YILDIZ TEKNİK ÜNİVERSİTESİ
FEN BİLİMLERİ ENSTİTÜSÜ

BETONARME YÜKSEK YAPILARIN TAŞIYICI SİSTEM ANALİZİ

İnşaat Müh. Özlem VARDAR

FBE İnşaat Mühendisliği Anabilim Dalı Mekanik Programında Hazırlanan

YÜKSEK LİSANS TEZİ

Tez Danışmanı: Doç. Dr. Asım GÜRALP (YTU)

Prof. Dr. Mehmet Omurtag

Prof. Dr. Faruk Yükseler

İSTANBUL, 2005

ÖNSÖZ

Yeryüzünün üçte ikisi sularla kaplıdır. Geri kalan toprak parçasının içinde ormanlar ve maden yatakları olduğunu düşünecek olursak insanoğlunun bina yapacağı alanın çok kısıtlı olduğu aşikârdır. Diğer yandan yollar, sportif alanlar ve diğer genel kullanım alanlarında bu kullanılabilir alana dâhil olacağından geriye daha da kısıtlı bir alan kalmaktadır. Bu mevcut kullanılabilir alanı artırmanın tek yolu katlı binalar yapmaktır. Nitekim de nüfus artışı, toplumlardaki değişimler, teknolojideki ilerleme yapım alanının azalışı gibi etkenlerden dolayı yüksek yapılara yönelim olmuştur.

Bu tez çalışmasındaki amaç Betonarme yüksek yapılarda alternatif taşıyıcı sistem araştırması yapmaktır. Ayrıca; taşıyıcı elemanlarda alternatif malzeme kullanımını araştırmaktır. Örnek olarak alınan 40 katlı betonarme bir yapıda kolon-kiriş ve perdeli bir sistemi malzeme kullanımı bakımından karşılaştırılmıştır.

Çalışmalarım sırasında değerli bilgi ve tecrübelerini benden esirgemeyen Saygıdeğer hocam Doç.Dr. Asım Güralp'e teşekkür ederim. Ayrıca mimari proje temininde katkılarından dolayı inşaat müh. H.Taylan Akgün, İnşaat müh. Oğuz Üner'e ve destekleri için aileme teşekkürlerimi sunarım.

İÇİNDEKİLER

SİMGE LİSTESİ

A_0	Etkin yer ivme katsayısı
A_t	Birinci doğal titreşim periyodunda kullanılan eşdeğer alan
C_t	Eşdeğer deprem yükün yönteminde 1.doğal titreşim periyodunun yaklaşık olarak Belirlenmesinde kullanılan katsayı
d_i	Binanın i'inci katında deprem yüklerine göre hesaplanan yer değiştirme
E	Elastisite modülü
E_C	Betonun elastisite modülü
E_f	Liflerin elastisite modülü
E_K	Kompozit malzemenin elastisite modülü
E_M	Matrisin elastisite modülü
f_c	Beton karakteristik mukavemeti
f_s	Donatının karakteristik mukavemeti
G	Kayma modülü
H_N	Binanın temel üstünden itibaren ölçülen toplam yüksekliği
h_i	Binanın i'inci katının yüksekliği
I	Yapı önem katsayısı
l_0	İlk boy
M	Perde deprem momenti
M_K	Perdelerde bağlı olduğu kirişlerin deprem momentlerinin toplamı
M_r	r'inci doğal titreşim moduna ait modal kütle
M_{xr}	Göz önüne alınan x deprem doğrultusunda binanın r'inci doğal titreşim modundaki kütle
M_{yr}	Göz önüne alınan y deprem doğrultusunda binanın r'inci doğal titreşim modundaki kütle
N_g	Yapı tarafından binanın temeline aktarılan sabit yük
N_q	Yapı tarafından binanın temeline aktarılan hareketli yük
n	Hareketli yük katsayısı
P	Birim boy veya alana etkiyen toplam yük
P_n	Kırılma anında elemanın taşıyacağı yük
R	Yapı tipi katsayısı
$R_a(T)$	Deprem yükü azaltma katsayısı
S (T)	Spektrum katsayısı
T	Bina doğal titreşim periyodu
T_1	Binanın birinci doğal titreşim periyodu
T_A	Spektrum karakteristik periyotları
T_B	Spektrum karakteristik periyotları
t	Kalınlık
V_f	Liflerin hacimsel oranı
V_t	Eşdeğer deprem yükü yönteminde göz önüne alınan deprem doğrultusunda binaya Etkiyen toplam eşdeğer deprem yükü (taban kesme kuvveti)
W	Binanın toplam ağırlığı
α	Açı
α_t	Lineer ısı katsayısı
γ	Poisson sayısı
Δ_i	Binanın i'inci katındaki göreli kat ötelenmesi
ε	Deformasyon
η_{bi}	i'inci katta tanımlanan burulma düzensizlik katsayısı
η_{ki}	i'inci katta tanımlanan rijitlik düzensizlik katsayısı
Ø	Azaltma katsayısı

σ	Gerilme
σ_a	Akma sınırı gerilmesi
σ_b	Kopma sınırı gerilmesi
σ_{bem}	Basınç emniyet gerilmesi
$\sigma_{çem}$	Çekme emniyet gerilmesi
σ_E	Elastik sınır gerilmesi
σ_{eem}	Eğilme emniyet gerilmesi
σ_f	Liflerin çekme mukavemeti
σ_K	Kompozit malzemenin çekme mukavemeti
σ_M	Liflerin koptuğu andaki şekil değiştirme için matristeki gerilme
σ_p	Orantılılık sınırı

ŞEKİL LİSTESİ

ÇİZELGE LİSTESİ

ÖZET

Yeryüzünde bina yapmak için kullanılabilir alanların kısıtlılığına karşın nüfus yoğunluğunun giderek artması çok katlı yapıları kaçınılmaz kılar. Zira mevcut kullanılabilir alanı artırmanın tek yolu budur.

Bu çalışmadaki hedef, betonarme yüksek yapılarda alternatif taşıyıcı sistem ve malzeme kullanımını araştırmaktır. Örnek alınan 40 katlı bir betonarme bina kolon-kiriş ve perdeli bir sistem olarak tasarlanmış ve karşılaştırılmıştır.

Sonuçta perdeli sistemin, kolon - kiriş sistemli taşıyıcı sisteme göre daha rijit ve daha ekonomik olduğu görülmüştür.

Anahtar Kelime: Çok katlı betonarme yapılar, alternatif taşıyıcı sistem ve malzeme kullanımı

ABSTRACT

Construction of multi level buildings is an inevitable fact as there are not enough lands to meet the residence demand of the increasing population density because the only way to increase the present serviceable lands.

The object to be reached by the means of this study is to research the use of alternative carrier system and materials in high constructions. A 40 floored concrete building was taken as a model and designed in two different forms as column-beam and curtain systems and a comparison was made between these two systems.

As a result it was determined that the curtain system is more rigid and cheaper than the column-beam carrier system.

Key words: Multi level concrete buildings, the use of alternative carrier system and materials

GİRİŞ

İnsanın doğasında var olan barınma ve korunma hissi ile yapılar oluşturulmaya başlanmıştır. Çeliğin yüksek fırınlarda üretimiyle başlayan endüstri devrimine gelinceye kadar az katlı olarak yapılan yapılar, 19. yüzyıl sonlarından başlayarak düşey yönde gelişmeye başlamıştır. İnşaatın ilk adımı olan proje hazırlama aşamasından itibaren amaç denge, stabilite, mukavemet, ekonomi ve estetiği bir arada uygulamaktır.

Yapıların kat sayısı arttıkça yüksekliğe uygun, deprem bölgelerinde gereken sünek davranışı gösterebilen, yapının mimari fonksiyonlarını aksatmayan, imalatının kolay olduğu, ekonomik, uzun ömürlü özel ekipman gerektirmeyen, kontrolü kolay, kısa zamanda gelir getiren ve kendi maliyetini karşılayabilen en uygun malzemeyi belirlemek, yapım şeklini seçmek ve ülke gerek ve gerçekleriyle uygun tasarımı yapmak gerekir.

Yüksek yapılarda ekonomik çözüm için yapı malzemesi olarak bazen çelik bazen betonarme istenen olumlu cevabı vermektedir. Elastisite modülünün yüksek oluşu, büyük açıklıklarda kullanımı, inşaat süresinin kısalığı, yapının özağırlığını büyük ölçüde hafifletmesi çeliğin olumlu nitelikleridir. Yüksek sıcaklıklarda elastisitesinin ve mukavemetinin hızlı düşüşü ve ayrıca su veya kimyasal maddeyle ilişkisiyle korozyona uğraması sakıncalı niteliklerini oluşturur. Betonarmenin ise yangın dayanımı ve basınç dayanımının yüksek olması gibi olumlu çekme dayanımının düşük olması gibi olumsuz yanları vardır. Farklı malzemelerin birlikte kullanılması ile elde edilen Kompozit elemanlarda ise malzemelerin üstün yanlarından faydalanabilme olanağı vardır. Betonun basınç dayanımının yüksek olması, çeliğin ise çekmeye olan dayanıklılığı sayesinde kompozit kesitlerde yalın çelik kesitlere nazaran daha ekonomik ve daha küçük sehim sonuçlarına varıldığı görülmektedir. Ülkemizde kullanılan taşıyıcı sistem malzemeleri ise kâgir, betonarme, ahşap ve çeliktir.

1. TAŞIYICI SİSTEMİNİN OLUŞTURULMASINDA KULLANILAN MALZEMELER

1.1 Tabii Malzemeler:

1.1.1 Ahşap:

Ahşap, insanlar tarafından kullanılan en eski yapı malzemelerinden biridir. Önceleri deneyime dayalı olan uygulama, mühendislik bilimlerindeki ilerlemelere paralel gelişen yapı tekniğiyle bilimsel olarak yapılmaya başlandı. Birleşim araçlarının da teknolojiyle birlikte gelişmesiyle beraber ahşap yapının yaygınlaşmasına sebep olmuştur. Ufak yüzeylerden büyük kuvvetler aktarabilen modern kamaların bulunuşuyla ahşap yapı tekniği daha da gelişmiş köprü kirişi gibi ağır taşıyıcı elemanları dahi ahşap malzemeden yapma olanağı elde edilmiştir. Özellikle, son senelerde geliştirilen sentetik tutkalın birleşim aracı olarak ahşap yapıya girmesi, her türlü yapı şeklini ahşap malzeme ile inşa etme olasılığını ortaya koymuştur. [1]

Ahşap malzeme hangi türden gelirse gelsin kimyasal bileşiminin %60'ını selüloz, %28'ini linyin ve %12'sini diğer maddeler oluşturur. Ağacın iç bünyesi iki kısımdan oluşur;

- Halis ağaç (Öz odun)
- Obiye (Diri odun)

Halis ağaç koyu renklidir ve ağacın sert kısmını oluşturur. Obiye ise ortada bulunan halis ağaç kısmının etrafında yer alan açık renkli kısmıdır. Herhangi bir ağacı enine kestiğimizde iç içe oluşmuş halkalar, gövdesi boyuna doğrultuda ince uzun içi boş boru demetleri şeklinde liflerin olduğu görülür.(resim 1.1)Ahşabın bu liflerini Selüloz oluşturmakta olup boyları 1- 6 mm, çapları ise boylarının 1/100'ü civarındadır. Linyin bu boruların dış cidarını oluşturmaktadır. Lifler birbirlerine pektin denilen madde ile bağlıdırlar. . Her yıl ağaca yeni bir halka eklenir ve bu halkalar obiye kısmında bulunmakta olup bu halkalara yaş halkaları denir. Yaş halkasının içinde gevşek ve açık renkli ilkbahar, dış kısmında ise sıkı yapılı koyu renkli yaz halkaları bulunur. Yaş halkası genişledikçe ilkbahar halkası iğne yapraklılarda genişler, yapraklılarda değişmez. Bundan dolayı yapraklılar daha mukavemetli ve daha kalitelidir. Ahşap doğal bir Kompozit malzemedir.

---

[1] Odabaşı,Y., 1997, Ahşap ve Çelik Yapı Elemanları

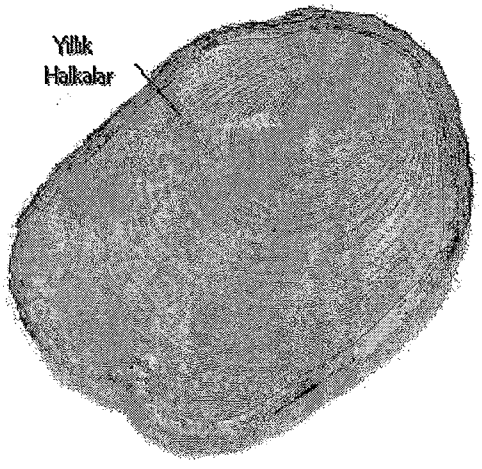

Resim 1.1 Ağacın içyapısı

Doğada bulunan ağaçlar ikiye ayrılır. İğne yapraklı ağaçlar (Gymnosperme) olup bunlara örnek çam, ladin, göknar verilebilir.(resim 1.2) Diğer tür ise Yapraklı ağaçlar (Dicotyledone) olup bunlara da örnek olarak meşe, gürgen, kayın verilebilinir.(resim 1.3)

Resim 1.2 Sarıçam

Resim 1.3 Meşe

Doğal ve heterojen bir malzeme olan ahşabın deneylerle belirlenen başlıca mekanik özelliklerini Basınç, Çekme, Eğilme, Dinamik eğilme oluşturmaktadır. Fakat bu mekanik özellikler rutubet ve iç bünye yapısına bağlı olarak değişir. Lif doğrultuları, rutubet özgül ağırlık ve yıllık halkalar bu mekanik özelliklerine etkiyen iç bünye yapılarıdır.

- Lif doğrultusu özellikle basınç mukavemetine etkiyen iç bünye yapısıdır. Basınç mukavemeti liflere paralel olursa en yüksek değerini, dik olursa eğer en düşük basınç mukavemetini verir.
- Rutubet ise bütün mukavemet değerlerine etkir. Ve daima mukavemetle rutubet ters orantılıdır. (şekil 1.1)Ahşabın içinde özsu ve serbest su olmak üzere iki tür su olup rutubeti serbest su oluşturur. Yeni kesilen bir ağaçta rutubet % 45- 50 civarındadır. Ormanda veya çatı altında bekletmek suretiyle rutubet düşürülebilmektedir ancak malzemenin tam kuru olabilmesi için 100- 105 C ^{0} de ağrılığı sabit bir değere ulaşıncaya kadar bekletmek gerekmektedir. Ahşaptaki rutubet değeri şu şekilde hesaplanır;

(%) olarak rutubet = [(yaş ağırlık – kuru ağırlık) / kuru ağırlık] . 100 (1.1)

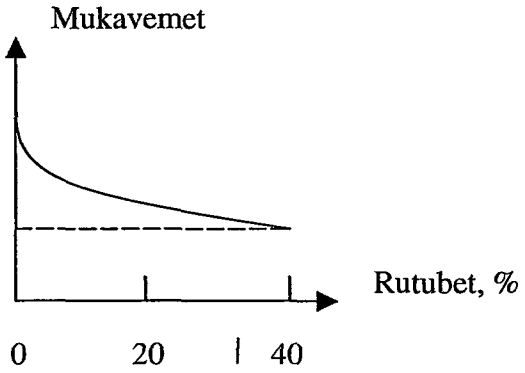

Şekil 1.1 Ahşapta rutubet oranının mukavemete etkisi

- Özgül ağırlık arttıkça mekanik özellikler daha iyidir ki bu durum reçineli ağaçlarda çok daha belirgindir.
- Yıllık halkalar ise halka genişliği olarak mukavemete etkir. Zira eğilme mukavemeti, kuvvetin doğrultusunun yıllık halkalara göre durumu, radyal ve teğet olması haline göre oldukça değişik sonuçlar olmasına neden olur. Eğer yükleme yıllık halkalara teğet olursa en düşük eğilme mukavemeti sonucu oluşur.

Çizelge 1.1 ve 1.2'de sınıflarına göre gerilme ve elastisite modülleri görülmektedir.

Gerilme Türü	Emniyet Gerilmeleri (kg/cm^2)			
	İğne yapraklı			Yapraklı
	I	II	III	
Eğilme (σ_{eem})	130	100	70	110
Liflere paralel Çekme ($\sigma_{çem}$)	105	85	0	110
Liflere paralel Basınç ($\sigma_{bemı}$)	110	85	60	100
Liflere dik Basınç ($\sigma_{emı}$)	20	20	20	30

Çizelge 1.1Emniyet Gerilmeleri

Ahşap malzeme türü	Elastisite modülü (kg/cm^2)		Kayma Modülü (kg/cm^2)
	Liflere paralel ($E_{\parallel}$)	Liflere dik ($E_{\perp}$)	
İğne yapraklı	100 000	3 000	5 000
Yapraklı	125 000	6 000	10 000

Çizelge 1.2 Elastisite modülü ve kayma modülü değerleri

Ülkemizde yetişen ağaçlardan inşaat malzemesi olarak Çam sınıfı (Sarıçam, Karaçam ve Kızılçam) Göknar, Ladin, Sedir, Meşe ve Kayın kullanılmaktadır.

Binaların yapımında kullanılan yapı malzemeleri ülkenin doğal durumu ve bitki örtüsüyle yakın ilgilidir. Ülkemizde bölgelerin farklılıkları sebebiyle farklı tür yapı malzemelerinin kullanıldığı görülmektedir. Örneğin Akdeniz, Ege ve Karadeniz'de ahşap evler görülürken Kayseri'de taş işçiliğinin gelişmişliği nedeniyle kerpiç ve ahşap malzemeli evler görülmektedir. Genel olarak Ülkemizde Geleneksel yapı malzemesi Marmara ve Karadeniz'de Ahşap, Doğu ve Güneydoğu Anadolu'da Taş, İç Anadolu'da Kerpiç ve taş, Ege ve Akdeniz'de ahşap ve taş olarak görülmektedir.

Ahşap Kompozit sistem tasarımında taşıyıcı eleman olarak ya da betonarme ya da doğal taşın taşıyıcı eleman olarak kullanıldığı yapılarda döşeme elemanı olarak kullanılabilir. Şekil 1.2'de görüldüğü gibi Düşey ve yatay taşıyıcıları (kolon ve kirişleri) olan Ahşap karkas yapılar çeşitli biçimlerde yapılmaktadır.

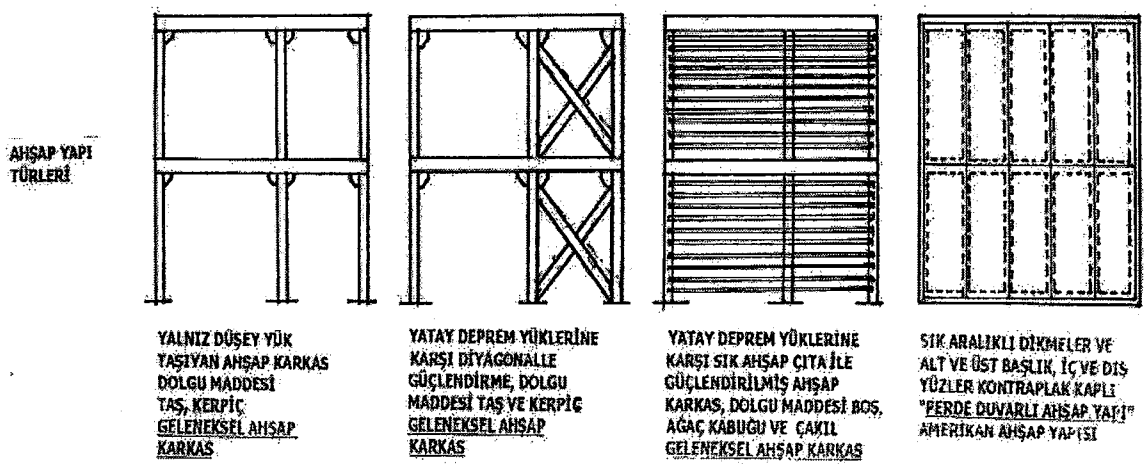

Şekil 1.2 Ahşap yapı türleri

Bazı ahşap karkas yapılarda dikmeler arasındaki Aralıklar 1.00 metre kadar olurken bazılarında 2–3 metre ya da dikmeler yalnız yapı köşelerinde olmaktadır. Dikmelerin arası taş, kerpiç ve tuğla yerleştirilerek bir duvar oluşturulmaktadır. Nerdeyse düşey yükleri bile taşıyamayacak bir ahşap çerçeveden oluşan bu yapıların deprem dayanımları çok sınırlıdır.(resim 1.4) Zayıf bir ahşap "çerçeve"den oluşan bu yapıların yetersizliği 1940'lı yıllarda Kuzey Anadolu Fayı üzerinde ve başka ülkelerde olan pek çok depremde gözlenmiş ve ahşap dikmelerin çift yönde X-biçiminde diyagonal ya da çapraz elemanlarla güçlendirilmesi gereği ortaya çıkmıştır. Bu yapılarda da duvar dolgu maddesi olarak taş, kerpiç ve tuğla kullanılmıştır.

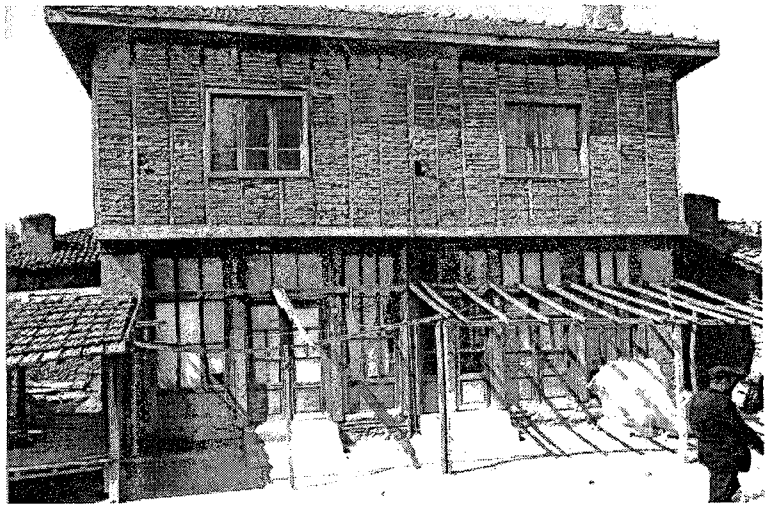

Resim 1.4 Çapraz (diyagonal) elemanları olmayan bir ahşap yapı

Taş olarak doğal kesme taşlar kullanılmıştır. Kerpiç ise toprağa çimento, kireç, alçı ve diğer bazı katkı maddeleri katılımıyla elde edilen kerpiç çamurlarının kalıplarda bir süre kendisini çektikten sonra kurumaya bırakılmasıyla elde edilmiş bir yapı malzemesidir. (resim 1.5) zaten tuğlada kerpiçin ömrünün kısalığı ve çabuk bozulması nedeniyle killi toprağın pişirilmesi suretiyle elde edilip teknolojiyle beraber zamanla gelişmiş bir yapı malzemesidir.

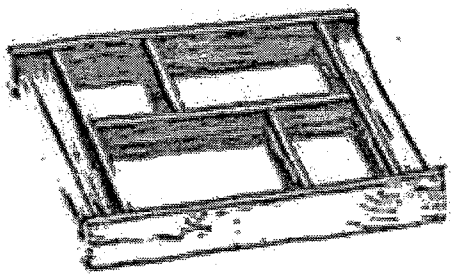

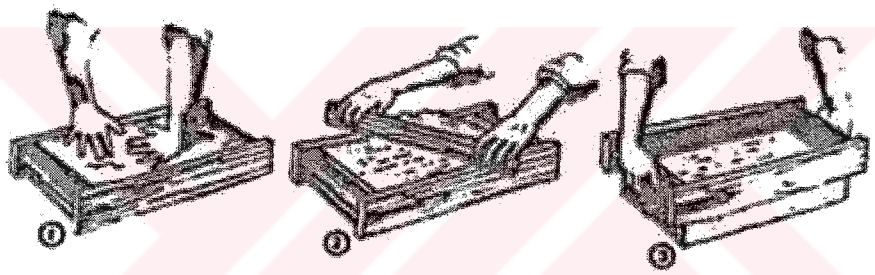

Kerpiçin kalıba yerleştirilmesi, yüzeyinin düzeltilmesi ve kalıptan çıkarılması

Resim 1.5 Kerpiç yapımı

Ahşap yapıların olumlu ve olumsuz bir takım özellikleri vardır. Olumlu yönlerini sayacak olursak;

- Ahşap yapılar hafif oldukları için çökme anında betonarme yapıya nazaran daha geniş bir yaşam alanı bırakır. Zira betonarme yapılar ağır oldukları için çökerken eşyaları ezmekte böylece insan hayatını kurtaracak olan yaşam alanını azaltmaktadırlar. $100m^2$ lik bir betonarme yapı 100 ton ağırlığındayken ahşap yapı sadece 10 tondur.
- Ahşap yapılar ekonomiktir.
- Ahşap yapılar insan sağlığına daha faydalıdırlar.
- Ahşap yapılar çevre, hava ve gürültü kirliliğine sebep olmazlar.

Bütün bunlara karşın olumsuz etkileri de vardır.

- Ahşabın zamanla mekanik özelliklerini yitirmesi, nedeni ile sehimleri artmakta, zamanla büzülmekte ve düşey yükler taşıyan elemanlarda bu büzülme daha da yoğun olması yatay ve düşey ahşap yapı elemanların birleşimlerinin açılmasına ve bağlantıların zayıflaması
- Akma gerilmesi ile kopma noktası arasındaki birim şekil değiştirmenin çok az olması
- Çelik kadar sünek olmaması
- Yangın tehlikesi

Bu olumsuz etkileri dolayısıyla Ahşap yapılar yaygın olarak kullanılmamaktadır. Ve ülkemizde Ahşap ustası giderek azalmıştır. Ancak teknolojin gelişimi ile birlikte Ahşap yapıların üretimi için ahşap yapı üretim tesisleri oluşturulmuş ve bu konuda ülkemizde de bu tür hizmetler veren tesisler kurulmaktadır.

1.1.2 Bambu - Kamış:

Bambu güçlü ve dayanıklı bir tür ot çeşididir. Sağlamlık, sertlik, esneklik, güç, çabuk olgunlaşma bambunun önde gelen özelliklerini oluşturur. Ayrıca içindeki Silikat yüksek yoğunluk özelliği kazandırır.

Bambu, meşeden %23, akça ağaçtan %13 daha sert olup ezilmesi, kalın yapraklı ahşaba göre daha zordur. Hatta çelik, beton ve ladinden daha güçlüdür. Çizelge 1.3'de Bambunun mekaniksel özellikleri görülmektedir.

Mekaniksel Değer	Sembol	Değer (psi)
Basınç taşıma gerilmesi		8,000
Kabul edilebilir basınç gerilmesi	σ	4,000
En son çekme dayanımı		18,000
Kabul edilebilir çekme gerilmesi	σ	4,000
Kabul edilebilir aderans gerilmesi	U	50
Elastisite modülü	E	2.5×10^6

Çizelge1.3 Bambu ile güçlendirmenin Mekanik özellikleri

Bir ağaç bir yılda % 3 – 5 arası büyürken, bambunun yıllık büyüme oranı %30'dur. Bu da Bambunun en çabuk gelişen bitkilerden olmasını sağlar. Diğer yandan hasat yapıldığında zarar görmez ve büyümeye tekrardan başlar. Bambu liflerinin tamamen olgunlaşması 3,5 yıl alır. Oysa ağaçlar 50 – 60 yılda kesilecek duruma gelir ve elde edilen lif henüz gençtir, dayanıklılığıda bambuya göre azdır.

Sabitlik bambunun başka bir avantajı olup genişleyip daralmıyor. Kızıl meşeden iki kat daha çok sabitlik özelliğine sahiptir.

Bambu mükemmel bir mobilya hammaddesi olup fırınlandıktan sonra preslenip istenilen ürünlere dönüştürülüyor. Günümüzde tavan kaplaması, panellerde, merdiven korkuluklarında, mobilyalarda ve daha birçok yerde bambu kullanılmaktadır. Ancak Bambu Asya'da, Pasifik adalarında, Güney ve Orta Amerika'da bina yapımında kullanılır ki kalın olan bu bambu çeşidine de "Moso" denilmektedir. Hızlı büyümesi, çabuk olgunlaşması, sertliği, esnekliği ve güçlü olması, yapı malzemesi olarak tercih edilmesini sağlar.(resim 1.6) Ancak tamamen bambudan oluşan yapılar yapmak zor bir iştir. Bambunun silindir şekli birçok marangozluk hesabı yapılmasını gerektirir. Bambuların farklı boyutları ve çeşitleri vardır bu sebepten dolayı da kullanılacağı yere göre kimyasal işlem uygulanması gerekir. Ve ayrıca bambu Çin ve Vietnam'dan ithal edilebilmektedir. Bambunun inşaatta kullanımı tüm dünyaya yayılmaktadır. Daha çok çatıda kullanımı yaygındır. Bambunun gücü ve kalitesi hakkında araştırmalar halen devam etmektedir. Laboratuarlarda bambuyu sınıflandıran sistemler ve inşa kodları geliştirilmeye çalışılıyor.

Resim 1.6 Bambu

Bambunun çelik gibi çekme dayanımının yüksek oluşundan dolayı çelik gibi çalıştırılabileceğine dair 1966 yılında Francis E.Brink ve Paul J.Brush tarafından yayınlanan makalelerini görmekteyiz. Her ne kadar raporda sonuçlar ve tavsiyeler bildirilse de tam bir düşüncenin oluşabilmesi için daha büyük çaplı araştırmaların olması gerektiği eklenmiştir.

Bambunun donatı olarak kullanılabilmesi için diğerlerinden onu ayıran şu özellikleri bulundurması gerekmektedir;

- Sadece bambu belirgin bir kahve renk gösterir.
- En uzunu ve en büyük çaplısı elde edilmelidir.
- Yeşil renkli bambu kullanımından kaçınılmalıdır. Zira bambu mevsimi olmadığı anlaşılır.
- Liflerinde nem fazlayken daha güçlüdürler bu nedenle ilkbahar ve yazın ilk aylarında kesilmemelidir.

Bambunun donatı olarak kullanımı değişik inşaatlar için ve kırsal bölgelerde kullanımda alternatif sunmaktadır. Zira yapılan araştırmalarda bambunun donatı olarak kullanımı ekonomik sonuçlar verdiği görülmektedir. Kirişler, kolonlar ve döşemler için elde edilmiş tablolar aşağıda görülmekte olup bunlar ¾ inç lik ve bütün çapa ait sonuçlar olarak ayrı ayrı verilmiştir.(Çizelge 1.4)

Bütün	
Çap (in.)	Alan (sq. in.)
3/8	0.008
1/2	0.136
5/8	0.239
3/4	0.322
1	0.548
2	1.92

3/4 Inch	
Kalınlık (in.)	Alan (sq. in.)
1/8	0.094
1/4	0.188
3/8	0.282
1/2	0.375
5/8	0.469
3/4	0.563

Çizelge 1.4 Bambu donatılarına ait özellikler

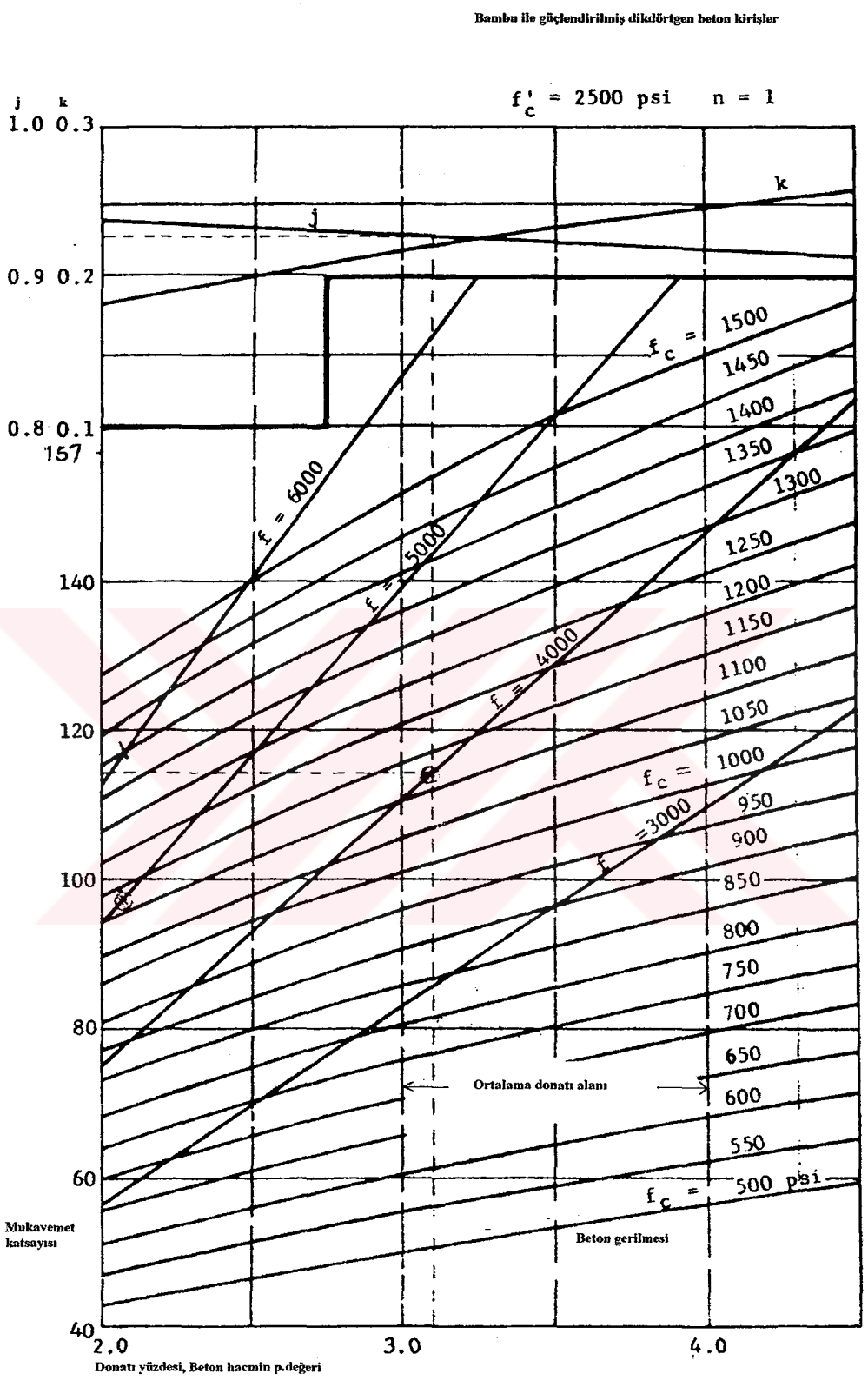

Şekil 1.3 Bambu ile güçlendirilmiş beton kirişlerin ve bükülebilir elemanlarının mukavemet katsayıları

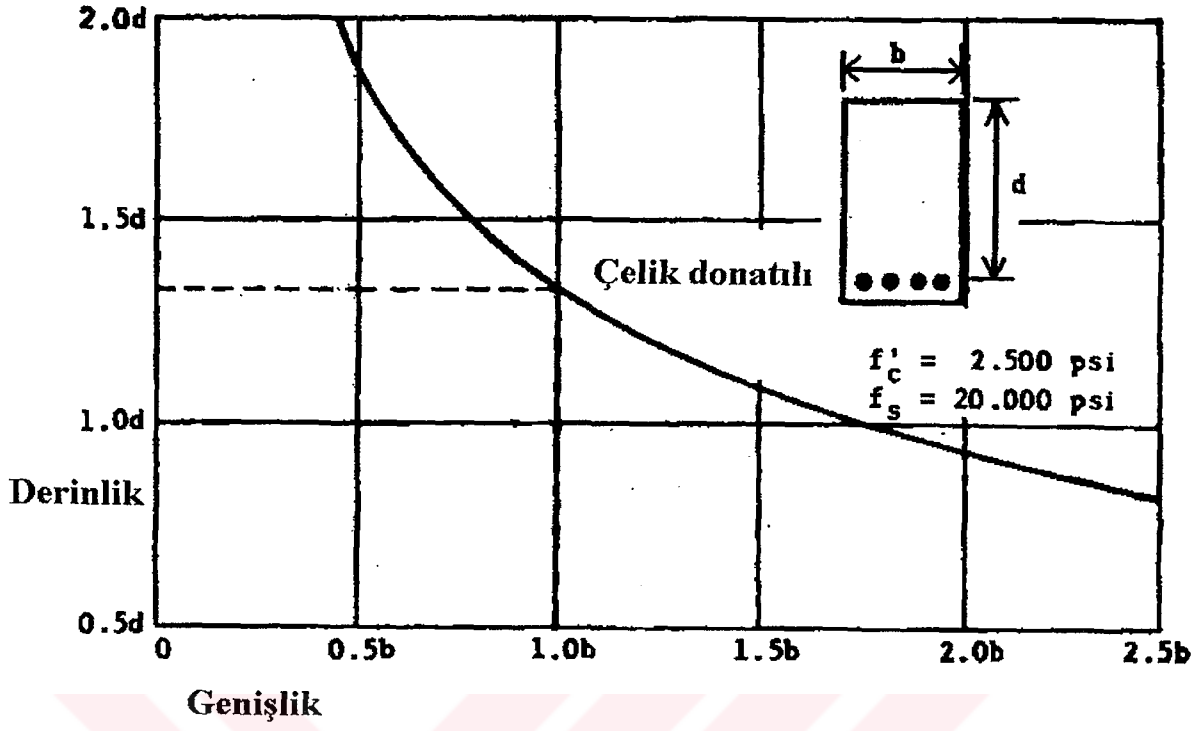

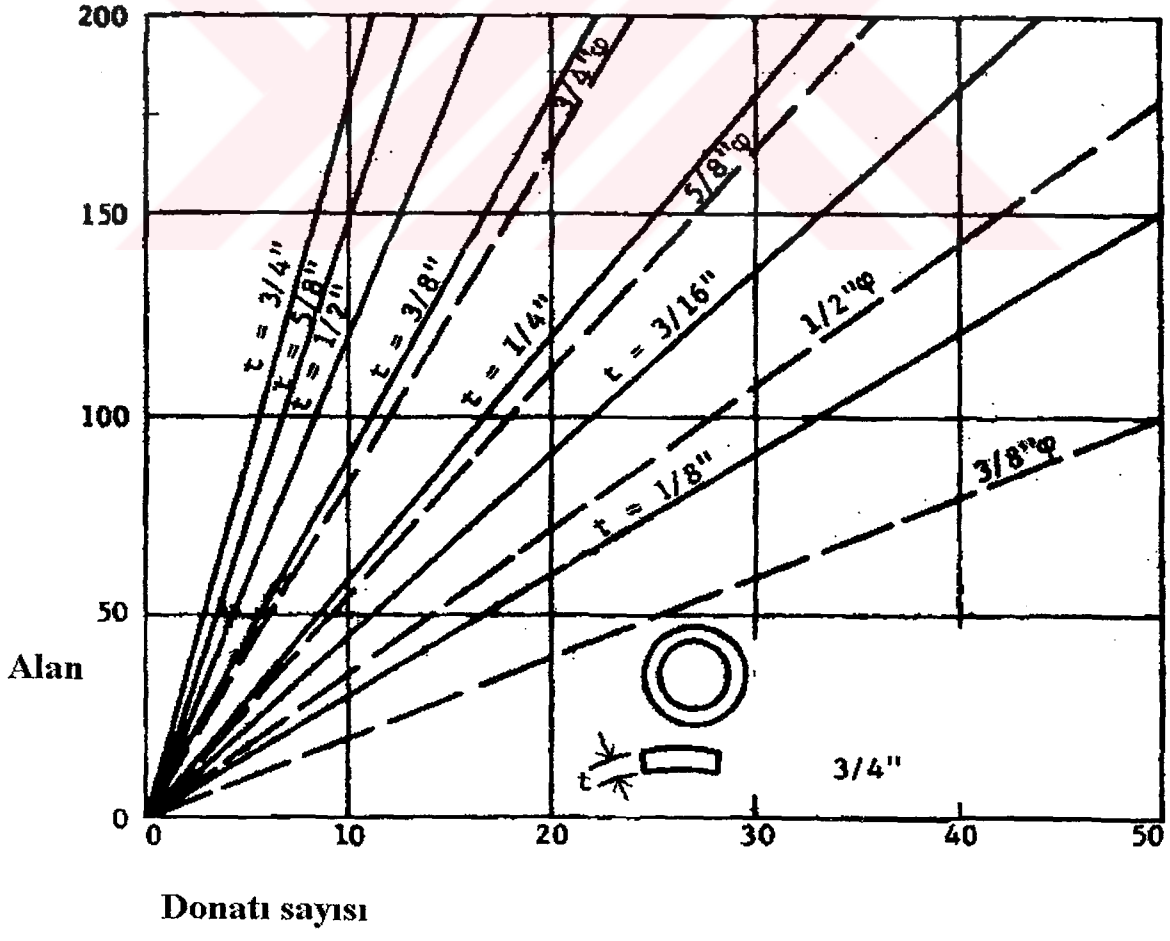

Şekil 1.4 Bambu donatılı kirişler

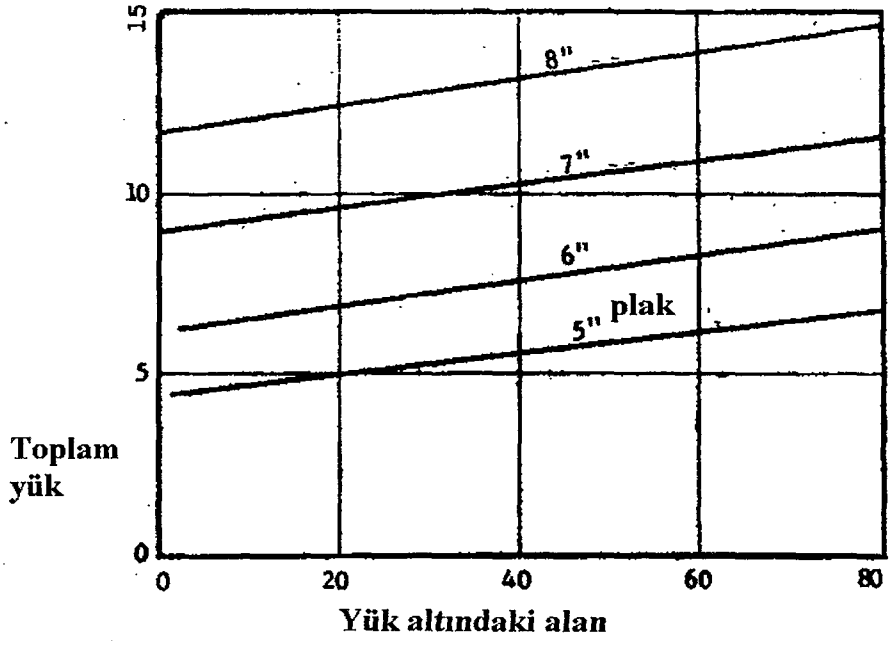

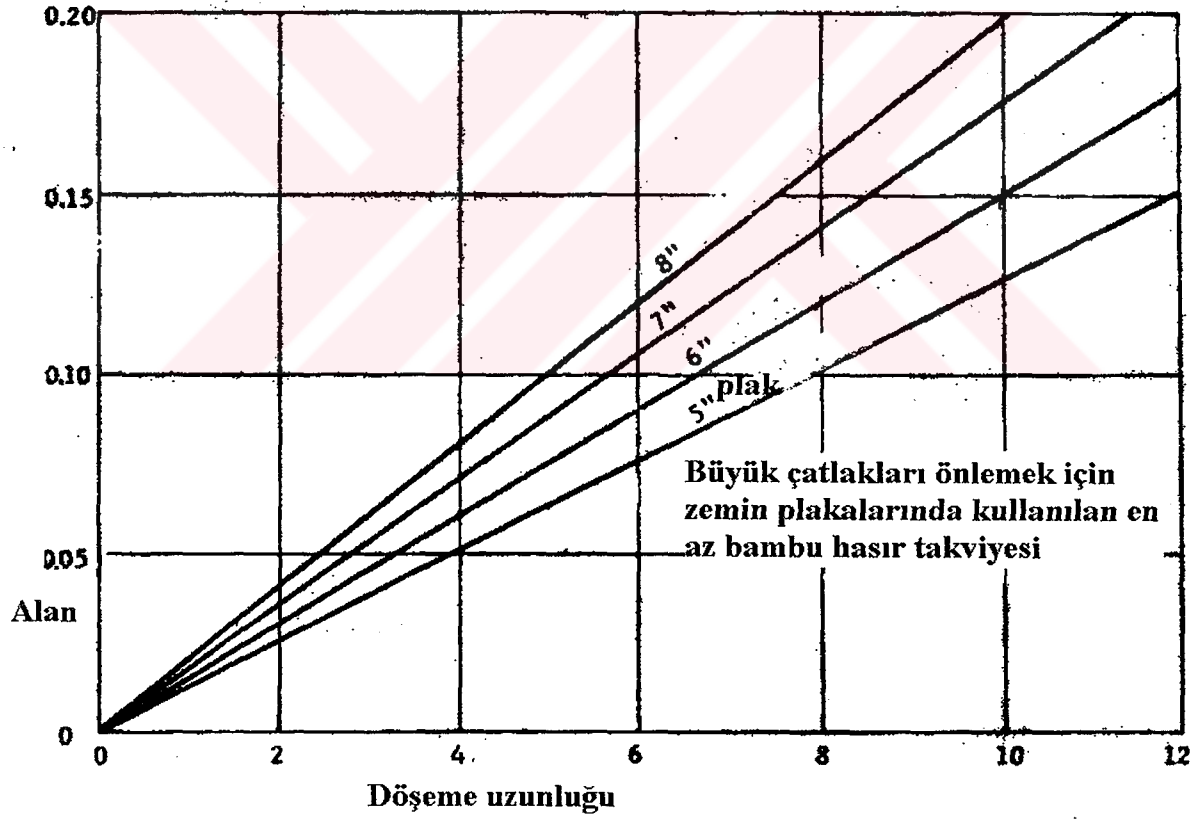

Şekil 1.5 Zemine oturan döşemelerin plak kalınlık tasarımı

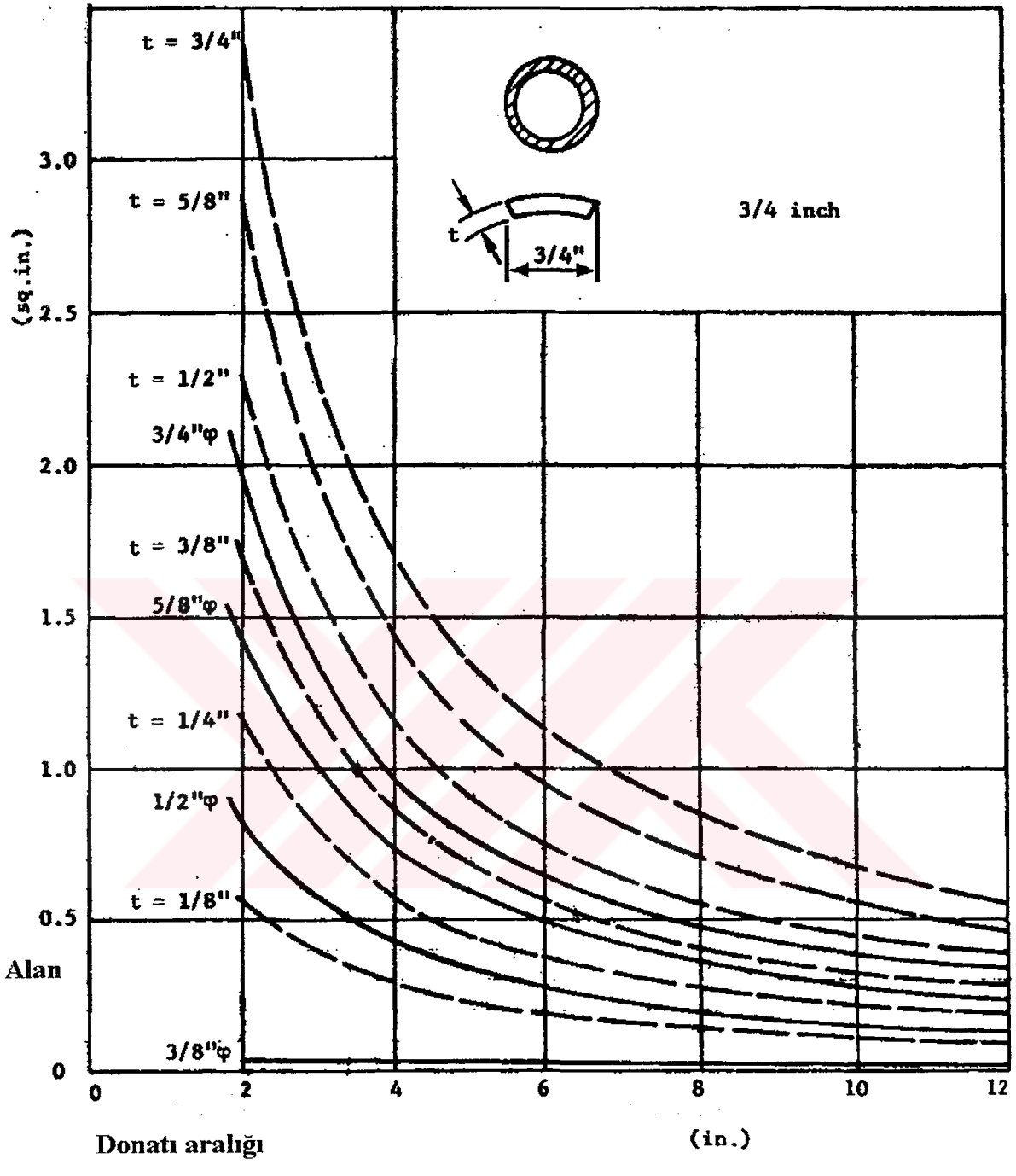

Şekil 1.6 Plaklarda ve duvarlarda bambu güçlendirmenin çapı ve yerleştirilmesi

Memleketimiz açısından bambu temini biraz zor ve pahalı olduğu için bizim önerimiz bambu yerine kamışın betonda donatı yerine kullanılması ve yaygınlaştırılmasıdır. Zira köylerde yapılacak tek katlı veya iki katlı evlerin döşemelerinin beton-kamış donatı sistemiyle yapılması maliyeti oldukça düşüreceği kanısındayız.

1.1.3 Elyaf (Kendir):

Üretimi çok eski tarihlere dayanan ve çok çeşitli kullanım alanı olan kendir, doğal bir tür elyaftır. Kendir, yurdumuzun birçok bölgelerinde yetişen sınaî bir bitkidir. Elyafı dışında, tohumundan da yağ üretimi yolu ile faydalanır. Genellikle kendir elyafından halat, ip, sicim üretilir; iklimi sayesinde ise Rize de yetişeninden elde edilen liflerden gayet ince iplik bükülebilmekte ve bununla da gayet ince, nefis bezler dokunabilmektedir. Bize verilen teknik bilgiye göre, Rize ikliminin az güneşli ve çok yağmurlu oluşu, liflerin sertleşmesine engel olmaktadır. Kastamonu'dakinin halat yapımına, Rize'dekinin ince iplik ve bez dokumasına yararlı oluşu, bundan doğmaktadır. Diğer yandan kendir sıhhi tesisatçılıkta kullanılmakta olup eski devirlerde binalarda kullanımı görülmektedir.

İnşaat sektöründe kendir elyafı ince ince kıyılarak 5–6 cm büyüklüğe getirilerek sıvaların harçlarının içine konur. Bu kendir elyaflı sıvada oluşacak yüzeysel gerilmeleri aldığından çatlamaları önleyici eleman olarak kullanılır. Daha ileri bir düşünceyle betonda kullanılması şapların rötre çatlaklarını alması şeklinde kullanılabilir. Çok fazla yük taşınmayan döşemelerde, duvar kaplamalarında yer betonlarında betonunda kullanılması bir nevi armatür yerine geçebilir. Hatta çatı kaplamalarında eternit vb. levha imalatında kaplamayı oluşturacak beton harcının içine konularak oluklu eternit (kiremit...) dahi yapılabilir. Ayrıca köylerde ucuz konut yapımını sağlamak için saman yerine kendir elyafı ince ince kıyılarak (4–5 cm) çamurun içine karıştırılarak yapılan tuğla (kerpiç) imalatında kullanılması daha başarılı olacağı kanısındayız. Çünkü samana göre kendir aderansı (yapışma özelliği) daha fazladır.

1.2 Suni Malzemeler:

1.2.1 PVC:

Endüstride çok çeşitli malzeme türleri vardır. Ve her geçen gün sayısı artmakta olup bunları yapı ve benzer özelliklerin bir arada bulunduğu sınıflara ayırarak incelenir. Ve buna göre atomlar arası bağ türlerine göre malzemeler üç sınıfa ayrılırlar;

1- Metaller
2- Seramikler
3- Plastikler

Metal atomlarının metalsel bağ oluşturmasıyla metaller, metal ve metal olmayanların iyonsal bileşiklerinden seramikler, metal olmayan elemanların kovalent bağlarıyla da plastikler oluşur.

Plastiklerin ana elemanı karbon olup bunun yanında çoğunlukla Hidrojen, Klor, Flor, Azot ve kükürt bulunabilir. Plastikle (polimerler) kovalent bağın sürekliliği ve atomların diziliş biçimlerine göre iki tür moleküler yapıya sahiptirler. Lineer polimerler birinci sınıfı oluşturup bir boyutta zincir zayıf bağlardan meydana gelmişlerdir ısıtılınca yumuşarlar, soğuyunca tekrar sertleşirler ve tekrar kullanılabilirler. Endüstride bunlara termoplastikler denir. Bunlara örnek olarak polietilen, polivinilklorür (PVC) ve polistiren gösterilebilir. Uzay ağı denilen ikinci tür yapıda üç boyutlu uzayda sürekli kovalent bağ ağı oluştururlar. (şekil 1.7 ve şekil 1.8) Bunlar ısıtılma ile yumuşamazlar ve aşırı ısınmada kopma oluşturduklarından tekrar kullanım imkânları yoktur. Bunlara da termoset plastikler denilir. Çizelge 1.5 de bazı termoplastiklerin çizelge 1.6 da ise bazı termosetlerin özellikleri verilmiştir. Şekil 1.9 de lineer polimerlerin metal ve kauçuğa nazaran gerilme şekil değiştirme hali gösterilmiştir.

```
C     =     C
\   /       \   /
 C           C
/   \       /   \
```

Şekil 1.7 Lineer polimerlerde oluşan zincir diziliş

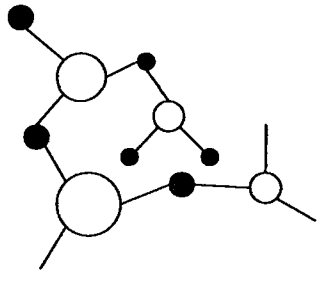

Şekil 1.8 Uzay ağı türü moleküler yapı

Malzeme	Özgül ağırlık Mg/m^3	Çekme mukavemeti MPa	Elastisite modülü MPa	Kullanma sıcaklık sınırı ^0C
Polietilen (düşük özgül ağırlık)	0,92-0,93	7–17	105–280	80
Polietilen (yüksek özgül ağırlık)	0,95-0,96	20–37	420–1260	100
Polivinilklorür (PVC)	1,5-1,58	40–60	2800–4200	110
Polipropilen (PP)	0,90-0,91	50–70	1120–1500	105
Polistiren (PS)	1,08-1,10	35–68	2660–3150	85
Akronitril – Bütadien – stiren (ABS)	1,05-1,07	42–50	-	75
Polimetilmetakrilat (PMMA)	1,11-1,20	50–90	2450–3150	125
Politetrafloretilen (Teflon)	2,1-2,3	17–28	420–560	120
Naylon 6.6	1,06-1,15	60–100	2000–3500	82
Selülozikler	1,2-1,3	20–50	-	60

Çizelge 1.5 Bazı termoplastiklerin özellikleri

Malzeme	Özgül ağırlık Mg/m^3	Çekme mukavemeti MPa	Elastisite modülü MPa	Kullanma sıcaklık sınırı ^0C
Fenolikler	1,27	35–60	2800–9200	170–250
Polyesterler	1,28	42–95	2100–4600	150–175
Epoksiler	1,25	28–90	2800–3500	150–260
Melamimler	1,5	35–70	7000–11200	150–200

Çizelge 1.6 Bazı termoset plastiklerin özellikleri

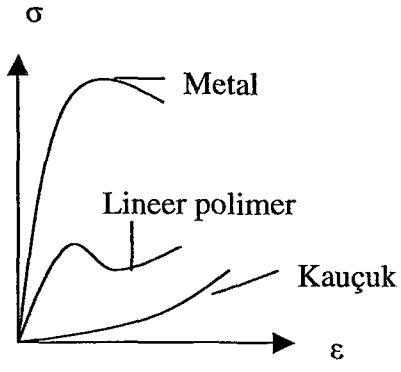

Şekil 1.9 Metallerin ve polimerlerin gerilme-şekil değiştirme eğrileri

Polimerlerin ısıl ve elektriksel iletkenlikleri düşüktür ve yalıtım malzemesi olarak kullanılırlar.

PVC kısa adıyla bilinen polivinilklorür polietilenden sonra en çok kullanılan plastik türü olup oldukça ucuzdur. Mukavemeti yüksek, kimyasal etkilere ve aşınmaya dayanıklıdır. Alevle yanmaya karşıda dirençleri vardır. Döşeme kaplamaları, boru hortum, yapay deri üretiminde elverişlidirler ve son yıllarda kapı, pencere malzemesi olarak büyük ölçüde kullanılmaktadır. Diğer yandan sertleştirilmiş PVC veya HDPE son on yıldır özellikle Kanada ve Polonya gibi ülkelerde taşıyıcı sistemlerde kullanılmaya başlanmıştır. PVC'den oluşan kabuk içine çok az donatı koyarak ve ince granülometriye sahip bir beton dökülmek suretiyle yapılır. Elbette ki yararlı ve zararlı yanları vardır.

PVC nin taşıyıcı sistemde kullanılmasının faydaları şunlardır;

- Hafif yapı olmasından kaynaklı depreme karşı avantaj sağlar
- Kalıp kullanımını ortadan kaldırdığı için maliyeti düşürür
- İnşaat süresini kısaltır

Şimdide zararlı yanlarına bakacak olursak;

- Ülkemizde bu konuda yetişmiş eleman son derece sınırlıdır
- PVC' nin uzun dönem ültraviyole dayanımı düşüktür. Ki bu sebepten dolayı kuzey ülkelerinde tercih edilir.

- Mevcut bir Türk standardı olmadığından yürürlükteki mevzuata uygun şekilde bir imalat yapılması güçtür.

1.3 Kompozit Malzeme:

Birbirinin zayıf yönlerini takviye ederek üstün özelliklere sahip malzeme elde etmek amacıyla değişik tür maddeden oluşan malzemeye **Kompozit malzeme** denir. Donatılı veya pekiştirilmiş malzeme ismi ile de anılırlar. Çelik donatılı beton elemanlar Kompozit malzemeye örnek olarak gösterilebilir. Kompozit malzemeler bileşenin türüne ve düzenleme biçimine göre üç gruba ayrılabilirler; Taneli kompozitler, lifli kompozitler ve tabakalı kompozitler. (şekil 1.10)

Şekil 1.10 Kompozit malzemede yapı türleri: 1 – Taneli yapı 2 – Lifli yapı 3 – Tabakalı yapı

Doğada Kompozit malzeme milyonlarca yıldan bu yana vardır. Bunlara doğal Kompozit malzemeler denilmekte olup örnek olarak ahşap ve bambu gösterilebilir. İnsan yapımı Kompozit malzemenin ilk örneğini ise samanla güçlendirilmiş çamur bloklar oluşturur. Antropologlar samanın yapı malzemesi olarak yaklaşık 40 000 yıldan beri kullanıldığını düşünmektedirler. Zira Mısır Türbelerinin içinde pek çok saman örneklerine rastlanılmıştır. Bugün halen köylere de kile yatırılmış sonradan ahşap kalıplarla şekillendirilmiş saman karışımı kullanılmakta olup Amerika da 1890lardan sonra kullanılmaya başlanılmış olup Nebraska da bir-iki katlı konutlar, kiliseler, çiftlik evleri, ofisler ve okullar günümüzde inşa etmektedirler. Buhar gücüyle çalışan balya makinelerinin gelişimi ile bu teknik yaygınlaşmış olup malzeme ve enerji kısıtlılığı ile zehirli maddelere karşı duyulan rahatsızlıktan dolayı bu tekniğin tercih sebebi olmasına neden olmuştur. Diğer yandan saman yapısındaki Selüloz nedeniyle oldukça güçlü bir yalıtım malzemesidir ve hatta

geleneksel yapı malzemelerimizden ahşap ve betona nazaran çok daha uygun bir seçenek oluşturmaktadır. (resim 1.7)

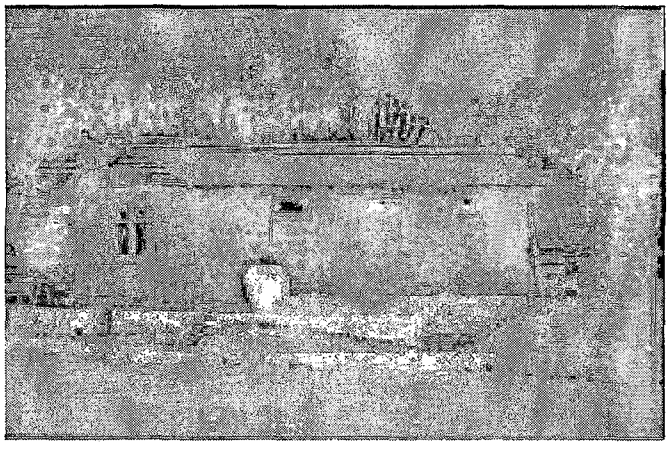

Resim 1.7 Saman balyasıyla yapılmakta olan bir yapı örneği

Kompozit malzeme imal tekniğinin gelişmesi ile beraber fiberle güçlendirilmiş polimer, seramik matris, karbon-karbon gibi yüksek nitelikli malzemeler elde edilmiştir ki bu üretimde birçok sektöre kolaylık sağlamaktadır. Örneğin Kompozit malzemenin mukavemetli, rijit ve hafif oluşu uzay ve havacılık endüstrisinde çok istenen bir cevaptır.

Kompozit malzemelerde özgül mukavemet (malzeme mukavemetinin malzeme yoğunluğuna oranı) ve özgül modül (elastisitenin malzeme yoğunluğuna oranı) yüksektir. Çünkü Kompozit malzemelerde elastisite malzemelerin tek başlarına sahip oldukları elastisiteden daha fazladır. Bu durumu lifli yapıdaki bir Kompozit malzemede liflerin diziliş yönlerine göre açıklayacak olursak;

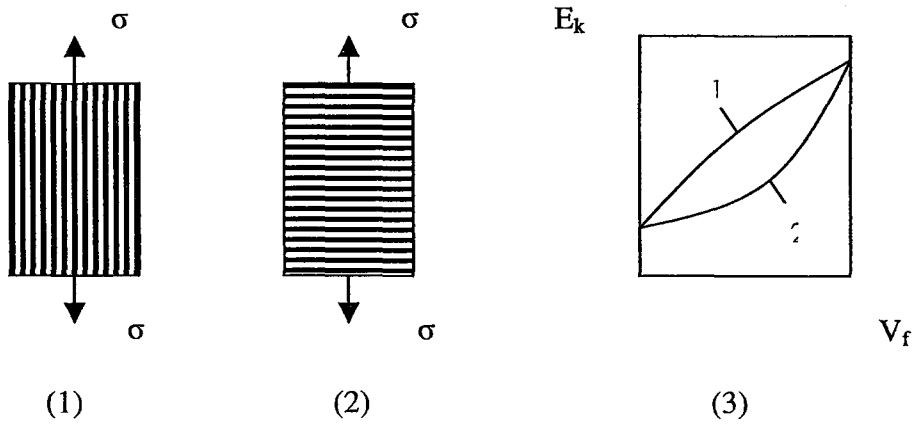

Şekil 1.11 Kompozit takviye yönüne göre elastisite : (1) Eşşekil değiştirme (2) Eşgerilme (3) Elastisite modülünün birleşim oranı ile değişimi

Takviye lifleri şekil 1.11 (1) de görüldüğü gibi uygulanan kuvvet ile aynı yönde olduğunda oluşacak şekil değiştirme aynı olacaktır ki buna eşşekil değiştirme denir. Ve buradan yola çıkarak Kompozit malzemenin elastisitesi hesaplanır. Matrisin elastisitesine E_m, liflerin elastisitesine E_f ve liflerin hacimsel oranına V_f dersek Kompozit malzemenin Elastisite modülü (E_k) (1.1) deki gibi olur.

$$E_k = E_f V_f + (1 - V_f) E_m \qquad (1.2)$$

Takviye lifleri şekil 1.1 (2) de görüldüğü gibi uygulanan kuvvete dik olduğu hallerde matris lifler aynı yükü taşıyacaktır. Eşgerilme hali denen bu tür yüklemeye karşın Kompozit malzemenin elastisitesi (E_k) (1.2) deki gibi olur.

$$E_k = (E_m E_f) / [(1 - V_f) E_f + E_m V_f] \qquad (1.3)$$

Kompozit malzemenin mukavemeti liflerin kopması ile sona erer. En uygun Kompozit yapısında lifler kuvvet doğrultusuna paraleldir. σ_f liflerin çekme mukavemeti, σ_m liflerin kopma anındaki şekil değiştirme için matristeki gerilme ve V_f ise liflerin hacimsel oranını gösterir. Buna göre Kompozit malzemenin çekme mukavemeti,

$$\sigma_k = \sigma_f V_f + (1 - V_f) \sigma_m \qquad (1.4)$$

Olur. Liflerin hacimsel oranı düşük ise lifsiz hale göre daha düşük bir mukavemet oluşacaktır. Eğer V_f yüksekse Kompozit malzemenin mukavemeti takviye miktarı ile beraber artacaktır.

Bütün bunlar bize gösteriyor ki Kompozit malzemelerde oluşan Elastisite artışı yerdeğişimin ve şekil değişiminin az olmasına ve böylece daha rijit malzemenin olmasına neden olur. rijitliği yüksek, mukavemetliliği artmış bir malzemede elbette çok istenir. Ancak Kompozit malzemelerde mukavemet artışı, rijitlik artışı ve hafiflik sağlamasının yanında bir takım mahsurlu yanları da vardır. Güçlendirici malzeme diğer mühendislik malzemeleri yanında daha pahalıdır. Diğer yandan Kompozit malzeme imali için gereken işçilik ve imalat zamanı fazladır. Fakat elbette ki teknolojinin ilerleyişi ile birlikte maliyet ve imal sürecine ilişkin bu olumsuz yönlerin azalacağı aşikârdır.

İnşaat sektöründe kullanılan Kompozit malzemelere ilişkin bir örnek verecek olursak eğer bunların ilkini güçlendirilmiş beton oluşturur. Bilindiği gibi **beton**; çimento, doğal veya yapay ince, kalın agrega, su, kimyasal / mineral katkılardan oluşan, başlangıçta plastik daha sonra katılaşma süreci geçirip sertleşen birleşim olarak tariflenmektedir. [2]

Betonun dayanımı ve mukavemetini etkileyen en büyük etken su olup suyun düşürülmesiyle mukavemet ve dayanımın artması sağlanırken işlenebilirliği düştüğü bilinmektedir. Bu durumda daha yüksek bir mukavemet, hafiflik takviye ile sağlanır. Ve kullanım alanına göre özel takviye malzemesi kullanılır. Örneğin çelik tel donatılı beton Çelik tellerin yüzey ve kenarlar dâhil, betonun her doğrultusunda kontrollü ve güvenli bir şekilde dağılması ve böylece karmaşık yüklemelere karşı koyar, çatlama riskini azaltır. Kullanılan çelik düşük karbonlu özel bir çelik tel olup dayanım bakımından hasır yapımında kullanılan St IV- b çelikten iki kat daha üstündür. (1100 N/mm^2). Beton içinde hızla homojen olarak dağılır. (şekil 1.12)

---

[2] Özışık, G., 1996, Beton

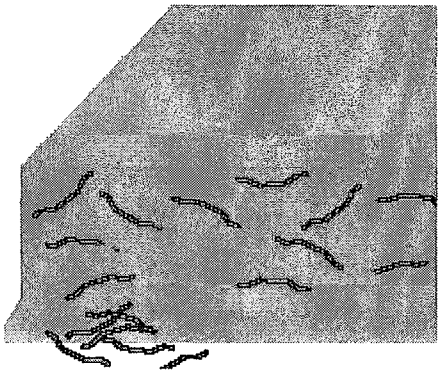

Şekil 1.12 Çelik tel donatılı beton

Çelik tellerin betonda kullanımı şu faydaları sağlar;

- Yüksek taşıma kapasitesine sahip sünek beton
- Etkin çatlak kontrolü
- Dayanıklılık
- Donatı işçiliğinde azalma
- Donatını korozyonun oluşmaması

Şekil 1.13' de çelik tel donatılı betonun tekrarlı yükleme halindeki yük- sehim ilişkisi görülmektedir;

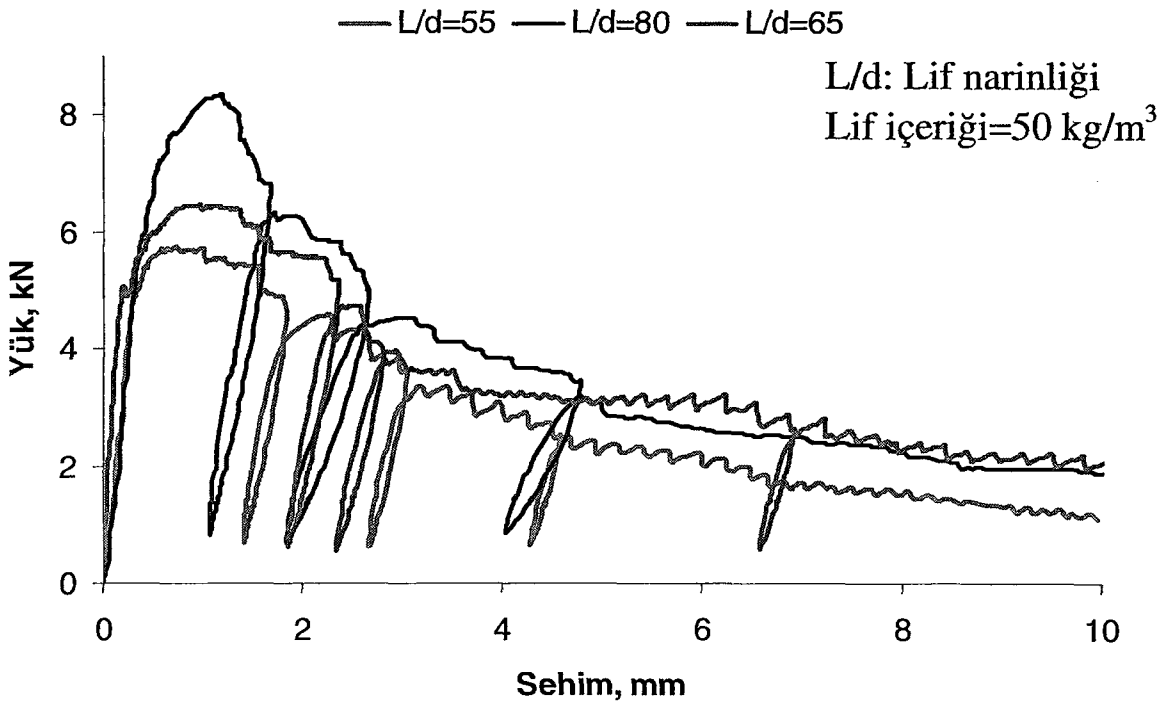

Şekil 1.13 Çelik tel donatılı betonun tekrarlı yükleme halindeki yük- sehim ilişkisi

Kompozit malzeme üretiminde temel amaç malzemelerin üstün yanlarından faydalanmaktır. Böylece yüksek mukavemet ve rijitlik elde edilmiş olur. Buradan yola çıkarak tabi ve suni malzemelerin bir arada kullanılması suretiyle Kompozit sistemler elde edilir. (Çizelge 1.7)

Beton ve Ahşap	Ahşap ve Beton
Beton ve Çelik	Çelik ve Beton
Ahşap ve Taş	Taş ve Ahşap
Plastik ve Beton	

Çizelge 1.7 Kompozit sistemler

2. YÜKSEK YAPILAR:

2.1 Yüksek Yapıların Tarihi ve Gelişme Sebepleri:

Mısırdaki firavunların ölmezliğini simgelemek dünya var oldukça uzun müddet ayakta kalan bir yapıyı oluşturması bakımından firavunların genel arzusu üzerine yıkılmayan bir yapı örneği olarak piramitler yapılmıştır. Piramitler aslında yıkılmış bir yapıdır. Bundan dolayı depremde yıkılmış bir yapı tekrar yıkılamayacağından göre ölümsüzleşmişlerdir. İşte yüksek yapı fikri ilk defa bu nedenden dolayı yapılmaya başlanmıştır. Yüksek yapı olarak piramit yapmak, tabanda kare, tepede sıfır olma esasına dayandığından ne kadar geniş taban olursa o kadar yüksek piramit tepesine ulaşılıyor.(resim 2.1)

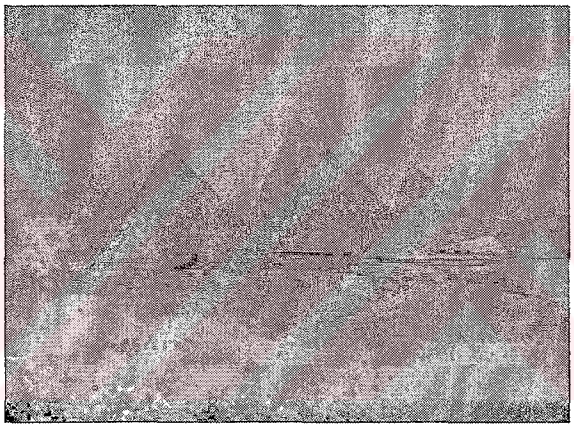

Resim 2.1 Mısır piramitleri

Buna göre Mısırlılar, Kralları Keops'u ölümü üzerine inançları gereği hazinesiyle birlikte gömmek amacıyla 146m yüksekliğinde inşa ettikleri taştan piramit (MÖ 2600) tarihin en eski yapılarından biri olup yüksek yapıların ilki olarak kabul edilir. Daha sonraları yüksek yapı olarak Yemen'de Haroz dağında kesme taştan mesken olarak yapılmış kule evler, MÖ 600 yılında Babilde yapılan 90m yüksekliğindeki mabet amaçlı ünlü Babil kulesi ve MÖ 282 yılında inşa edilip 1200 yıl boyunca dünyanın en yüksek yapısı olma özelliğine sahip olan İskenderiye Feneri görülmektedir. Uzak doğuda ise Atalarından kalan kültür nedeniyle Japonya, Çin ve Himaleyalar da kule yapımında ahşap ve tuğla kullanılıyordu. Roma imparatorluğunun ikiye bölünüşü ile beraber yüksek yapılarda bir duraksama görüldü. Ancak 19.yüzyılda, yeni birer inşaat malzemesi olan dövme ve dökme demir ile çeliğin bulunmasıyla köprü ve yüksek yapılar giderek gelişmiştir. Bu döneme ait örnek

olarak da Alexandre Gustave Eiffel in 1891de yaptığı Eiffel kulesini verebiliriz.(resim 2.2) Bu örnekler gösteriyor ki tarihsel süreç içerisinde yüksek yapılar ilk olarak anıtsal amaçlarla yapılmış daha sonra teknolojinin ve bazı etmenleriyle etkisiyle yüksek yapı yapımına yönelim olmuştur. Bu etkenler şunlardır;

- Şehirlerdeki nüfus yoğunluğunun artması nedeniyle kent alanlarının daha ekonomik şekilde kullanma gereği
- 1. ve 2. dünya savaşları sonrasında toplu konut düşüncelerinin ortaya çıkışı
- Yapı malzemesi ve yapım teknolojisindeki gelişmeler
- Yüksek arsa fiyatları, yapı alanlarının azalması ve nüfus artışı

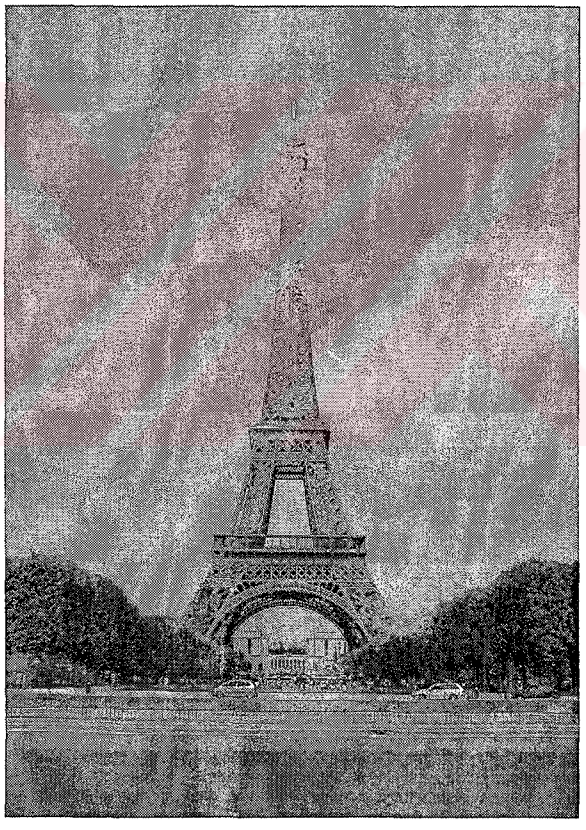

Resim 2.2 Eiffel kulesi

İnsanoğlunun yeryüzünde barınacağı, bina yapacağı toprak parçası çok kısıtlıdır. Yerküremizin üçte ikisi su ile kaplı olduğu düşünülecek olursa ormanlar ve maden yatakları bu üçte birin içinde olacağı düşünülerek insanların barınacağı ve kullanacağı alanlar çok kısıtlı olmaktadır. Bu kullanılabilir alanlar, yollar, sportif alanlar ve diğer genel kullanım alanları da bu alandan çıkarılacak olursa dünyadaki mevcut kullanılabilir alanı

artırmanın tek yolu katlı binalar yapmaktır. Dolayısıyla teknolojinin gelişmesi insanoğlunun aynı bölgede yerleşme arzusu o yerlere çok katlı binaların yapılmasını kaçınılmaz kılmıştır. Yunanlı bir bilim adamı yaptığı hesaplara göre dünya ancak 16 milyar insanı barındıracak araziye sahiptir. Ancak yüksek yapılar yapılarak insanların binalara yerleştirilmeleri mümkündür.

2.2 Yüksek Yapıların Tanımı ve Sınıflandırılması:

Yüksek yapı, genel olarak yakın ve uzak çevresini, fiziksel çevre, kent dokusu ve her türlü kentsel alt yapı yönünden etkileyen yapı (bina) türüdür. Binanın herhangi bir cephesinden, görünen bina yüksekliği (30.50) metreyi geçen, görünen veya görünmeyen bodrum katları dâhil olmak üzere toplam kat adedi (13) ü geçen yapılar, yüksek yapı olarak kabul edilir."[3]

Yapıları sınıflandıracak olursak; [4]

- Birinci kategori: yüksek olmayan 8–12 kat arası binalardır.
- İkinci kategori: 12–25 kat arası binalardır.
- Üçüncü kategori: 25–55 kat arası binalar oluşturur.
- Dördüncü kategori: 55–75 kat arası binalardır.
- Süper gökdelenler: 75 kat üstündeki binalardır.

Bunlardan 25 kattan sonrakiler yüksek yapı sınıfına girmektedir. Çizelge 2.1' de dünyanın en yüksek yapıları görülmektedir.

[3] Yüksek yapılar yönetmeliği
[4] İstanbul'un geleceği ve gökdelenler paneli

	Yapı Adı	Bulunduğu Şehir	Yükseklik (m)	Kat Adedi	Yapıldığı Yıl
1.	Taipei 101	Taipei	509 m	101	2004
2.	Petronas Tower 1	Kuala Lumpur	452 m	88	1998
3.	Petronas Tower 2	Kuala Lumpur	452 m	88	1998
4.	Sears Tower	Chicago	442 m	108	1974
5.	Jin Mao Tower	Shanghai	421 m	88	1998
6.	Two International Finance..	Hong Kong	415 m	88	2003
7.	CITIC Plaza	Guangzhou	391 m	80	1997
8.	Shun Hing Square	Shenzhen	384 m	69	1996
9.	Empire State Building	New York City	381 m	102	1931
10.	Central Plaza	Hong Kong	374 m	78	1992

Çizelge 2.1 Dünyanın en yüksek 10 yapısı

Resim 2.3 Taipei 101

2.3 Yüksek Yapı Tasarımında Teknolojik Etkenler:

Yüksek yapıların Planlama sürecinde ilk etkenini ekonomi oluşturur. Yapım maliyeti ve yapı tamamlandıktan sonraki işletme giderleri bu ekonomik etkeni oluşturur. Etkenlerden bir diğeri olarak da Zeminden bahsedebiliriz. Çünkü Sistem tüm yükleri zemine aktaracağı için zemin tüm yükleri taşımak zorundadır ve bu nedenle yapının ve taşıyıcı sistemin malzemesine zemin koşulları doğrudan etkir. Taşıyıcı sistem rijitliği yapının geometrik formuna, kat sayısına, sistem türüne narinliğe bağlı olması, Fabrikasyon ve yapım, yangından korunma ve yapının maliyetinin 1/3 ünü oluşturan sıhhi donanımda diğer etkenler olup dikkate alınmalıdır. Bölgesel yönetmelikler örneğin kat sınırları, malzeme fiyatları ve olanakları da değerlendirilmelidir. Bunlardan yola çıkarak Yüksek yapıların planlanmasında göz önünde bulundurulması gereken etmenleri maddeler halinde sıralayacak olursak;

- Ekonomik etkenler,
- Zemin koşulları,
- Yapının geometrik formu ve yükseklik/genişlik yani narinlik değeri,
- Fabrikasyon ve.yapım,
- Mekanik donanım sistemleri,
- Yangından korunma,
- Yerel koşullar,
- Yerel malzeme fiyatları ve olanaklar.

2.4 Yüksek Yapılarda Taşıyıcı Sistemler:

Yapının güvenlik ve stabilitesinin yanı sıra malzeme tasarrufu sağlaması yönünden yüksek yapılarda taşıyıcı sistem tasarımın ilk aşamasından itibaren düşünülmelidir. Unutmamak gerekir ki yapının iskeletini taşıyıcı sistem oluşturur. Taşıyıcı sistemler çeşitli kriterlere göre sınıflandırılırlar. Bu kriterler şunlardır;

- Malzeme; betonarme, çelik ve kompozit
- Yer çekim kuvvetlerine dayanıklılık; döşeme iskeleti, kolonlar, kafesler ve temeller

- Yatay yüklere dayanıklılık; perde duvarlar, çerçeveler, kafesler, diyaframlar
- Yatay yükün büyüklüğü ve tipi; rüzgâr, sismik
- Mukavemet ve servis gereksinimleri; hız, ötelenme, düktilite

Çok katlı yapı üzerine gelen yükler iki ana grupta toplanırlar;

1- Düşey yükler,
2- Yatay yükler.

Buna göre çok katlı bir yapının elemanları, düşey ve yatay yükleri taşıyan elemanlar olarak iki ana grupta toplanırlar. Ancak bu elemanlar birbirinden ayrıdır denilemez zira birbiriyle sıkı sıkıya bağlıdırlar.

Yapıda düşey taşıyıcı elemanları, yatay düzlemdeki yükleri toplayarak zemine ve temele aktarırlar. Her katın düşey taşıyıcıları, daha üst katlardan gelen yüklerin toplamını taşımaktadır. Bu sebepten alt katlara inildikçe, düşey taşıyıcıların kesitleri artmaktadır. Bu da yüksek yapılarda alt katlardaki döşeme alanlarını kısıtlamaktadır. Birde yatay yükler eklenince sorun daha da büyümektedir. Bu nedenle uygun bir taşıyıcı sistem tipi seçimi gerekmektedir.

Çok katlı yapılarda, rüzgâr ve deprem yüklerinden oluşan yatay yükler, düşey yük kadar önemlidir. Yatay yüklere maruz çok katlı bir yapı zeminden ankastre bir konsol gibi olup eğilme, kayma, dönme ve düşey yüklerin oluşturduğu basınç etkisindedir. Buna göre yatay yükleri taşıyan taşıyıcı sistemleri şu şekilde sınıflandırabiliriz;

1- Çerçeve Sistemler
2- Perde (kesme) Duvarlı Sistemler
3- Çerçeve ve Perde Duvarlı Sistemler
4- Çekirdekli Sistemler
5- Tübüler Sistemler
6- Hibrid Sistemler

Birbirine rijit bağlantılarla bağlanmış düşey kolon ve yatay kirişlerden oluşmuş sistemlere **Çerçeve sistemler** denir. Çerçeveler iki alt bölüme ayrılırlar;

- Düzlemsel çerçeveler
- Uzaysal çerçeveler

Düzlemsel çerçeveler aynı düşey düzlem içindeki kolon ve kirişlerden oluşan sistemlerdir. Ve bunlar düşey ve yatay yükleri birlikte taşırlar. Çerçevelerin taşıma gücü, çerçeveyi oluşturan kiriş ve kolonların mukavemetine bağlıdır.

Uzaysal çerçeveler ise çok sayıdaki düzlemsel çerçeveden oluşan sistemlerdir. Ve çok katlı yapılarda kullanım alanı oldukça geniş bir yapıdır. Ve yine yatay yüklere karşı tüm sistem birlikte cevap verir.

Çerçeveler tek başlarına, ancak kat adedi 8–10 civarında olduğu vakit ekonomiktir. Yapı yükseldikçe ekonomikliğini yitirir. Zira yapı yükseldikçe kolon ve kiriş boyutu hızla artar. Bundan dolayı yüksek yapılarda taşıyıcı elemanlarla pekiştirilerek kullanılır. Bu pekiştirilmiş çerçevelere **Moment dayanımlı çerçeveler** ve **Çaprazlı çerçeveler** denir.

Yapıya sismik ve rüzgâr kuvvetlerine karşı, çerçeve sistemlere göre daha fazla bir rijitlik sağlayan, düşey bir konsol gibi davranan düşey düzlemsel diyaframlara **Perde duvarlar** denir. Mekânlar arasında mükemmel bir ses ve yangın izolasyonu sağlamaktadır. Perde duvarlar bina içinde ve cephelerinde düzlem elemanlar ve çekirdekler, bina cephelerinde ise binayı saran cephe duvarları şeklinde kullanılmaktadır. Perdeler plan doğrultularına göre de şu şekilde ayrılmaktadırlar;

- Enine doğrultuda duvarlı sistem
- Boyuna doğrultuda duvarlı sistem
- İki doğrultuda duvarlı sistem

Otuz kattan sonra yüksek yapılarda çerçeve sistemi yatay yüke karşı tek başına uygun olmaması ve kat sayısı arttıkça alt kolon kesitlerinin boyutunun da artması sebebiyle yapı içinde yatay yükleri karşılayacak perde duvarlar düzenlenir. Oluşan bu sisteme **Çerçeve ve Perde Duvarlı Sistemler** denir. Perde duvarlar asansör veya merdiven etrafında kapalı bir çekirdek oluşturulabilir.

Perdelerin birleşmesiyle oluşan düşey taşıyıcı sistemlere **Çekirdek** denilmektedir. Bu sistemler iki doğrultuda rijitleştirilmiş perde davranışı gösterirler. Perde duvarlar apartmanlar ve ticaret yapılar için kullanım alanı nedeniyle idealliklerini yitirirler. Bu durumda perdelerin birleşmesiyle oluşmuş çekirdek sistem kullanımına yönelim olmuştur. Çekirdek iç ya da dışta, açık veya kapalı, tek ya da çoğaltılmış, simetrik veya asimetrik, bina geometrisiyle aynı ya da farklı olarak yapılabilmektedir.

Birbirine yakın dış kolonların kat kirişleri ile birleşmesiyle oluşturulan çerçevelerden meydana gelen taşıyıcı sisteme **Tübüler Sistem** denir. Tübüler sistemde yatay yüklerin çoğunu ya da tümünü dış cephe duvarları karşıladığından perdelere gerek kalmamaktadır. Çerçeveli tüp, tüp içinde tüp gibi çeşitleri vardır.

Yüksek yapılar geleneksel sistemi, sırasıyla moment dayanımlı çerçeve, perde duvarlı ve çerçeveli tüp şeklinde gelişme göstermiş olan yatay yüke dayanıklı sistemler tarafından taşınmak üzere tasarlanmıştır. Teknolojik gelişmelerle karma sistemlerle çok çeşitli malzemelerin kullanımından kaynaklanan diğer etkileri de göz önüne alma şansı doğmuştur. Böylece modern eğilimlerinde yolu açılabilmiştir. Böylece bir dizi farklı elemanlardan oluşan **Hibrid Sistemler** oluşmuştur. Şekil 2.1 de en çok kullanılan taşıyıcı sistemler görülmektedir.

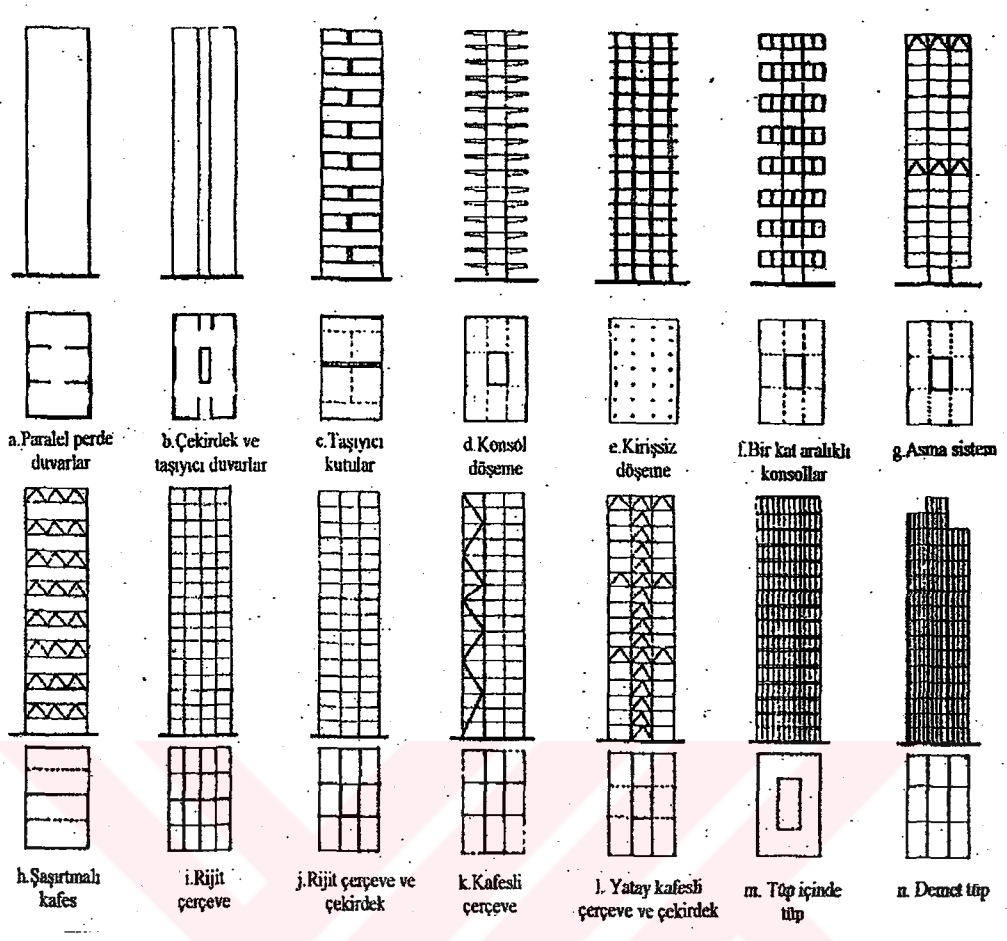

Şekil 2.1 En çok tercih edilen taşıyıcı sistemler

2.4.1 Çelik Taşıyıcı Sistemler:

Mekanik olarak işlenebilen yani, dövülerek, preslenerek, haddeden geçirilerek şekil alabilen demir alaşımlara "Çelik" denir.[5] Çelik malzeme bünyesinde %0,16–20 kadar Karbon bulundurur. Karbon miktarı arttıkça çeliğin mukavemeti ve sertliği artar. Bunlara ek olarak fosfor, kükürt, azot, silisyum, manganez, bakır gibi elemanlarda vardır. Çelik malzeme bünyesine krom, nikel, vanadyum, molibden gibi maddeler katılarak yüksek kaliteli çelikler üretilebilmektedir. Yüksek fırınlarda kok kömürü yakılarak demir cevherinin ergitilmesi sonucu içinde % 5 karbon bulunan ham demir elde edilir. Ham demir özel fırınlarda katkılanmasıyla, bünyesinde % 4 karbon bulunan font (pik) elde edilir. Özel fırınlarda ham demir artırılıp, katkılanmasıyla çelik malzeme elde olur.

[5] Odabaş, Y., Ahşap ve Çelik Yapı Elemanları

Bugün için yapılarda kullanılan çelik malzemenin kristal bir bünyesi vardır. İzotop ve homojendir. Şekil 2.1 de çelik malzemenin gerilme deformasyonu görülmektedir.

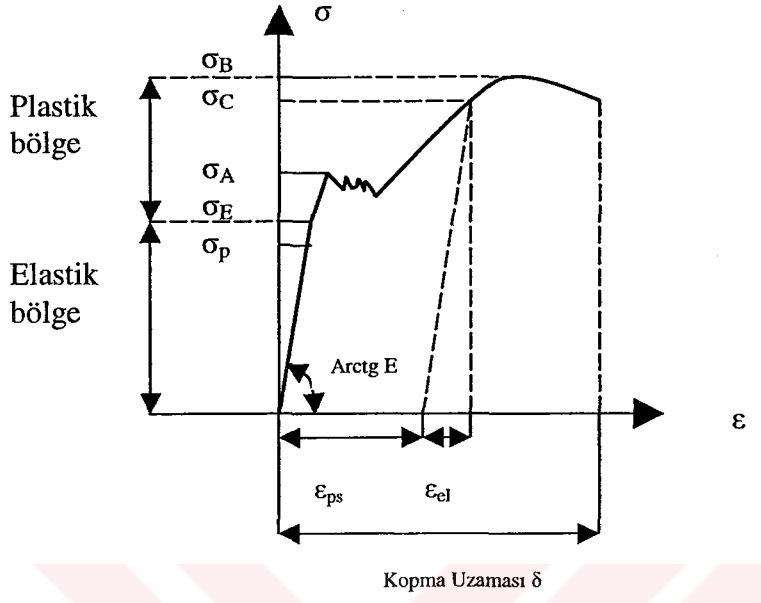

Şekil 2.2 Çeliğin gerilme şekil değiştirme grafiği

Yapılarda en çok kullanılan çelik malzeme St 37 dir. 37 kopma mukavemetini kg/mm^2 cinsinden değeridir. Birleşim aracı olarak perçin, bulon veya kaynak kullanılır. Perçin için St 34 – 44 bulon içinde (4,6-5,6) çelikleri tercih edilir. Çelik malzemeye ilişkin çizelge 2.2 de karakteristik değerleri verilmiştir ve bu değerler tüm çelik türleri için geçerlidir.

Elastisite modülü (E)	2 100 000 kg/cm^2
Poisson sayısı (γ)	0,3
Kayma modülü (G)	810 000 kg/cm^2
Lineer ısı katsayısı (α_t)	12.10^{-6}

Çizelge 2.2 Çelik malzeme karakteristik değerleri

Yapılarda Çelik malzeme kullanmanın üstün ve sakıncalı yanları vardır.

Üstün niteliklerini sayacak olursak;

- Homojen ve izotroptur
- Üstün mukavemetlidir bu yüzden malzeme gideri azalır
- Çekmeye dayanımı yüksektir

- Elastisitesi büyüktür
- İnşaat süresince hava koşullarından etkilenmez
- Çelik bir yapıyı az bir zayiatla söküp başka bir yerde kurma olanağı vardır
- Çelik yapılarda değişiklik veya takviye yapılması gayet kolaydır
- Uygun bir planlamayla çelik yapının iskele kurmadan gerçekleştirilebilme olanağı vardır.

Bütün bunlara karşın çelik malzemedeki sakıncalı yanlar ise şunlardır;

- Yanıcı değildir ama ısı yükselmesiyle mukavemeti ve elastisitesi hızla düşer
- Su ve kimyasal etkiyle paslanır
- Ses ve ısı açısından iletkendir önemli bir yalıtım gerekir.

2.4.2 Betonarme Taşıyıcı Sistemler:

Beton gibi çekme dayanımı düşük bir malzemeden taşıyıcı sistemler oluşturmak, zor ve ekonomik çözüm gerektirir. Beton içine dayanımı yüksek başka bir malzeme ile çekme gerilmelerini karşılamak en uygun çözümdür. Çelik harici cam elyaflı çubuklar önerilse de çelik kadar ekonomik sonuçlar vermemektedir. Buna göre çelik ve betondan oluşan Kompozit yapı malzemesine betonarme denir. Ve burada beton basıncı karşılarken çelik çekmeyi karşılar. Ancak Kompozit olabilmeleri için birlikte çalışmaları ve kenetlenmiş olmaları gerekmektedir. Bu kenetlenme deformasyonlarının aynı olması anlamına gelip aderans olarak isimlendirilir.(şekil 2.3)

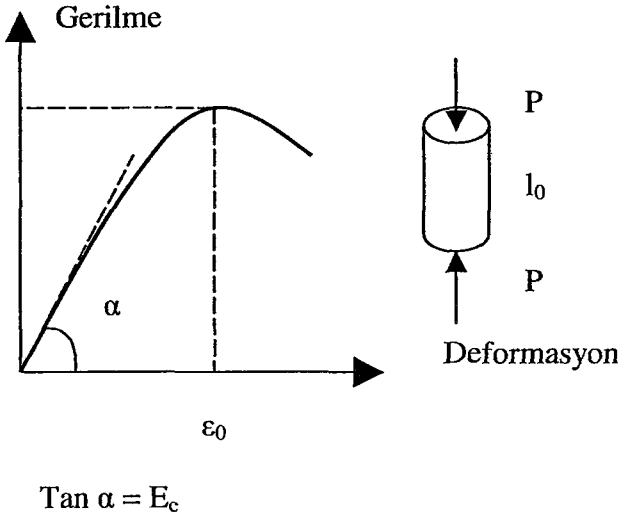

Şekil 2.3 Beton gerilme deformasyon eğrisi

Betonarmede donatı çubuklarının en verimli kullanımı, asal çekme yönünde yerleştirilmesi ile sağlanır. Beton asal çekme gerilmelerine maruz olduğu anda illaki çatlayacaktır ama çelik donatı sayesinde bu çatlamalar kılcallık seviyesinde kalır. Donatı ile asal çekmeler arasındaki açı arttıkça donatı etkinliği azalır ve 90^0 olduğu anda donatı artık etkisiz hale gelir.

Betonarme uygulamalarının Ahşap ve Çelik yapılara nazaran üstün yanları vardır. Bu üstün yanlar şunlardır;

- Betonarmenin basınç dayanımı yüksektir.
- Betonarme yapılar yangın tehlikesine karşı daha büyük dayanımlıdırlar.
- Çelik yapılara nazaran rijitlikleri daha fazla olup kullanım sırasında rahatsız edici yer değiştirmeler ortaya çıkarmazlar.
- Betonarme inşaatın bakımı Ahşap ve Çelik yapılara nazaran yok denilebilir.
- Kullanım süreleri diğer yapılara nazaran daha fazladır.
- Betonarme kemer ve kabuk gibi değişik şekillerde dökülebilir.
- Betonarmede kum, çakıl ve su gibi yerel malzeme kullanımı olduğu için daha ekonomiktir.
- Betonarme yekpare döküldüğü için birleşim elemanları için özel bölge oluşturma gerekmez.
- Çelik yapılara nazaran daha az kalifiye işçilik gerektirir.

Bütün bunların yanında mahsurlu yanları da vardır. Bunları da inceleyecek olursak;

- Beton çekme dayanımı düşüklüğü nedeniyle donatı kullanmak gerekir.
- Taze beton sertleşinceye kadar kalıp ve iskele kullanmak gerekir.
- Betonarmenin ağırlığı yanında dayanımının düşük olması ağır yapı elemanları ortaya çıkarır.
- Betonarme bileşimi ve hazırlanışı yanında yerleştirilmesi ve sertleşmesi sırasındaki bakımı etkindir.
- Betonarmede tekrar kullanım olanağı yoktur.
- Betonarmede donatının projeye uygunluğu oldukça mühimdir.
- Betonarmede taşıyıcı eleman güçlendirilmesi çelik yapılara nazaran daha zordur.

2.4.3 Beton-Çelik Karışımı Kompozit Sistemler:

Yüksek yapılar da ekonomik çözüm için yapı malzemesi olarak bazen çelik bazen betonarme istenen olumlu cevabı vermektedir. Elastik modülünün yüksek oluşu, büyük açıklıklarda kullanımı, inşaat süresinin kısalığı, yapının özağırlığını büyük ölçüde hafifletmesi çeliğin olumlu nitelikleridir. Ancak yüksek sıcaklıklarda elastik modülünün ve mukavemetinin hızlı düşüşü ve ayrıca su veya kimyasal maddeyle ilişkisiyle korozyona uğraması sakıncalı niteliklerini oluşturur. Ancak Kompozit elemanlarda ise malzemelerin üstün yanlarından faydalanma olanağı nedeniyle malzemelerin bir takım olumsuz niteliklerinden kurtulmuş olunur.

Kompozit elemanların kullanımı yapılarda birçok olumlu nitelik oluşmasına sebep olmaktadır. Bunların bazılarını maddeler halinde sıralayacak olursak;

- Kompozit kesitler çelik kesitlere göre daha ekonomiktir. (şekil 2.4)
- Kompozit kesitler çelik kesitlere göre rijitlik artışları sebebiyle daha küçük sehimler oluştururlar.
- Kompozit elemanlar, yeterli düktiliteye sahip oldukları için plastik davranışa dayanan taşıma gücü hesap ilkeleri kullanılabilmektedir.
- Kompozit malzemenin düktil oluşu elastik bölge aşımı sonrasında sistemdeki zorların tekrar dağıtımına izin vermektedir.
- Kompozit tasarlanan kesitler çeliğin yangın dayanımına göre büyük üstünlük sağlamaktadır.

- Kompozit kesitlerde, yükler arttığında, sistemin plastikleşmiş elemanları, sabit kesit zorları altında şekil değiştirmekte, ancak bu plastik şekil değiştirmeler sistemin henüz elastik kalan kısımları içinde bulunduklarından sınırlı kalmakta ve ek yükler bu elastik kısımlarca karşılanmaktadır. Böylece mekanizma oluşturmaya yeterli plastikleşme meydana gelinceye kadar yüklerdeki artma sürmekte ve bu sayede sistem taşıma gücüne, artık hiçbir ek yük taşıyamadığı durumda ulaşmaktadır.

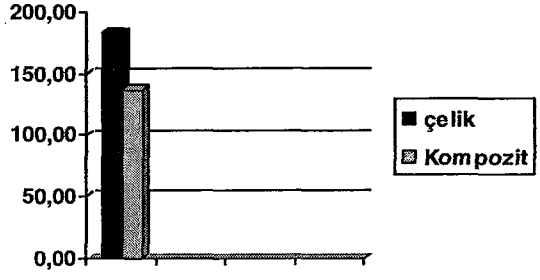

Şekil 2.4 Çelik ve Kompozit yapı üretiminin ekonomik kıyası

2.4.3.1 Kompozit Döşemeler:

Kompozit döşeme sistemleri, çelik profillerle betonarme tablanın birlikte çalıştırıldığında, T kirişler oluşturulmaya yönelik taşıyıcı sistem düzenlemesidir.(şekil 2.4) çelik gövde ve betonarme tablanın birleşimi profil üzerine kaynatılan bağlayıcılar / bulonlar ile sağlanmaktadır. Kompozit döşeme sistemleri, malzeme ekonomikliği, iş gücü azalımı, iç mekân kullanımlarında kullanışlılık, hafif bina kütleleri oluşturması bakımından olumluk sağlar. (şekil 2.5) diğer yandan Kompozit bir taşıyıcı sistemin sahip olduğu mukavemet, elemanların kendi mukavemetleri toplamından daha yüksektir.

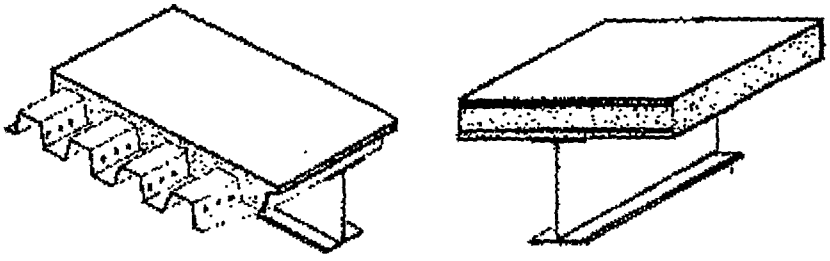

Şekil 2.5 Çelik-Betonarme Kompozit döşeme sistemi

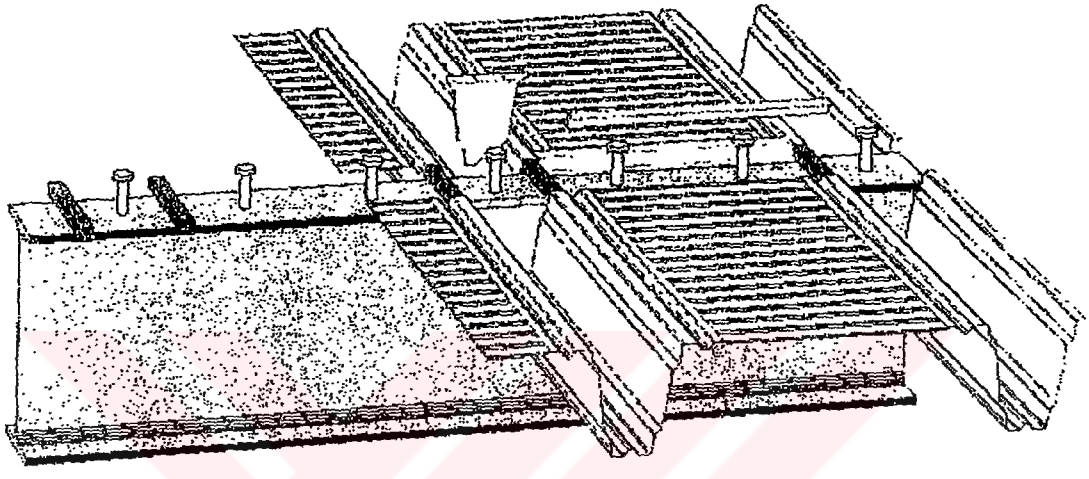

Şekil 2.6 Kompozit döşeme 3 boyutlu görünüşü

Betonarme plakla çelik tabliyenin Kompozit çalıştırılmasının sağladığı yararlar şunlardır;

- Döşemenin yatay ve düşey rijitliği artar
- Kiriş açıklık ve aralıkları büyür, kiriş sayısı, döşeme aralığı, çerçeve ve temel maliyeti ya da konstrüksiyon yüksekliği azalır,
- Yapım işlemi hızlanır ve betonun dökümü için kalıp ve yapı malzemesi için büyük depolama alanı gerekmez,
- Elektrik kablolarının yerleşmesinde esneklik sağlanır

Katlanmış çelik saçların kalıcı kalıp olarak kullanılması son yıllarda giderek artmıştır. Kalıcı kalıp aynı zamanda donatı görevini üstlenmesi durumunda ekonomikliği daha da artar. Bu Kompozit (karma) çalışmanın gerçekleşmesi için, çelik saç ile betonun bir bütün oluşturması gerekmektedir. Katlanmış çelik saç yeni dökülen betonarme plak betonu ve donatısını kendi ağırlığını, inşaat sürecindeki hareketli yükleri taşımaktadır. Beton mukavemetini kazanıp karma çalışma gerçekleştiğinde de, işletme yüklerini taşıyan plağın

donatısı görevini büyük ölçüde ve bazen de tamamen yerine getirir. Kompozit döşeme panelleri denilen bu döşeme sisteminde fabrikalarda panellerin önceden hazırlanması ve mesnet üstüne vinçlerle konulması ile olur. (şekil 2.7)

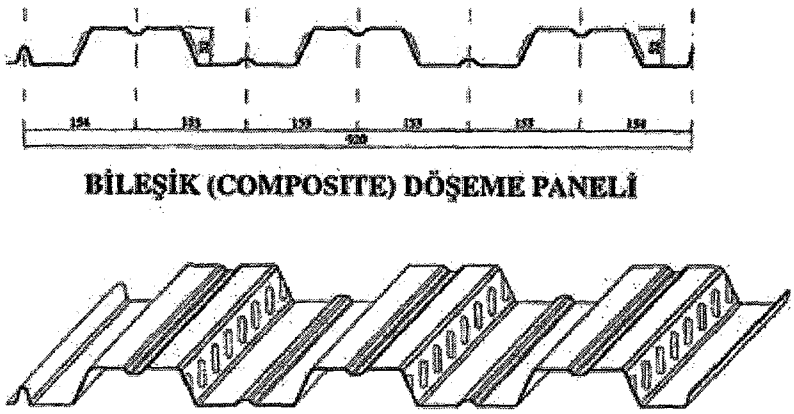

Şekil 2.7 Kompozit döşeme paneli kompozit döşeme panelleri;

- Saç katlanmasının kırlangıçkuyruğu şeklinde düzenlenmesi,
- Katlanmış saç yüzeyinde oluşturulan çıkıntı ve girintilerle,
- Katlanmış saça kaynaklanmış hafif bir çelik donatı hasırı ile
- Uç ankrajları ile kesme etkisi aktarılabilir.

Katlanmış çelik saçların kullanımı ile çelik kalıp kullanımı ortadan kalkmasını, kiriş döşeme panelleri üretimin geliştiği ve kalite kontrol metotlarının kullanıldığı standart özelliklere sahip üretim yapmak amaçlı kurulu fabrikalarda üretimi ekonomik bir alternatif sunmasını sağlar. (şekil 2.8)

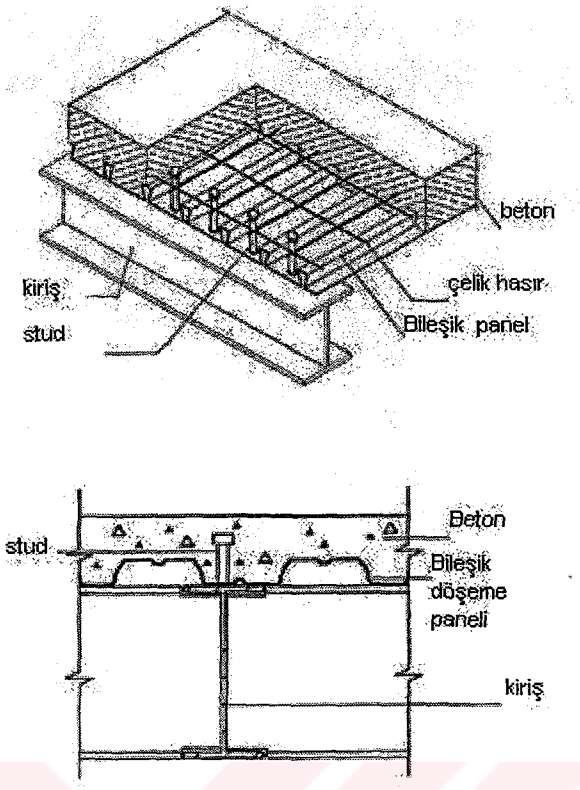

Şekil 2.8 Kompozit döşeme sistemi

2.4.3.2 Kompozit Kirişler:

Kompozit kirişler, betonarme veya Kompozit döşeme plağının çelik profiller ile birlikte çalışmasıyla yük taşıyan yatay yapı elemanlarıdır. Kompozit kirişler, Çelik profillerin yüksek eğilme rijitliği ile betonun basınç mukavemeti ile büyük taşıma kapasitesine sahiptirler. Şekil 2.9 da Kompozit bir kirişin gerilme dağılımı görülmektedir.

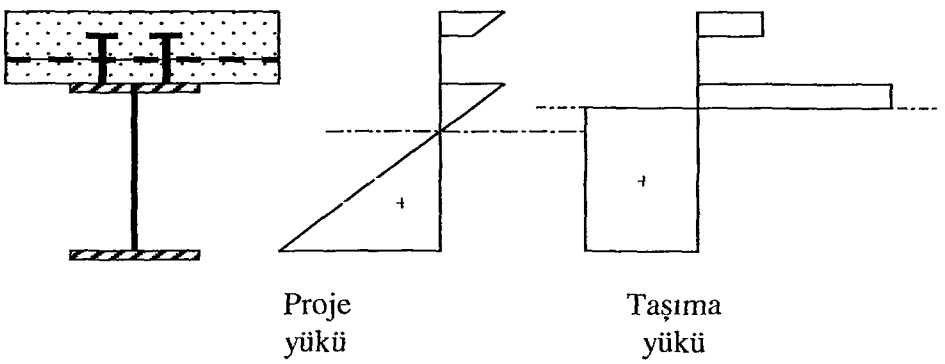

Şekil 2.9 Kompozit kirişlerde gerilme dağılımı

Çelik ve betonarme Kompozit kirişler, çelik elemanların bütünüyle beton içinde sandıklanmasıyla veya çelik kirişlerin üst başlığına betonarme döşemelerin oturtulması suretiyle oluşturulur. Şekil 2.10 da sırasıyla beton kaplı, betonarme tabliyeli, prekast başlıklı üstten beton kaplı, paralel kirişli metal levha üzeri betonarme tabliyeli, dik kirişli metal levha üzeri betonarme tabliyeli Kompozit kiriş sistemleri görülmektedir.

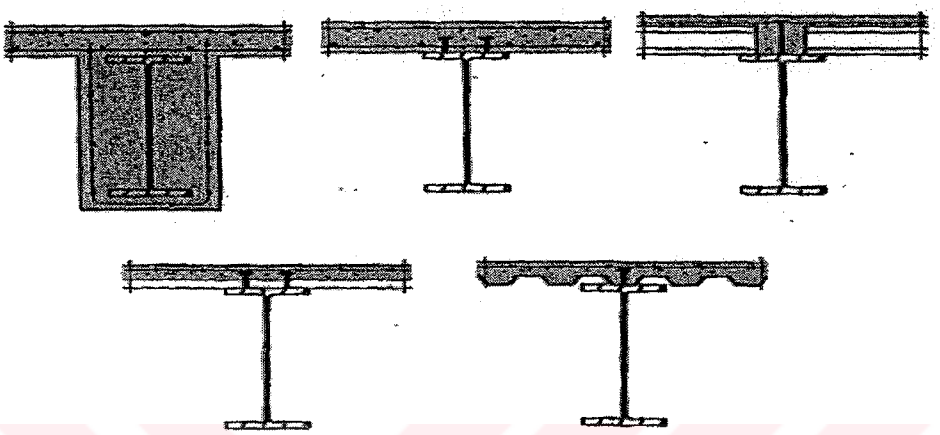

Şekil 2.10 Kompozit kiriş sistemleri

Kompozit olarak çalışmayan bir döşeme ve kiriş sisteminde döşeme ile üst başlık arasında serbest kayma mevcuttur. Ancak Kompozit çalışan döşeme kiriş sistemlerinde kayma olmayacağı kabul edilir. Ve bu da tek tarafsız eksen olmasına ve döşemenin basınç başlığı gibi çalışmasına sebep olur. Bu da pek tabi Kompozit olmayan sisteme nazaran mukavemetinin fazla olmasını sağlar. (şekil 2.11)

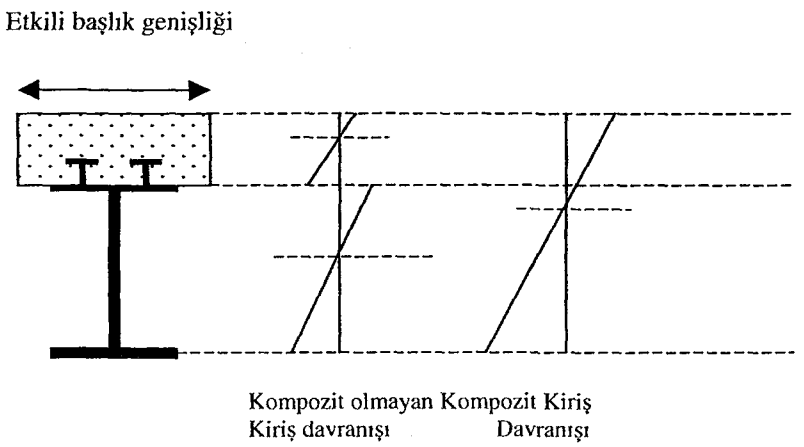

Şekil 2.11 Kiriş davranışları

Döşeme ve kirişin Kompozit çalışması için çeşitli önlemler gereklidir;

A. Beton ve çelik bölümler arasında oluşacak kaymanın önüne geçmek
B. Şekilde değiştirmeler sonunda betonarme plağın çelik gövdeden ayrılmasını mani olmak

Bu önlemlerde kayma bağlantıları tarafından sağlanır. Diğer yandan Kompozit kirişin tam başarısı için uzun dönemde dönme ve döşeme titreşimleri gibi konularında dikkate alınmalıdır. Bu da yapı kullanıcılarının en aza düşürülmüş döşeme titreşimlerini algılama derecelerinin göz önünde bulundurmasıyla olur.

Kompozit kirişlerin çeşitleri şunlardır; (şekil 2.12)

- Kompozit döşemeli Kompozit kirişler
- Kompozit kafes kirişli ve tali kirişli sistemler
- Kompozit T tabliyeliler

Kompozit döşemeli Kompozit kirişlerde kiriş üst başlığının çelik tabliye ve kirişle Kompozit davranmasını sağlayacak şekilde cıvataları kaynaklanır.

Kompozit kafes kirişli ve tali kirişli sistemlerde hazır yapım döşeme makasları, betonarme bir döşeme plağı ile bağlandıklarında Kompozit bir eleman oluştururlar. Açık gövdelilik tesisat, havalandırma, mekanik gibi çalışmalara olanak sağlar ve büyük açıklıklarda malzeme etkinliği oluşturur. Bu tür Kompozit tasarım Kompozit olmayan açık gövdelilere nazaran oldukça avantajlıdır. Çünkü Kompozit makas sistemi, azaltılmış yüksekliği ile malzemeden yüksek etkinlik, yüksek dayanım ve esneklik getirir.

T profil gövdesi üzerine betonarme plak donatısının kaynaklanması ile Kompozit çalışma gerçekleşir. Ve profiller beton kaplama suretiyle yangından korunumları sağlanır.

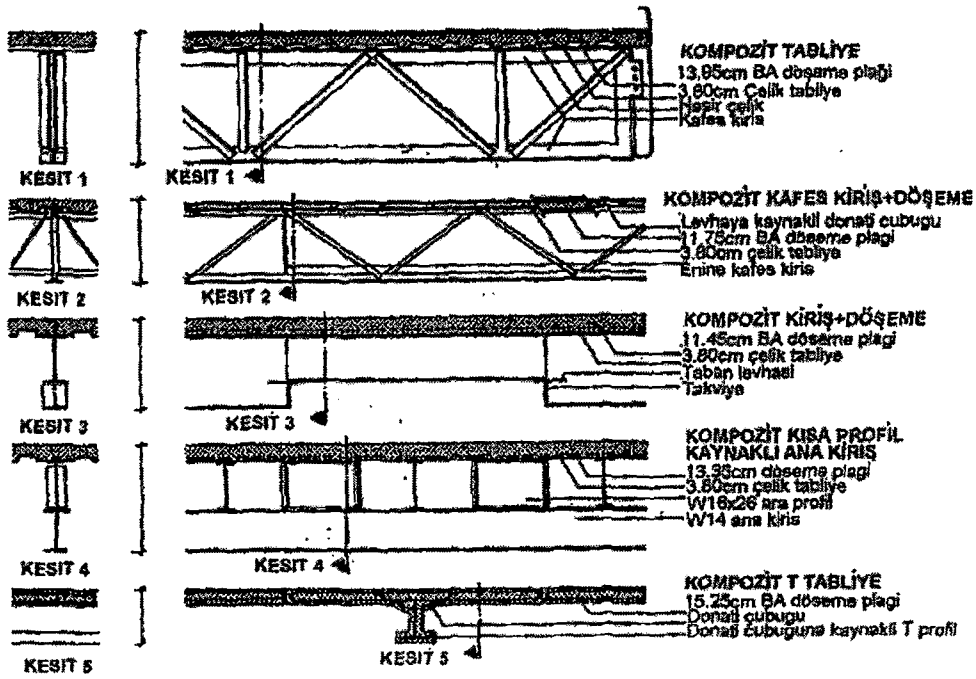

Şekil 2.12 Kompozit döşeme ve kiriş sistemleri

2.4.3.3 Kompozit Kolonlar:

Kompozit kolonlar, yüksek süneklikleri sebebiyle deprem bölgeleri için ideal olmakla birlikte betona gömülmüş çelik, içleri betonla doldurulmuş boru ve en kesitli kolon (dolma Kompozit kolon) olarak 2 türdür. (şekil 2.13, şekil 2.14)

Kompozit kolonlardan betona gömülü çelik şeklindeki çeşidi daha çok tercih edilir. Bu tür bir kolon tercih edilme sebepleri şunlardır;

- Yangın muhafazası
- Kolonların eksenel yük kapasitesinin artması
- Mimari açıdan kolonların estetikselliği

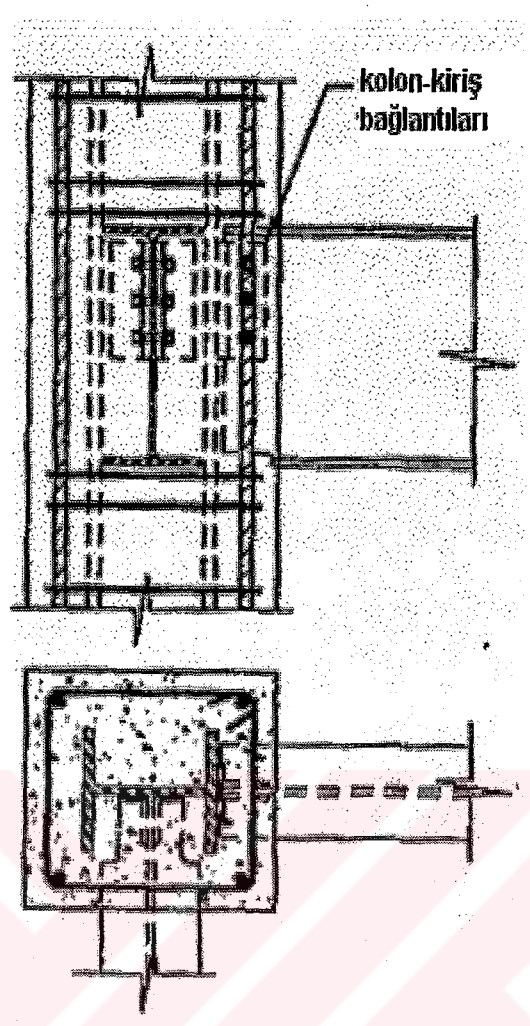

Şekil 2.13 Betona gömülü çelik Kompozit kolonlar

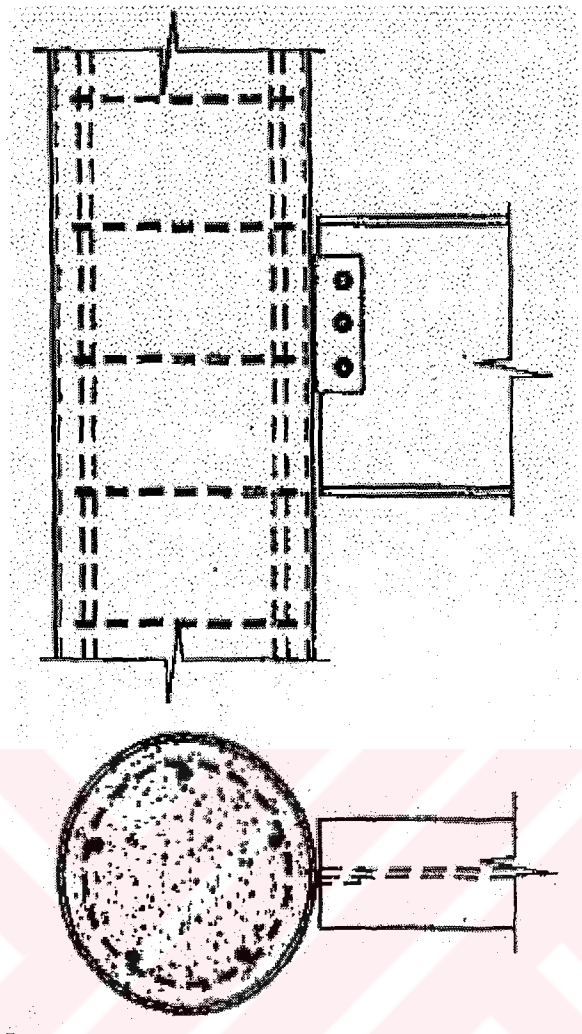

Şekil 2.14 Dolma Kompozit kolon

Şekil 2.15 de beton içine gömülmüş çelik Kompozit kolonların çelik kirişlerle, dolma Kompozit kolonun çelik kiriş ile bağlantısı görülmektedir.

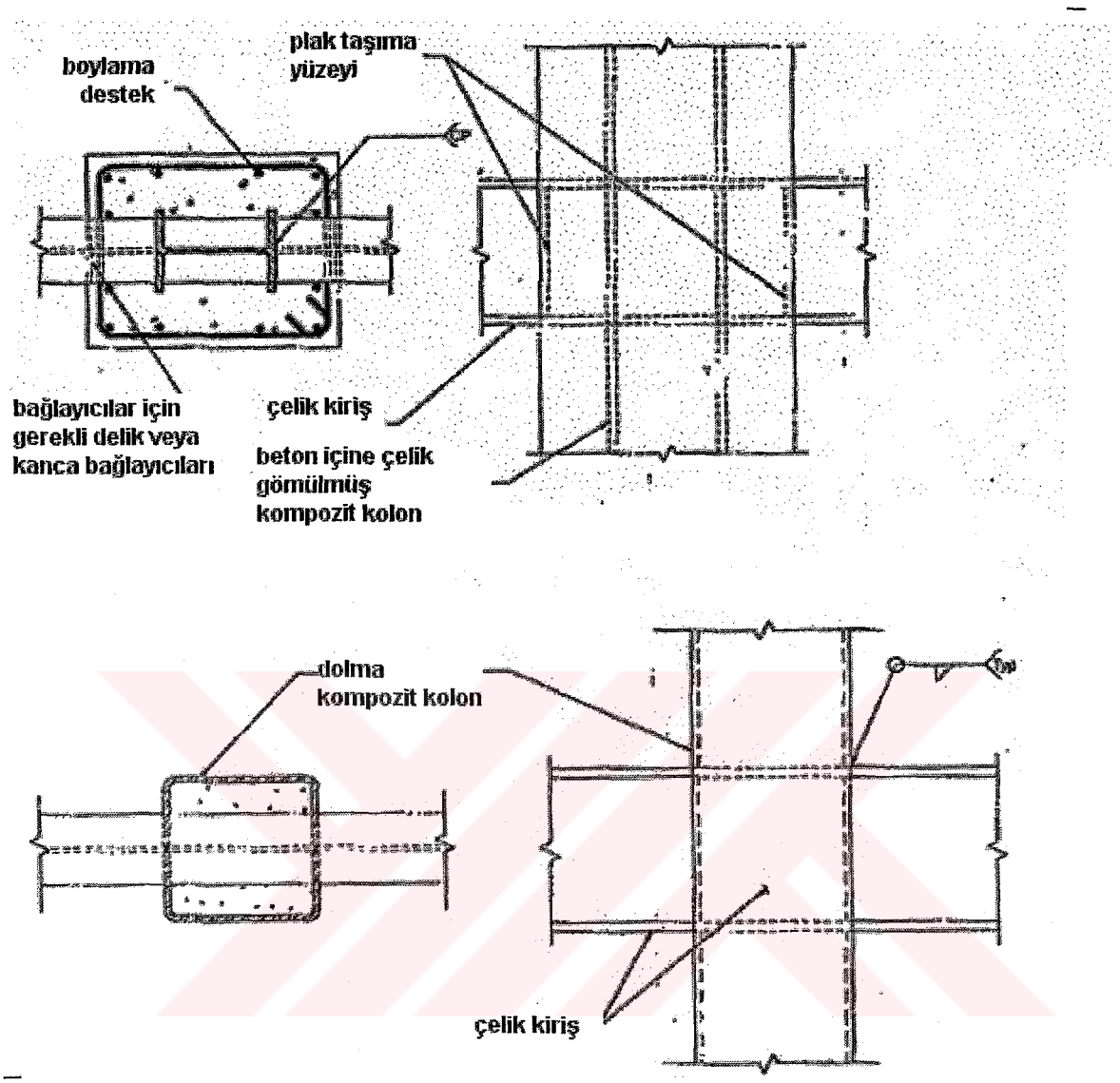

Şekil 2.15 Kompozit kolonların çelik kirişlerle bağlantıları

Çeliğin betonla kaplı olduğu kompozit kirişlerde elastik rijitliği büyük ölçüde beton kısım yönetir. Çeliğin betonla doldurulduğu kompozit kolonlarda ise elastik rijitliğin yöneticiliğini çelik kısım üstlenir.

Şekil 2.16 da dolma Kompozit kolonlar ile beton içine gömülü çelikten oluşan Kompozit kolonların mesnetsiz uzunluklarına göre kıyası görülmektedir. Burada ϕ azaltma katsayısı olup P_n ise kırılma anındaki elemanın taşıyacağı yük miktarıdır.

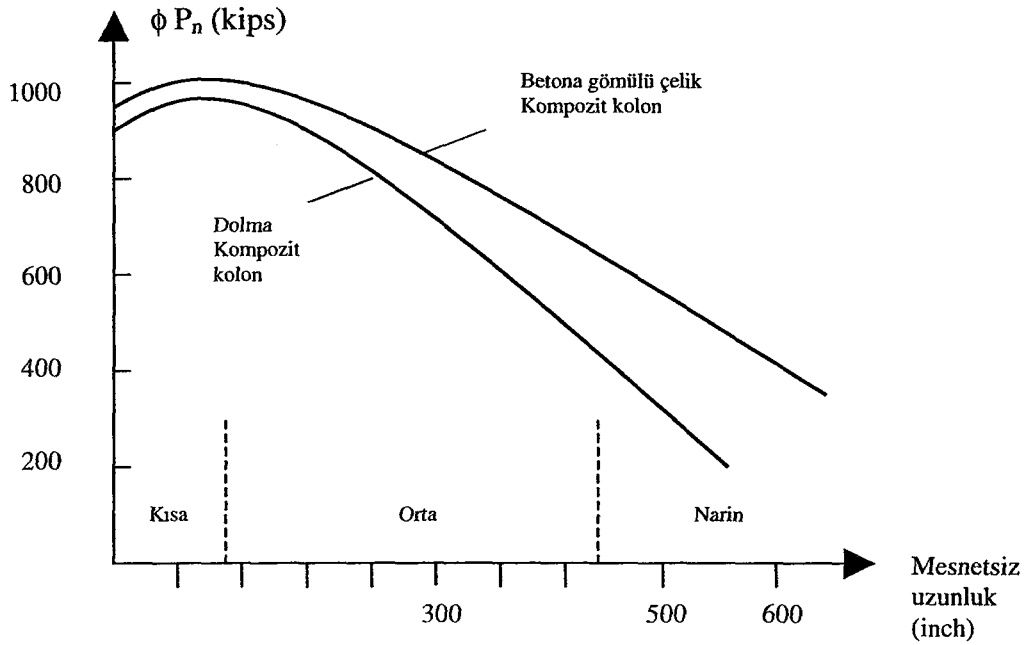

Şekil 2.16 Kompozit kolonların uzunluklarına göre eksenel mukavemet kıyası

3. ÖRNEK ALINAN BİR YAPININ BETONARME PERDELİ VE KOLON-KİRİŞ SİSTEMLİ OLARAK TASARIMI:

Çok katlı yapılar da rüzgâr ve depremden oluşan yatay kuvvetler, yüksekliğe göre daha hızlı olarak artmaktadır. Bu nedenle çok katlı yapılarda yapı mukavemetinin yanında, yatay kuvvetler daha dikkatli incelenmeli ve yeterli rijitlik sağlanmalıdır. Ancak Taşıyıcı sistem tasarımında, yükseklikle beraber artan deprem ve rüzgâr kuvvetlerinin karşılanması artan eleman boyutları olmamalıdır. Bunun için uygun taşıyıcı sistem seçmek gerekir.

Önceleri çok katlı yapıların hesabı için yaklaşık yöntemler kullanılmaktaydı. Ancak bilgisayar teknolojisinin ilerleyişi ile yapılar üç boyutlu olarak modellenip her türlü yük etkisinde daha hızlı olarak çözülebilmektedir. Bu tez çalışmasında STA4-CAD yapı analiz programı kullanılmıştır. Bu program; çok katlı betonarme yapıların statik, deprem, rüzgâr ve betonarme analizini entegre olarak yapabilmektedir. Statik hesaplama metodu olarak **"stiffness method"** kullanılmaktadır. Program çözümlemelerini, yapıdaki en olumsuz yüklemeleri dikkate alarak 16 adet yükleme tipi ile yapmaktadır. (7 adet düşey, 4 adet deprem veya dinamik analiz, 4 adet rüzgâr, 1 adet zemin itkisi)

Mimari planı ve yapının kesiti ekde verilmiştir. Bu yapı 40 katlı olup kat yüksekliği 3.25 m dir. Bina 30.295 x 25.60 m^2 lik alana sahiptir. Taşıyıcı sistem olarak ekde görüldüğü gibi önce perdeli sonrada kolonlu kirişli sistem olarak tasarlanmıştır. Yapıda her katı aynı olup zemin sınıfı Z1 olarak seçilmiş, zemin emniyet gerilmesi olarak 50 t/ m^2 alınmıştır. Betonarmede malzeme olarak Bs30 - S420 seçilmiştir.

3.1 Perdeli Taşıyıcı Sistemin Bilgisayar Programı (STA4-CAD) ile Hesaplanması

3.1.1 Perdeli Taşıyıcı Sistemin Statik ve Betonarme Analiz sonuçları

3.1.2 Perdeli Taşıyıcı Sistemin Metrajı

3.1.1 Perdeli Taşıyıcı Sistemin Statik ve Betonarme Analiz sonuçları:

STA4-CAD V11

FİRMA :	03-23-2005	
PROJE : perdeli sistem		(perdeli.ST4)

STA4-CAD
STructural Analysis FOR Computer Aided Design
VERSION 11.0
Copyright (C) 2003

SERDAR AMASRALI
STA MÜH. MÜŞ. LTD. ŞTİ.

STA4 programi, çok katli betonarme yapilarin 3 boyutlu analizini ve entegre olarak çizimlerini yapan entegre paket programdir. Yapinin tümü için global stifnes matrisi bir defada kurulur ve bloklama tekniği ile deplasmanlar bulunur. Kat düzlemindeki plaklarin yatay düzlemde sonsuz rijitliğini dikkate alarak, kat düzlemindeki dx,dy,qz deplasmanlari için her katta 3 bilinmeyen, eleman uçlarinda dx, dy, qz deplasmanlari için her noktada 3 bilinmeyen kullanarak bir noktada 6 serbestlikli betonarme yapilara özgün stiffnes matrisi ile çözülmektedir. Kiriş ve kolon elemanlarinda kayma deformasyonlari ile burulma etkileri dikkate alinmaktadir.
Denklem takimi; çözümünün hizli olabilmesi için uç nokta numaralari, program tarafindan nokta optimizasyonu ile minimum hafizada çözecek şekilde düzenlenir. Yapi+temel birlikte çözülebilmekte olup, temel stiffnes matrisleri winkler hipotezi ile kurulmaktadir.

Global stiffnes matrisinde dikkate alinan hususlar:
-Kirişlerin kolon ve perdelere içindeki kisimlari, sonsuz rijit alinarak yük ve rijitlik matrislerinin düzenlenmesi.
-Geniş perdelere zayif yönde saplanan kirişlerin, fiktif kolon kontrollu elastik ankastre olarak çözümü.
-Geniş perdelere rijitliği yönünde saplanan kirişlerde, kayma deformasyonlarin dikkate alinmasi.
-Altindaki kolon ile statik eksenlerinde kaçiklik olan kolonlarda, eksenel yük eksantirikliğinin stiffnes matrisinde dikkate alinmasi.
-Dinamik analizde; CQC(Complete Quadratic Combination) metodu ile %5 sönüm yüzdesine göre kuvvetlerin bulunmasi.

STATİK ANALİZ YÜK KOMBİNASYON NOTASYONLARI:

1.	G+G+G+G	: Genel ölü yük
2.	Q+Q+Q+Q	: 1. Genel hareketli yük
3.	Q+o+Q+o+Q	: 2. Hareketli yük
4.	o+Q+o+Q+o	: 3. Hareketli yük
5.	Q+Q+o+Q+Q	: 4. Hareketli yük
6.	o+Q+Q+o+Q	: 5. Hareketli yük
7.	Q+o+Q+Q+o	: 6. Hareketli yük
8.	Gz	: Yatay zemin itkisi
9.	Ex + %5 x ey	: X yönü deprem + %5 eksantrisite
10.	Ex - %5 x ey	: X yönü deprem - %5 eksantrisite
11.	Ey + %5 x ex	: Y yönü deprem + %5 eksantrisite
12.	Ey - %5 x ex	: Y yönü deprem - %5 eksantrisite
13.	Wx + %5 x ey	: X yönü rüzgar + %5 eksantrisite
14.	Wx - %5 x ey	: X yönü rüzgar - %5 eksantrisite
15.	Wy + %5 x ex	: Y yönü rüzgar + %5 eksantrisite
16.	Wy - %5 x ex	: Y yönü rüzgar - %5 eksantrisite

Programda kullanýlan standartlar :
1 - Afet Bölgelerinde Yapilacak Yapilar Hakkinda Yönetmelik (1997)
2 - TS. 498 hareketli ve rüzgar yükü standardi.
3 - TS. 500 betonarme yapilarin hesap standardi.
4 - ACI CODE 318 iki yönlü kirişsiz plaklarin hesabi ve yük kombinasyonu.
5 - EUROCODE yük kombinasyonu.
6 - SNIP CODE yük kombinasyonu.
7 - ACI318-99,UBC97 CODE

PERDE ve KOLONLARDA EKSANTRISITE

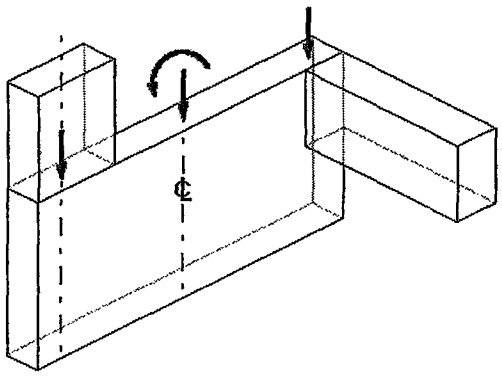

STA4-CAD Perde ve kolonlarda eksenel yük kaçikliklarini opsiyonel olarak dikkate alir. Geometrik akslar, elemanlarin bilgi tanimi içindir. Statik hesaplarda, elemanlarin ağirlikk merkezlerini dikkate alarak gerçek eksenlerle çalişir.
Perdelere zayif yönünde saplanan kirişlerin, düşey plak gibi davranan perdedeki lokal eğilme deformasyonunu sonlu elemanlara eşdeğer yöntemle elastik ankastrelik değerlerine göre opsiyonel çözüm yapabilir.

KAYMA DEFORMASYONU ve RIJITLIK BOLGELERI

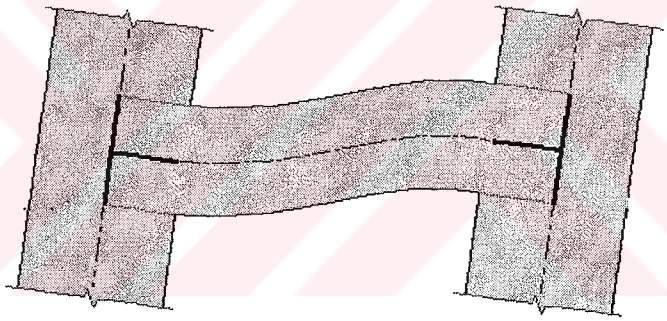

STA4-CAD Perde ve kolonlarda kayma deformasyonlarini rijitlik matrislerinde dikkate alir. Ayni şekilde rijit perdelere bağli kirişlerin kayma deformasyonlarinida perdelerin genişlikleri oraninda dikkate alarak rijitlik matrislerini oluşturur.
Kirişlerin kolon kismindaki bölgeleri, gerekse kolonlarin kiriş kismindaki bölgeleri sonsuz rijit kabul edilerek moment alan teorisi ile sayisal integrasyon yapilarak gerçek rijit matrisi kurularak çözüm yapilir.
Ayni şekilde kirişlerin yük matrisinde kolon kismindaki bölgede sonsuz rijit davranişi dikkate alarak, ankastrelik tesirlerini bulur.

STA4-CAD V11

FİRMA : | 03-23-2005

PROJE : perdeli sistem (perdeli.ST4)

DÖŞEME YÜK ANALİZİ

MARLEY KAP. OD						
Kaplama (MARLEY)	0.050 t/m²	x	0.003 m	:	0.000
Kaplama harcı	2.200 t/m³	x	0.020 m	:	0.044
Tesviye betonu	2.000 t/m³	x	0.030 m	:	0.060
Sıva	2.200 t/m³	x	m	:	0.044
TOPLAM.....				:	0.148
FAYANS KAP. OD					
Kaplama (FAYANS)	2.200 t/m³	x	0.010 m	:	0.022
Kaplama harcı	2.200 t/m³	x	0.020 m	:	0.044
Tesviye betonu	2.000 t/m³	x	0.030 m	:	0.060
Sıva	2.200 t/m³	x	m	:	0.044
TOPLAM.....				:	0.170
KARO KAP. ODA					
Kaplama (KARO MOZAIK)	2.200 t/m³	x	0.020 m	:	0.044
Kaplama harcı	2.200 t/m³	x	0.020 m	:	0.044
Tesviye betonu	2.000 t/m³	x	0.040 m	:	0.080
Sıva	2.200 t/m³	x	m	:	0.044
TOPLAM.....				:	0.212
DUSUK DOSEME					
Kaplama (FAYANS)	2.200 t/m³	x	0.010 m	:	0.022
Kaplama harcı	2.200 t/m³	x	0.030 m	:	0.066
Tesviye betonu	2.000 t/m³	x	0.050 m	:	0.100
Sıva	2.200 t/m³	x	m	:	0.044
Dolgu	1.500 t/m³	x	0.200 m	:	0.300
TOPLAM.....				:	0.532
CATI DOSEMESI					
Kaplama (IZOLASYON)	0.100 t/m²	x	0.050 m	:	0.005
Tesviye betonu	2.000 t/m³	x	0.050 m	:	0.100
Sıva	2.200 t/m³	x	m	:	0.044
TOPLAM.....				:	0.149
MERDIVEN					
Kaplama (MERMER)	2.200 t/m³	x	0.020 m	:	0.044
Kaplama harcı	2.200 t/m³	x	0.020 m	:	0.044
Tesviye betonu	2.000 t/m³	x	0.030 m	:	0.060
Sıva	2.200 t/m³	x	m	:	0.044
TOPLAM.....				:	0.192

(Döşeme zatileri, döşeme yük hesabında ilave edilecek)

STAA-CAD V11

FİRMA :	03-23-2005	
PROJE : perdeli sistem		(perdeli.ST4)

GENEL BETONARME CIZIM OPSIYONLARI

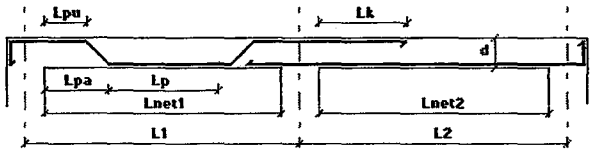

Maximum demir boyu.....cm.= 1200
Minimum demir bindirme boyu orani.....= ø x 50
min. Lp.....= Lnet1 /2
Lpa.....= Lnet1 /5
min. Lpu.....cm.= 30
min. Lpu .....= d /2
min. Lk .....= Lnet2 /4
Pilye kayma donatisi katilim orani.....= 0
Genel kanca boyu .....= ø x 10
Kiriş donatisinin, kolon içindeki aderans boyu.....= ø x 50
Kirişlerde sik etriye opsiyonu.....= zorunlu
Kirişlerde Pilye opsiyonu.....= pilyeli
Minimum pilye açiklik orani.....= Lnet/2
Tek donatilarda, pilye ve düz donati tercihi.....= düz

KIRIS BETONARME OPSIYONLARI

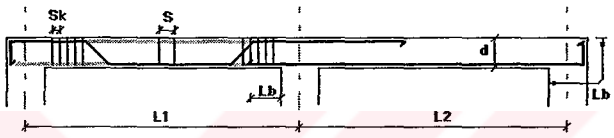

Paspayi.....cm.= 4
Min. boyuna kesit pursantaji .....= .009
Min. çekme bölgesi TS500-2000 'e göre .....= 0.0028
As min= 0.8 x fctd / fyd alinacaktir.
Minimum düz ve pilye donati çapi .....ø.= 16
Minimum montaj donati çapi .....ø.= 14
Minimum gövde donati çapi .....ø.= 16
Minimum etriye donati çapi .....ø.= 10
Pilye açisi.....°.= 45
Minimum gövde demirsiz kiriş yüksekliği.....cm.= 59
Minimum düz ve montaj demir aralığı .....cm.= 20
Kayma donatisi beton katilim orani.....= .8
Süreklilik icin max. kolon genişliği.....cm.= 200
Minimum montaj donati orani .....(% maxAs).= .25
Maximum etriye aralığı..S.....cm.= 20
Minimum etriye aralığı..S.....cm.= 10
Maximum etriye aralığı. Sk.(1).....cm.= 15
Maximum etriye aralığı. Sk.(2).....= d/4
Maximum etriye aralığı. Sk.(3).....= ø x 8
Maksimum tek etriye genişliği .....cm.= 40
min.(alt As/üst As) .....= .5
min.üst As=Fctd/Fyd .....= Evet
min Lb =.....= ø x 50

ST4-CAD V11

FİRMA :	03-23-2005
PROJE : perdeli sistem	(perdeli.ST4)

KOLON-PERDE BETONARME OPSIYONLARI

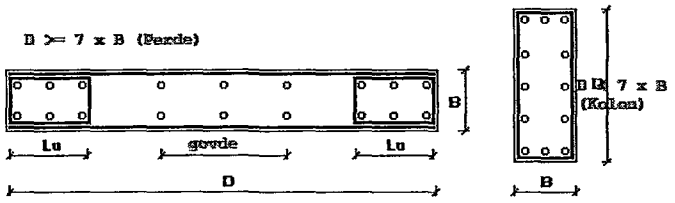


```
KOLON ve PERDELERIN betonarme opsiyonlari          :
Paspayi.........................................cm.= 4
Min.kolon çekme bölgesi.........................= .0025
Min.kolon toplam kesit .........................= .01
Kolon eksenel yük eksantirisite etkisinin alinmasi..= evet
Minimum etriye aralıği..........................cm.= 10
Maximum etriye aralıği (1)......................cm.= 20
Maximum etriye aralıği (2)....................min.= ø x 12
Minimum çiroz aralıği........................min.= ø x 25
Minimum donati çapi ......................ø.......= 14
Minimum etriye çapi ......................ø.......= 8
Perde/Kolon orani  (D/B)........................= 7
Perde uzun etriyelerinde gönye...................= Gönyeli
Nervürlü etriye kanca acisi............ (90ø,135ø)= 135
min.Hcr yuksekliği ............................< D x 2
max.Hcr yuksekliği ............................>= D x 1
max.Hcr yuksekliği ............................>= Hw/6
Min.başlik bölgesi.(Hcr)........................= .002
Min.başlik bölgesi..............................= .001
Min.gövde bölgesi...............................= .0025
Min.başlik bölgesi.............................Lu= 20 cm
Min.başlik bölgesi.(Hcr)......................Lu=B x 2
Min.başlik bölgesi.(Hcr)......................Lu=D x .2
Min.başlik bölgesi............................Lu=B x 1
Min.başlik bölgesi............................Lu=D x .1
Başlik bölgesi min. donati çapi ..............ø..= 14
Gövde  bölgesi min. donati çapi ..............ø..= 12
Perdelerde tasarim eğilme momenti...............= Evet
```

TEMEL BETONARME OPSIYONLARI

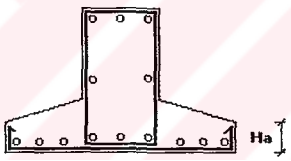


```
Paspayi.........................................cm.= 7
Min. çekme bölgesi  TS500-2000 (As min=0,8.fctd/fyd).= 0.0028
Min. toplam kesit ..............................= .005
Minimum basinç bölgesi donati orani ............= .332
Pilye açisi.....................................= 60
Minimum etriye aralıği..........................cm.= 10
Maximum etriye aralıği..........................cm.= 20
Maximum etriye genisliği........................cm.= 60
Minimum düz ve montaj demir aralıği ............cm.= 20
Temelde, Kolon donati filiz boyu................cm.= 50
Müt. temel min. etriye çapi.....................ø..= 8
Müt. temel min. düz ve pilye çapi...............ø..= 12
Müt. temel min. montaj çapi.....................ø..= 12
Müt. temel min. gövde çapi......................ø..= 10
Temel min. ampatman çapi........................ø..= 12
Ampatman kenar yüksekliği.(Ha)..................cm.= 20
```

STA4-CAD V11

FİRMA :	03-23-2005
PROJE : perdeli sistem	(perdeli.ST4)

STA4-CAD PROGRAMI

ÇOK KATLI BETONARME YAPILARIN STATİK ve BETONARME ANALİZ PROGRAMI Ver.11.0 (code:EPS)

PROJE İSMİ.....:perdeli
KAT ADEDİ.....: 40
Bir kattaki KOLON SAYISI.....: 44
X yönü aks sayisi.....: 12
Y yönü aks sayisi.....: 12
DEPREM KATSAYISI.....(Ao).: .4
YAPI TİPİ KATSAYISI.....(R)..: 7
YAPI ÖNEM KATSAYISI.....(I)..: 1
ZEMİN HAKİM TİTREŞİM PERYODU..(Ta/Tb).: .1 / .3
HAREKETLİ YÜK KATSAYISI.....(n)..: .3
SIFIR RÖLATİF HAREKET YÜKSEKLİĞİ (m)..:.00
ZEMİN EMNİYET GERİLMESİ..... (t/m²)..:50.0
ZEMİN YATAK KATSAYISI..... (t/m³)..:10000.0
BETON YOĞUNLUĞU.....(t/m³)..:2.5
DEPREM STANDARDI .....:TDY97 CODE
BETONARME HESAP YÖNTEMİ .....:TAŞIMA GÜCÜ YÖNTEMİ TS500-2000
BETONARME KESİT DONATI HESAP YÖNTEMİ .....:BRÜT KESİTE GÖRE
DEPREM HESABI YÖNTEMİ .....:MOD SÜPERPOZİSYONU İLE DİNAMİK ANALİZ
TEMEL ANALİZ OPSİYONU.....:TEMELLER DİKKATE ALINMADAN, YAPI ANALİZİ
Zemin gerilmesi hareketli yük azaltma degeri..:.80
Zemin gerilmesi deprem azaltmasi.....:.50
Zemin gerilmesi rüzgar azaltmasi.....:.25
Kolonun oturduğu kiriş tesir çarpani.....: 1.5
Kiriş & Kolon rijitlik bölgesi opsiyonu.....: Yarim Rijit davranış
Kiriş uçlarında elastik ankastrelik opsiyonu : Elastik ankastre

BETON ve ÇELİK MALZEME BİLGİLERİ (kg/cm²)

Yapi Elemani	Malzeme	Elastisite Modülü E	G	Beton dayanim gerilmesi	Çelik akma (Genel)	gerilmesi (Etriye)
Döşeme	BS30	318000	127200	300	4200	4200
Temel	BS30	318000	127200	300	4200	4200
Kiriş\Kolon E1	BS30	318000	127200	300	4200	4200

TAŞIMA GÜCÜ MALZEME KATSAYILARI	BETON 1.50	ÇELİK 1.15
TAŞIMA GÜCÜ YÜK KATSAYILARI	SABİT YÜK 1.40	HAREKETLİ YÜK 1.60

BETONARME HESAP YÜK KOMBİNASYONU

Ölü yük Cg	Hareketli yük Cq	Zemin Cz	Deprem ± Ce	Rüzgar ± Cw
1.40	1.60	0.00	0.00	0.00
1.40	1.60	1.60	0.00	0.00
1.40	0.00	0.00	0.00	0.00
1.00	1.00	0.00	1.00	0.00
1.00	1.00	1.00	1.00	0.00
0.90	0.00	0.00	1.00	0.00
1.00	1.30	0.00	0.00	1.30
1.00	1.30	1.00	0.00	1.30
0.90	0.00	0.00	0.00	1.30
0.90	0.00	0.90	0.00	1.30

CODE:TS500T.COD

ZEMİN GERİLMESİ YÜK KOMBİNASYONU

Ölü yük Cg	Hareketli yük Cq	Zemin Cz	Deprem ± Ce	Rüzgar ± Cw
1.00	1.00	0.00	0.00	0.00
1.00	1.00	1.00	0.00	0.00
0.67	0.67	0.67	0.67	0.00
0.80	0.00	0.80	0.00	0.80

ZEMİN GERİLMESİ HAREKETLİ YÜK AZALTMA DEĞERLERİ

Kat	1	2	3	4	5	6	7	8	9	10
Eksiltme %				20	40	60	80	80	80	40

ST4-CAD V11

FİRMA : 03-23-2005

PROJE : perdeli sistem (perdeli.ST4)

YAPI AKS BİLGİLERİ

X yönü aks bilgileri

no	isim	Ax	Bx
1	1	0.00	0.00
2	2	0.00	3.50
3	3	0.00	8.05
4	4	0.00	10.85
5	5	0.00	12.65
6	6	0.00	13.65
7	7	0.00	15.05
8		0.00	16.45
9		0.00	17.45
10		0.00	19.25
11		0.00	22.06
12		0.00	26.60
13		0.00	30.10

Y yönü aks bilgileri

no	isim	Ay	By
1	A	0.00	0.00
2	B	0.00	1.23
3	C	0.00	3.86
4	D	0.00	5.78
5	E	0.00	6.80
6	F	0.00	8.81
7	G	0.00	9.50
8	H	0.00	11.48
9	I	0.00	14.57
10	J	0.00	19.57
11	K	0.00	24.12
12	L	0.00	25.35

1. KAT KOLONLARI AKS BİLGİLERİ

Kolon no	X aksi	Y aksi	dx	dy	alt yük.
101	4	1	0.0	0.0	0.00
103	10	1	0.0	0.0	0.00
105	12	2	0.0	0.0	0.00
107	7	3	0.0	0.0	0.00
109	1	4	0.0	0.0	0.00
111	4	4	0.0	0.0	0.00
113	12	4	0.0	0.0	0.00
115	5	5	0.0	0.0	0.00
117	5	6	0.0	0.0	0.00
119	4	8	0.0	0.0	0.00
121	8	8	0.0	0.0	0.00
123	1	9	0.0	0.0	0.00
125	4	9	0.0	0.0	0.00
127	7	9	0.0	0.0	0.00
129	10	9	0.0	0.0	0.00
131	13	9	0.0	0.0	0.00
133	2	10	0.0	0.0	0.00
135	11	10	0.0	0.0	0.00
137	13	10	0.0	0.0	0.00
139	3	11	0.0	0.0	0.00
141	12	11	0.0	0.0	0.00
143	7	12	0.0	0.0	0.00

Kolon no	X aksi	Y aksi	dx	dy	alt yük.
102	7	1	0.0	0.0	0.00
104	2	2	0.0	0.0	0.00
106	4	3	0.0	0.0	0.00
108	10	3	0.0	0.0	0.00
110	2	4	0.0	0.0	0.00
112	10	4	0.0	0.0	0.00
114	13	4	0.0	0.0	0.00
116	9	5	0.0	0.0	0.00
118	9	6	0.0	0.0	0.00
120	6	8	0.0	0.0	0.00
122	10	8	0.0	0.0	0.00
124	3	9	0.0	0.0	0.00
126	6	9	0.0	0.0	0.00
128	8	9	0.0	0.0	0.00
130	11	9	0.0	0.0	0.00
132	1	10	0.0	0.0	0.00
134	3	10	0.0	0.0	0.00
136	12	10	0.0	0.0	0.00
138	2	11	0.0	0.0	0.00
140	11	11	0.0	0.0	0.00
142	3	12	0.0	0.0	0.00
144	11	12	0.0	0.0	0.00

STAA-CAD V11

FİRMA :	03-23-2005	
PROJE : perdeli sistem		(perdeli.ST4)

KAT DIYAFRAMLARI

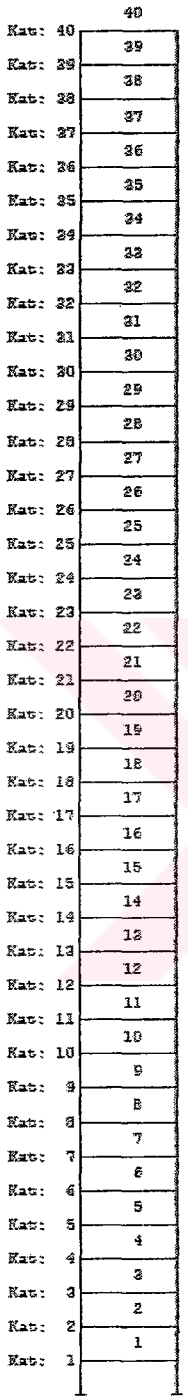

FİRMA :	03-23-2005
PROJE : perdeli sistem	(perdeli.ST4)

DEPREM RAPORU

DEPREM STANDARDI : TDY97 CODE
Deprem yükü eksantirisitesi : 0.050
DİYAFRAM SAYISI : 40
Diyafram tanimi : KAT(diyafram no)
Dinamik Analiz min. deprem yükü orani β : 1.0
YAPI DAVRANIŞ KATSAYISI : 7.00

DİNAMİK ANALİZ BİLGİLERİ

TASARIM SPECTRUM BİLGİSİ (TDY97 SPECTRUM)

T (s)	Sa (m/s²) Ao.I.S(t)
0.00	4.000
0.10	10.000
0.20	10.000
0.40	7.944
0.50	6.644
0.60	5.744
0.70	5.076
0.80	4.564
0.90	4.152
1.00	3.816
1.10	3.536
1.20	3.300
1.30	3.096
1.40	2.916
1.50	2.800
5.00	2.800

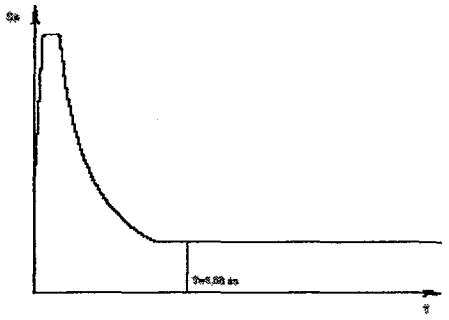

MODAL ANALİZ - YAPI PERYOD ve VEKTÖRLERİ

Mod w T yön	1.mod 3.24 1.8827 y	2.mod 3.81 1.6478 x	3.mod 4.17 1.5066 h	4.mod 12.78 0.4917 h	5.mod 13.40 0.4688 y	6.mod 15.14 0.4149 x	7.mod 23.21 0.2707 h	8.mod 28.89 0.2175 y	9.mod 32.50 0.1934 x
1/1x	0.00000	0.00023	-0.00009	0.00016	0.00000	0.00219	0.00014	0.00000	0.00509
2/2x	0.00000	0.00067	-0.00023	0.00047	0.00000	0.00565	0.00040	0.00000	0.01270
3/3x	0.00000	0.00128	-0.00041	0.00088	0.00000	0.00980	0.00074	0.00000	0.02127
4/4x	0.00000	0.00204	-0.00062	0.00138	0.00000	0.01487	0.00116	0.00000	0.03001
5/5x	0.00000	0.00294	-0.00085	0.00195	0.00000	0.01917	0.00163	0.00000	0.03830
6/6x	0.00000	0.00396	-0.00111	0.00258	0.00000	0.02404	0.00213	0.00000	0.04568
7/7x	0.00000	0.00509	-0.00139	0.00323	0.00000	0.02889	0.00262	0.00000	0.05173
8/8x	0.00000	0.00624	-0.00169	0.00390	0.00000	0.03355	0.00308	0.00000	0.05632
9/9x	0.00000	0.00769	-0.00201	0.00456	0.00000	0.03805	0.00349	0.00000	0.05907
10/10x	0.00000	0.00914	-0.00235	0.00519	0.00000	0.04221	0.00382	0.00000	0.05991
11/11x	0.00000	0.01068	-0.00272	0.00578	0.00000	0.04599	0.00405	0.00000	0.05877
12/12x	0.00000	0.01230	-0.00310	0.00631	0.00000	0.04932	0.00418	0.00000	0.05568
13/13x	0.00000	0.01400	-0.00352	0.00678	0.00000	0.05214	0.00421	0.00000	0.05074
14/14x	0.00000	0.01578	-0.00395	0.00718	0.00000	0.05440	0.00412	0.00000	0.04411
15/15x	0.00000	0.01763	-0.00440	0.00748	0.00000	0.05607	0.00392	0.00000	0.03602
16/16x	0.00000	0.01955	-0.00488	0.00770	0.00000	0.05710	0.00363	0.00000	0.02676
17/17x	0.00000	0.02152	-0.00537	0.00782	0.00000	0.05747	0.00325	0.00000	0.01665
18/18x	0.00000	0.02355	-0.00589	0.00784	0.00000	0.05716	0.00280	0.00000	0.00606
19/19x	0.00000	0.02563	-0.00642	0.00775	0.00000	0.05616	0.00230	0.00000	-0.00463
20/20x	0.00000	0.02776	-0.00698	0.00757	0.00000	0.05442	0.00176	0.00000	-0.01503
21/21x	0.00000	0.02993	-0.00754	0.00728	0.00000	0.05211	0.00119	0.00000	-0.02477
22/22x	0.00000	0.03214	-0.00813	0.00690	0.00000	0.04908	0.00063	0.00000	-0.03350
23/23x	0.00000	0.03437	-0.00873	0.00642	0.00000	0.04541	0.00009	0.00000	-0.04088
24/24x	0.00000	0.03664	-0.00934	0.00586	0.00000	0.04113	-0.00042	0.00000	-0.04666
25/25x	0.00000	0.03893	-0.00997	0.00522	0.00000	0.03628	-0.00087	0.00000	-0.05060
26/26x	0.00000	0.04124	-0.01061	0.00450	0.00000	0.03090	-0.00126	0.00000	-0.05257
27/27x	0.00000	0.04356	-0.01126	0.00372	0.00000	0.02505	-0.00158	0.00000	-0.05247
28/28x	0.00000	0.04590	-0.01191	0.00288	0.00000	0.01879	-0.00182	0.00000	-0.05029
29/29x	0.00000	0.04824	-0.01258	0.00200	0.00000	0.01216	-0.00197	0.00000	-0.04610
30/30x	0.00000	0.05059	-0.01325	0.00108	0.00000	0.00525	-0.00203	0.00000	-0.04002
31/31x	0.00000	0.05293	-0.01392	0.00013	0.00000	-0.00190	-0.00200	0.00000	-0.03226
32/32x	0.00000	0.05527	-0.01460	-0.00084	0.00000	-0.00920	-0.00188	0.00000	-0.02306
33/33x	0.00000	0.05760	-0.01529	-0.00182	0.00000	-0.01659	-0.00168	0.00000	-0.01272
34/34x	0.00001	0.05993	-0.01597	-0.00280	0.00000	-0.02408	-0.00140	0.00000	-0.00159
35/35x	0.00001	0.06224	-0.01665	-0.00378	0.00000	-0.03137	-0.00104	0.00000	0.01000
36/36x	0.00001	0.06453	-0.01733	-0.00476	0.00000	-0.03864	-0.00062	0.00000	0.02169
37/37x	0.00001	0.06680	-0.01801	-0.00573	0.00000	-0.04576	-0.00012	0.00000	0.03314
38/38x	0.00001	0.06906	-0.01868	-0.00669	0.00000	-0.05268	0.00042	0.00000	0.04406
39/39x	0.00001	0.07130	-0.01934	-0.00763	0.00000	-0.05938	0.00105	0.00000	0.05421
40/40x	0.00001	0.07352	-0.02000	-0.00857	0.00000	-0.06585	0.00171	0.00000	0.06350
1/1y	0.00024	0.00000	0.00000	0.00000	0.00217	0.00000	0.00000	0.00528	0.00000
2/2y	0.00071	0.00000	0.00000	0.00000	0.00567	0.00000	0.00000	0.01278	0.00000
3/3y	0.00136	0.00000	0.00000	0.00000	0.00986	0.00000	0.00000	0.02146	0.00000
4/4y	0.00216	0.00000	0.00000	0.00000	0.01448	0.00000	0.00000	0.03020	0.00000
5/5y	0.00309	0.00000	0.00000	0.00000	0.01922	0.00000	0.00000	0.03870	0.00000
6/6y	0.00415	0.00000	0.00000	0.00000	0.02426	0.00000	0.00000	0.04620	0.00000

STAA-CAD V11

FİRMA : 03-23-2005

PROJE : perdeli sistem (perdeli.ST4)

7/7y	0.00533	0.00000	0.00000	0.00000	0.02916	0.00000	0.00000	0.05240	0.00000	
8/8y	0.00663	0.00000	0.00000	0.00000	0.03392	0.00000	0.00000	0.05701	0.00000	
9/9y	0.00802	0.00000	0.00000	0.00000	0.03845	0.00000	0.00000	0.05982	0.00000	
10/10y	0.00952	0.00000	0.00000	0.00000	0.04267	0.00000	0.00000	0.06069	0.00000	
11/11y	0.01111	0.00000	0.00000	0.00000	0.04649	0.00000	0.00000	0.05955	0.00000	
12/12y	0.01278	0.00000	0.00000	0.00000	0.04986	0.00000	0.00000	0.05642	0.00000	
13/13y	0.01454	0.00000	0.00000	0.00000	0.05271	0.00000	0.00000	0.05141	0.00000	
14/14y	0.01638	0.00000	0.00000	0.00000	0.05500	0.00000	0.00000	0.04465	0.00000	
15/15y	0.01829	0.00000	0.00000	0.00000	0.05667	0.00000	0.00000	0.03648	0.00000	
16/16y	0.02026	0.00000	0.00000	0.00000	0.05770	0.00000	0.00000	0.02707	0.00000	
17/17y	0.02230	0.00000	0.00000	0.00000	0.05805	0.00000	0.00000	0.01682	0.00000	
18/18y	0.02439	0.00000	0.00000	0.00000	0.05772	0.00000	0.00000	0.00607	0.00000	
19/19y	0.02654	0.00000	0.00000	0.00000	0.05669	0.00000	0.00000	-0.00477	0.00000	
20/20y	0.02873	0.00000	0.00000	0.00000	0.05496	0.00000	0.00000	-0.01532	0.00000	
21/21y	0.03097	0.00000	0.00000	0.00000	0.05255	0.00000	0.00000	-0.02520	0.00000	
22/22y	0.03325	0.00000	0.00000	0.00000	0.04946	0.00000	0.00000	-0.03402	0.00000	
23/23y	0.03556	0.00000	0.00000	0.00000	0.04573	0.00000	0.00000	-0.04150	0.00000	
24/24y	0.03790	0.00000	0.00000	0.00000	0.04139	0.00000	0.00000	-0.04733	0.00000	
25/25y	0.04026	0.00000	0.00000	0.00000	0.03646	0.00000	0.00000	-0.05139	0.00000	
26/26y	0.04265	0.00000	0.00000	0.00000	0.03103	0.00000	0.00000	-0.05325	0.00000	
27/27y	0.04505	0.00000	0.00000	0.00000	0.02512	0.00000	0.00000	-0.05311	0.00000	
28/28y	0.04746	0.00000	0.00000	0.00000	0.01879	0.00000	0.00000	-0.05087	0.00000	
29/29y	0.04988	0.00000	0.00000	0.00000	0.01210	0.00000	0.00000	-0.04658	0.00000	
30/30y	0.05231	0.00000	0.00000	0.00000	0.00512	0.00000	0.00000	-0.04039	0.00000	
31/31y	0.05473	-0.00001	0.00000	0.00000	-0.00298	0.00000	0.00000	-0.03250	0.00000	
32/32y	0.05716	-0.00001	0.00000	0.00000	-0.00943	0.00000	0.00000	-0.02317	0.00000	
33/33y	0.05957	-0.00001	0.00000	0.00000	-0.01687	0.00000	0.00000	-0.01269	0.00000	
34/34y	0.06197	-0.00001	0.00000	0.00000	-0.02433	0.00000	0.00000	-0.00142	0.00000	
35/35y	0.06436	-0.00001	0.00000	0.00000	-0.03175	0.00000	0.00000	0.01029	0.00000	
36/36y	0.06674	-0.00001	0.00000	0.00000	-0.03905	0.00000	0.00000	0.02208	0.00000	
37/37y	0.06909	-0.00001	0.00000	0.00000	-0.04620	0.00000	0.00000	0.03360	0.00000	
38/38y	0.07142	-0.00001	0.00000	0.00000	-0.05316	0.00000	0.00000	0.04456	0.00000	
39/39y	0.07375	-0.00001	0.00000	0.00000	-0.05988	0.00000	0.00000	0.05472	0.00000	
40/40y	0.07605	-0.00001	0.00000	0.00000	-0.06638	0.00000	0.00000	0.06398	0.00000	
1/1b	0.00000	0.00001	0.00007	0.00023	0.00000	-0.00007	0.00048	0.00000	-0.00015	
2/2b	0.00000	0.00004	0.00017	0.00061	0.00000	-0.00016	0.00122	0.00000	-0.00036	
3/3b	0.00000	0.00007	0.00031	0.00105	0.00000	-0.00026	0.00203	0.00000	-0.00057	
4/4b	0.00000	0.00010	0.00045	0.00153	0.00000	-0.00036	0.00285	0.00000	-0.00076	
5/5b	0.00000	0.00014	0.00061	0.00202	0.00000	-0.00046	0.00361	0.00000	-0.00089	
6/6b	0.00000	0.00018	0.00078	0.00252	0.00000	-0.00054	0.00427	0.00000	-0.00097	
7/7b	0.00000	0.00023	0.00096	0.00300	0.00000	-0.00061	0.00480	0.00000	-0.00099	
8/8b	0.00000	0.00027	0.00115	0.00345	0.00000	-0.00068	0.00518	0.00000	-0.00095	
9/9b	0.00000	0.00032	0.00133	0.00387	0.00000	-0.00073	0.00537	0.00000	-0.00085	
10/10b	0.00000	0.00037	0.00152	0.00425	0.00000	-0.00076	0.00538	0.00000	-0.00070	
11/11b	0.00000	0.00042	0.00172	0.00458	0.00000	-0.00075	0.00519	0.00000	-0.00051	
12/12b	0.00000	0.00047	0.00191	0.00485	0.00000	-0.00080	0.00481	0.00000	-0.00030	
13/13b	0.00000	0.00052	0.00210	0.00506	0.00000	-0.00080	0.00426	0.00000	-0.00007	
14/14b	0.00000	0.00058	0.00229	0.00519	0.00000	-0.00075	0.00355	0.00000	0.00016	
15/15b	0.00000	0.00063	0.00248	0.00526	0.00000	-0.00077	0.00271	0.00000	0.00037	
16/16b	0.00000	0.00068	0.00267	0.00526	0.00000	-0.00074	0.00177	0.00000	0.00055	
17/17b	0.00000	0.00073	0.00286	0.00518	0.00000	-0.00070	0.00077	0.00000	0.00069	
18/18b	0.00000	0.00078	0.00304	0.00502	0.00000	-0.00065	-0.00026	0.00000	0.00078	
19/19b	0.00000	0.00083	0.00322	0.00480	0.00000	-0.00059	-0.00127	0.00000	0.00082	
20/20b	0.00000	0.00087	0.00339	0.00451	0.00000	-0.00053	-0.00223	0.00000	0.00081	
21/21b	0.00000	0.00092	0.00356	0.00415	0.00000	-0.00046	-0.00311	0.00000	0.00074	
22/22b	0.00000	0.00097	0.00372	0.00373	0.00000	-0.00039	-0.00386	0.00000	0.00062	
23/23b	0.00000	0.00101	0.00388	0.00326	0.00000	-0.00031	-0.00446	0.00000	0.00049	
24/24b	0.00000	0.00105	0.00403	0.00274	0.00000	-0.00023	-0.00485	0.00000	0.00031	
25/25b	0.00000	0.00110	0.00418	0.00218	0.00000	-0.00015	-0.00512	0.00000	0.00013	
26/26b	0.00000	0.00113	0.00432	0.00158	0.00000	-0.00008	-0.00515	0.00000	-0.00006	
27/27b	0.00000	0.00117	0.00445	0.00096	0.00000	0.00000	-0.00498	0.00000	-0.00024	
28/28b	0.00000	0.00121	0.00458	0.00032	0.00000	0.00007	-0.00461	0.00000	-0.00039	
29/29b	0.00000	0.00124	0.00470	-0.00032	0.00000	0.00015	-0.00406	0.00000	-0.00051	
30/30b	0.00000	0.00128	0.00481	-0.00099	0.00000	0.00021	-0.00334	0.00000	-0.00059	
31/31b	0.00000	0.00131	0.00491	-0.00163	0.00000	0.00027	-0.00248	0.00000	-0.00062	
32/32b	0.00000	0.00134	0.00501	-0.00226	0.00000	0.00033	-0.00151	0.00000	-0.00060	
33/33b	0.00000	0.00136	0.00510	-0.00287	0.00000	0.00038	-0.00047	0.00000	-0.00054	
34/34b	0.00000	0.00139	0.00518	-0.00344	0.00000	0.00042	0.00062	0.00000	-0.00042	
35/35b	0.00000	0.00141	0.00526	-0.00399	0.00000	0.00046	0.00171	0.00000	-0.00027	
36/36b	0.00000	0.00143	0.00532	-0.00449	0.00000	0.00049	0.00277	0.00000	-0.00009	
37/37b	0.00000	0.00145	0.00539	-0.00495	0.00000	0.00051	0.00376	0.00000	0.00011	
38/38b	0.00000	0.00147	0.00544	-0.00538	0.00000	0.00052	0.00467	0.00000	0.00032	
39/39b	0.00000	0.00149	0.00549	-0.00572	0.00000	0.00052	0.00547	0.00000	0.00053	
40/40b	0.00000	0.00150	0.00554	-0.00606	0.00000	0.00052	0.00615	0.00000	0.00073	
Mxr%	0.000	60.881	4.187	0.381	0.000	20.300	0.061	0.000	5.353	Σ= 91.2
Myr%	65.214	0.000	0.000	0.000	20.602	0.000	0.000	5.480	0.000	Σ= 91.3
Mbx%	0.000	4.902	71.596	18.534	0.000	0.319	4.262	0.000	0.079	

Mxr=∑[(∑m.+)²/Mr]= %91.16 > %90.00 Dinamik kütle orani yeterli. ✓
Myr=∑[(∑m.+)²/Mr]= %91.30 > %90.00 Dinamik kütle orani yeterli. ✓

EŞDEĞER DEPREM HESABI 1. DOĞAL TİTREŞİM PERYODUNUN KONTROLU
Hn=138.00m ∑Atx= 0.000 >> Ctx= 0.050 ∑Aty= 0.000 >> Cty= 0.050

$T1x=Ctx \cdot Hn^{3/4}$ = 1.925 s. > 1.0 Tx= 1.646 s. < 1.3 x 1.925 s. ✓

$T1y=Cty \cdot Hn^{3/4}$ = 1.925 s. > 1.0 Ty= 1.883 s. < 1.3 x 1.925 s. ✓

STAA-CAD V11

FİRMA : 03-23-2005

PROJE : perdeli sistem (perdeli.ST4)

KAT KÜTLESİ ve RİJİTLİK MERKEZİ (t)

Kat (dyf)	H (m)	Wg	Wq	Xg (m)	Xr (m)	Yg (m)	Yr (m)	∑Wk
40	130.00	1489.53	127.67	15.05	15.05	12.45	11.16	1527.835
39	126.75	1489.53	127.67	15.05	15.05	12.45	11.16	1527.835
38	123.50	1489.53	127.67	15.05	15.05	12.45	11.16	1527.835
37	120.25	1489.53	127.67	15.05	15.05	12.45	11.16	1527.835
36	117.00	1489.53	127.67	15.05	15.05	12.45	11.16	1527.835
35	113.75	1489.53	127.67	15.05	15.05	12.45	11.16	1527.835
34	110.50	1489.53	127.67	15.05	15.05	12.45	11.16	1527.835
33	107.25	1489.53	127.67	15.05	15.05	12.45	11.16	1527.835
32	104.00	1489.53	127.67	15.05	15.05	12.45	11.16	1527.835
31	100.75	1489.53	127.67	15.05	15.05	12.45	11.16	1527.835
30	97.50	1489.53	127.67	15.05	15.05	12.45	11.16	1527.835
29	94.25	1489.53	127.67	15.05	15.05	12.45	11.16	1527.835
28	91.00	1489.53	127.67	15.05	15.05	12.45	11.16	1527.835
27	87.75	1489.53	127.67	15.05	15.05	12.45	11.16	1527.835
26	84.50	1489.53	127.67	15.05	15.05	12.45	11.16	1527.835
25	81.25	1489.53	127.67	15.05	15.05	12.45	11.16	1527.835
24	78.00	1489.53	127.67	15.05	15.05	12.45	11.16	1527.835
23	74.75	1489.53	127.67	15.05	15.05	12.45	11.16	1527.835
22	71.50	1489.53	127.67	15.05	15.05	12.45	11.16	1527.835
21	68.25	1489.53	127.67	15.05	15.05	12.45	11.16	1527.835
20	65.00	1489.53	127.67	15.05	15.05	12.45	11.16	1527.835
19	61.75	1489.53	127.67	15.05	15.05	12.45	11.16	1527.835
18	58.50	1489.53	127.67	15.05	15.05	12.45	11.16	1527.835
17	55.25	1489.53	127.67	15.05	15.05	12.45	11.16	1527.835
16	52.00	1489.53	127.67	15.05	15.05	12.45	11.16	1527.835
15	48.75	1489.53	127.67	15.05	15.05	12.45	11.16	1527.835
14	45.50	1489.53	127.67	15.05	15.05	12.45	11.16	1527.835
13	42.25	1489.53	127.67	15.05	15.05	12.45	11.16	1527.835
12	39.00	1489.53	127.67	15.05	15.05	12.45	11.16	1527.835
11	35.75	1489.53	127.67	15.05	15.05	12.45	11.16	1527.835
10	32.50	1489.53	127.67	15.05	15.05	12.45	11.16	1527.835
9	29.25	1489.53	127.67	15.05	15.05	12.45	11.16	1527.835
8	26.00	1489.53	127.67	15.05	15.05	12.45	11.16	1527.835
7	22.75	1489.53	127.67	15.05	15.05	12.45	11.16	1527.835
6	19.50	1489.53	127.67	15.05	15.05	12.45	11.16	1527.835
5	16.25	1489.53	127.67	15.05	15.05	12.45	11.16	1527.835
4	13.00	1489.53	127.67	15.05	15.05	12.45	11.16	1527.835
3	9.75	1489.53	127.67	15.05	15.05	12.45	11.16	1527.835
2	6.50	1489.53	127.67	15.05	15.05	12.45	11.16	1527.835
1	3.25	1489.53	127.67	15.05	15.05	12.45	11.16	1527.835

$\sum W_k$ = 61113.402

EŞDEĞER DEPREM FORMÜLÜ $F_{di} = (V_t - F_t)\dfrac{W_i . H_i}{\sum W_i . H_i}$

FİRMA : 03-23-2005

PROJE : perdeli sistem (perdeli.ST4)

DEPREM KUVVETİ (t)
Deprem tepe yükü Ftx= 281.97 Fty= 322.17 (t)

Kat (dyf)	X YÖNÜ Modal Analiz	X YÖNÜ Eşdeğer dep.yün.	X YÖNÜ Deprem yükü	Y YÖNÜ Modal Analiz	Y YÖNÜ Eşdeğer dep.yün.	Y YÖNÜ Deprem yükü	Kat tipi
40	186.384	387.457	219.672	176.690	425.700	224.663	ÜST KAT
39	160.796	102.854	189.514	151.609	108.942	192.772	NORMAL
38	137.071	100.217	161.552	128.368	98.354	163.221	NORMAL
37	116.446	97.579	137.242	108.162	95.765	137.531	NORMAL
36	98.339	94.942	115.901	90.485	93.177	115.852	NORMAL
35	82.327	92.305	97.030	74.962	90.589	95.315	NORMAL
34	68.246	89.668	80.434	61.466	88.001	78.155	NORMAL
33	56.032	87.030	66.040	49.962	85.412	63.527	NORMAL
32	45.662	84.393	53.817	40.428	82.824	51.404	NORMAL
31	37.119	81.756	43.748	32.818	80.236	41.728	NORMAL
30	30.363	79.118	35.786	27.041	77.648	34.383	NORMAL
29	25.317	76.481	29.839	22.960	75.059	29.193	NORMAL
28	21.874	73.844	25.780	20.396	72.471	25.934	NORMAL
27	19.908	71.207	23.455	19.146	69.883	24.245	NORMAL
26	19.247	68.569	22.684	18.995	67.295	24.152	NORMAL
25	19.747	65.932	23.274	19.734	64.706	25.092	NORMAL
24	21.227	63.295	25.018	21.175	62.118	26.924	NORMAL
23	23.505	60.657	27.703	23.149	59.530	29.434	NORMAL
22	26.398	58.020	31.112	25.512	56.942	32.439	NORMAL
21	29.722	55.383	35.031	28.138	54.353	35.776	NORMAL
20	33.201	52.746	39.248	30.914	51.765	39.307	NORMAL
19	36.961	50.108	43.562	33.735	49.177	42.894	NORMAL
18	40.551	47.471	47.793	36.514	46.589	46.428	NORMAL
17	43.943	44.834	51.791	39.180	44.000	49.818	NORMAL
16	47.032	42.197	55.432	41.678	41.412	52.994	NORMAL
15	49.730	39.559	58.612	43.962	38.824	55.898	NORMAL
14	51.965	36.922	61.245	45.986	36.236	58.474	NORMAL
13	53.669	34.285	63.255	47.703	33.647	60.654	NORMAL
12	54.777	31.647	64.560	49.038	31.059	62.352	NORMAL
11	55.214	29.010	65.075	49.899	28.471	63.447	NORMAL
10	54.897	26.373	64.702	50.170	25.883	63.792	NORMAL
9	53.739	23.736	63.336	49.715	23.294	63.213	NORMAL
8	51.654	21.098	60.879	48.395	20.706	61.534	NORMAL
7	48.573	18.461	57.248	46.081	18.118	58.592	NORMAL
6	44.454	15.824	52.393	42.676	15.530	54.263	NORMAL
5	39.295	13.186	46.312	38.136	12.941	48.491	NORMAL
4	33.150	10.549	39.071	32.487	10.353	41.308	NORMAL
3	26.159	7.912	30.830	25.853	7.765	32.872	NORMAL
2	18.592	5.275	21.913	18.504	5.177	23.528	NORMAL
1	10.732	2.637	12.648	10.728	2.588	13.625	NORMAL
Σ	2074.110	2444.536	2444.536	1922.546	2444.536	2444.536	GENEL

Vt=W.A(t)/Ra(t)> 0,10. Ao.I.W 2444.54 , 2444.54 > 2444.54
X Deprem kontrol: 1.00 x 2444.536 = 2444.536 > 2074.110 >>> 2444.536
Y Deprem kontrol: 1.00 x 2444.536 = 2444.536 > 1922.546 >>> 2444.536

KİRİŞ VE KOLON KAPASİTELERİNE GÖRE YAPI GÖÇME YÜKÜ
KOLON TABAN KAPASİTE MOMENTLERİ TOPLAMI : Mrx=291116.34 (tm) Mry=267743.59 (tm)
KOLONLARA BAĞLI KİRİŞ KAPASİTE MOMENTLERİ TOPLAMI : Mrx=32186.02 (tm) Mry=32693.13 (tm)
∑Mc<∑Mb > Mb=Mc KİRİŞ KAPASİTE MOMENTLERİ TOPLAMI : Mrx=32017.61 (tm) Mry=32369.75 (tm)
X YÖNÜ GÖÇME KAPASİTESİ : Px=2444.54 x (291116.34 + 32017.61) / 199305.62 = 3963.32 (t)
Y YÖNÜ GÖÇME KAPASİTESİ : Py=2444.54 x (267743.59 + 32369.75) / 199211.73 = 3682.7 (t)

Kat no	X YÖNÜ Kolon ∑Mc	X YÖNÜ Kiriş (Mci ≥ Mbi) ∑Mbi	X YÖNÜ Kapasite Vr	Y YÖNÜ Kolon ∑Mc	Y YÖNÜ Kiriş (Mci ≥ Mbi) ∑Mbi	Y YÖNÜ Kapasite Vr
40	248205.09	728.60	76596.53	231497.56	688.48	71441.86
39	249991.83	1517.44	50354.57	233029.20	1466.02	46907.05
38	251734.59	2302.98	37189.15	234539.83	2249.55	34598.59
37	253440.70	3091.08	29295.25	236007.77	3038.67	27215.97
36	255110.63	3881.84	24036.66	237441.58	3832.46	22297.80
35	256747.16	4674.06	20281.54	238839.73	4627.70	18786.34
34	258345.55	5467.67	17466.17	240205.22	5425.34	16155.98
33	259907.25	6262.70	15279.79	241543.94	6225.36	14116.92
32	261434.58	7059.15	13527.32	242847.20	7027.75	12495.70
31	262929.94	7857.01	12121.83	244118.67	7832.47	11183.11
30	264387.33	8656.30	10955.48	245266.33	8639.51	10108.52
29	265813.38	9456.93	9984.89	246585.92	9448.83	9214.90
28	267204.75	10258.06	9171.45	247769.28	10260.43	8471.17
27	268559.81	11061.17	8466.59	248923.13	11074.28	7847.99
26	269878.09	11867.03	7908.70	250049.83	11888.79	7324.02
25	271168.00	12672.89	7420.81	251143.16	12707.05	6882.25
24	272420.09	13478.75	7008.89	252207.09	13525.21	6509.05
23	273637.00	14284.61	6661.59	253239.34	14343.57	6193.17
22	274812.06	15090.47	6369.08	254239.22	15161.83	5925.35
21	275957.09	15896.33	6123.21	255208.44	15980.08	5697.86
20	277063.19	16702.19	5916.40	256150.16	16798.34	5504.16
19	278134.91	17508.05	5742.12	257057.92	17616.60	5336.44
18	279169.50	18313.91	5594.47	257932.88	18434.86	5195.56
17	280170.03	19119.77	5468.28	258774.25	19253.12	5072.22
16	281136.41	19925.63	5359.01	259585.28	20071.38	4962.97
15	282063.47	20731.49	5262.57	260363.34	20889.63	4866.01

STA-CAD V11

FİRMA : 03-23-2005

PROJE : perdeli sistem (perdeli.ST4)

14	282951.38	21537.35	5175.54	261112.34	21707.89	4781.76
13	283801.00	22343.21	5094.97	261829.81	22526.15	4702.88
12	284616.22	23149.07	5018.38	262514.06	23344.40	4629.24
11	285387.38	23954.93	4943.36	263165.53	24162.66	4558.95
10	286134.22	24760.79	4868.24	263780.25	24980.92	4490.06
9	286886.91	25566.65	4791.73	264360.91	25799.18	4420.83
8	287618.94	26372.52	4711.81	264911.22	26617.43	4349.54
7	288238.22	27178.38	4625.74	265479.25	27439.43	4275.29
6	288821.97	27984.24	4532.59	265955.28	28261.44	4194.88
5	289365.08	28790.10	4434.42	266396.28	29083.44	4107.91
4	289871.13	29595.96	4327.74	266815.34	29905.45	4013.63
3	290335.78	30402.02	4213.35	267170.75	30727.46	3911.03
2	290753.81	31209.82	4091.64	267487.03	31549.46	3800.59
1	291116.34	32017.61	3963.32	267742.59	32369.73	3682.70

(Mci ≥ Mbi) >> ∑Mni Kiriş Plastik Mafsal Kontrolu

Rüzgar kuvvetleri (t)

Kat (dyf)	X-yönü F	X-yönü ey m	Y-yönü F	Y-yönü ex m
40	10.875	15.050	12.913	12.675
39	10.875	15.050	12.913	12.675
38	10.875	15.050	12.913	12.675
37	10.875	15.050	12.913	12.675
36	10.875	15.050	12.913	12.675
35	10.875	15.050	12.913	12.675
34	10.875	15.050	12.913	12.675
33	10.875	15.050	12.913	12.675
32	10.875	15.050	12.913	12.675
31	10.875	15.050	12.913	12.675
30	10.875	15.050	12.913	12.675
29	10.875	15.050	12.913	12.675
28	10.875	15.050	12.913	12.675
27	10.875	15.050	12.913	12.675
26	10.875	15.050	12.913	12.675
25	10.875	15.050	12.913	12.675
24	10.875	15.050	12.913	12.675
23	10.875	15.050	12.913	12.675
22	10.875	15.050	12.913	12.675
21	10.875	15.050	12.913	12.675
20	10.875	15.050	12.913	12.675
19	10.875	15.050	12.913	12.675
18	10.875	15.050	12.913	12.675
17	10.875	15.050	12.913	12.675
16	10.875	15.050	12.913	12.675
15	10.875	15.050	12.913	12.675
14	10.875	15.050	12.913	12.675
13	10.875	15.050	12.913	12.675
12	10.875	15.050	12.913	12.675
11	10.875	15.050	12.913	12.675
10	10.875	15.050	12.913	12.675
9	10.875	15.050	12.913	12.675
8	10.875	15.050	12.913	12.675
7	10.875	15.050	12.913	12.675
6	7.909	15.050	9.391	12.675
5	7.909	15.050	9.391	12.675
4	7.909	15.050	9.391	12.675
3	7.909	15.050	9.391	12.675
2	4.943	15.050	5.870	12.675
1	4.943	15.050	5.870	12.675

STAA-CAD V11

FİRMA : 03-23-2005

PROJE : perdeli sistem (perdeli.ST4)

Kat Deprem deplasmanlar:

Kat	9. yükleme		10. yükleme		11. yükleme		12. yükleme	
(dyf)	δx (m)	θx (rad)	δx (m)	θx (rad)	δy (m)	θx (rad)	δy (m)	θx (rad)
40	0.0537971	0.0010149	0.0533423	0.0001950	-0.070364	-0.000486	-0.070363	0.0004866
39	0.0521117	0.0010002	0.0516665	0.0001899	-0.068161	-0.000481	-0.068161	0.0004808
38	0.0504075	0.0009843	0.0499716	0.0001850	-0.065933	-0.000474	-0.065933	0.0004742
37	0.0486857	0.0009673	0.0482591	0.0001801	-0.063682	-0.000467	-0.063682	0.0004670
36	0.0469488	0.0009493	0.0465212	0.0001753	-0.061411	-0.000459	-0.061411	0.0004591
35	0.0451998	0.0009301	0.0447915	0.0001704	-0.059124	-0.000450	-0.059124	0.0004505
34	0.0434425	0.0009099	0.0430426	0.0001655	-0.056828	-0.000441	-0.056827	0.0004414
33	0.0416809	0.0008888	0.0412917	0.0001605	-0.054526	-0.000432	-0.054526	0.0004318
32	0.0399194	0.0008668	0.0395402	0.0001555	-0.052225	-0.000422	-0.052225	0.0004217
31	0.0381623	0.0008441	0.0377936	0.0001503	-0.049929	-0.000411	-0.049929	0.0004112
30	0.0364124	0.0008206	0.0360557	0.0001450	-0.047645	-0.000400	-0.047645	0.0004004
29	0.0346763	0.0007964	0.0343300	0.0001396	-0.045375	-0.000389	-0.045375	0.0003893
28	0.0329543	0.0007717	0.0326198	0.0001341	-0.043125	-0.000378	-0.043125	0.0003779
27	0.0312501	0.0007464	0.0309280	0.0001285	-0.040899	-0.000366	-0.040899	0.0003662
26	0.0295667	0.0007207	0.0292574	0.0001228	-0.038699	-0.000354	-0.038699	0.0003543
25	0.0279064	0.0006945	0.0276102	0.0001169	-0.036528	-0.000342	-0.036528	0.0003422
24	0.0262710	0.0006678	0.0259863	0.0001111	-0.034390	-0.000330	-0.034390	0.0003299
23	0.0246626	0.0006407	0.0243941	0.0001051	-0.032287	-0.000317	-0.032287	0.0003173
22	0.0230828	0.0006132	0.0228288	0.0000991	-0.030221	-0.000304	-0.030221	0.0003045
21	0.0215322	0.0005851	0.0212940	0.0000930	-0.028193	-0.000291	-0.028193	0.0002915
20	0.0200152	0.0005567	0.0197911	0.0000868	-0.026207	-0.000278	-0.026207	0.0002782
19	0.0185302	0.0005277	0.0183216	0.0000806	-0.024264	-0.000264	-0.024264	0.0002647
18	0.0170796	0.0004982	0.0168868	0.0000744	-0.022366	-0.000251	-0.022366	0.0002509
17	0.0156650	0.0004684	0.0154882	0.0000681	-0.020516	-0.000237	-0.020516	0.0002368
16	0.0142880	0.0004380	0.0141275	0.0000619	-0.018715	-0.000222	-0.018715	0.0002225
15	0.0129505	0.0004071	0.0128062	0.0000556	-0.016966	-0.000208	-0.016966	0.0002079
14	0.0116544	0.0003759	0.0115265	0.0000494	-0.015272	-0.000193	-0.015272	0.0001931
13	0.0104019	0.0003443	0.0102903	0.0000433	-0.013635	-0.000178	-0.013635	0.0001780
12	0.0091956	0.0003124	0.0091008	0.0000373	-0.012060	-0.000162	-0.012060	0.0001627
11	0.0080382	0.0002804	0.0079582	0.0000314	-0.010548	-0.000147	-0.010548	0.0001472
10	0.0069320	0.0002484	0.0068682	0.0000258	-0.009105	-0.000131	-0.009105	0.0001317
9	0.0058826	0.0002166	0.0058231	0.0000205	-0.007734	-0.000116	-0.007734	0.0001160
8	0.0048942	0.0001852	0.0048569	0.0000155	-0.006442	-0.000100	-0.006442	0.0001004
7	0.0039696	0.0001546	0.0039442	0.0000111	-0.005243	-0.000085	-0.005243	0.0000849
6	0.0031154	0.0001250	0.0031003	0.0000072	-0.004115	-0.000069	-0.004115	0.0000697
5	0.0023381	0.0000966	0.0023312	0.0000040	-0.003095	-0.000055	-0.003095	0.0000550
4	0.0016456	0.0000705	0.0016447	0.0000016	-0.002185	-0.000040	-0.002185	0.0000408
3	0.0010477	0.0000467	0.0010501	0.0000001	-0.001395	-0.000027	-0.001395	0.0000277
2	0.0005575	0.0000261	0.0005608	-0.000000	-0.000745	-0.000015	-0.000745	0.0000159
1	0.0001944	0.0000095	0.0001966	-0.000000	-0.000260	-0.000006	-0.000260	0.0000060

Deprem yapı salınımı: x= 0.00041 y= 0.00054

STAAD V11

FİRMA :	03-23-2005
PROJE : perdeli sistem	(perdeli.ST4)

DEPREM PERDELERİ TABAN MOMENT KONTROLÜ

Kat deprem momenti (tm)

Kat	H (m)	Fx	Fx . H	Fy	Fy . H
40	130.00	219.67	28557.32	224.66	29206.24
39	126.75	189.51	24020.88	192.77	24423.88
38	123.50	161.65	19951.62	163.22	20157.76
37	120.25	137.24	16503.39	137.53	16538.05
36	117.00	115.90	13560.47	115.05	13461.10
35	113.75	97.03	11037.19	95.32	10842.10
34	110.50	80.43	8887.97	78.15	8636.11
33	107.25	66.04	7082.74	63.53	6813.26
32	104.00	53.82	5596.56	51.40	5346.06
31	100.75	43.75	4407.60	41.73	4204.10
30	97.50	35.73	3483.10	34.38	3352.31
29	94.25	29.84	2812.29	28.19	2751.49
28	91.00	25.78	2345.99	25.93	2360.01
27	87.75	23.45	2058.14	24.34	2136.24
26	84.50	22.68	1916.82	24.15	2040.86
25	81.25	23.27	1891.02	25.09	2038.77
24	78.00	25.02	1951.40	26.92	2100.05
23	74.75	27.70	2070.78	29.43	2200.17
22	71.50	31.11	2224.52	32.44	2319.36
21	68.25	35.03	2390.87	35.78	2441.85
20	65.00	39.25	2551.11	39.31	2554.96
19	61.75	43.56	2689.92	42.89	2648.73
18	58.50	47.79	2795.88	46.42	2716.03
17	55.25	51.79	2861.46	49.82	2752.44
16	52.00	55.42	2882.44	52.93	2755.69
15	48.75	58.61	2857.32	55.90	2725.03
14	45.50	61.25	2786.66	58.47	2660.55
13	42.25	63.25	2672.51	60.65	2562.64
12	39.00	64.56	2517.85	62.35	2431.72
11	35.75	65.08	2326.44	63.45	2268.24
10	32.50	64.70	2102.80	63.79	2073.23
9	29.25	63.34	1852.58	63.21	1848.99
8	26.00	60.88	1582.86	61.53	1599.89
7	22.75	57.25	1302.40	58.59	1332.97
6	19.50	52.39	1021.67	54.26	1058.13
5	16.25	46.31	752.58	48.49	787.97
4	13.00	39.07	507.92	41.31	537.00
3	9.75	30.82	300.60	32.87	320.50
2	6.50	21.91	142.43	23.53	152.93
1	3.25	12.65	41.11	13.63	44.31

Mdx= 199305.62 Mdy= 199211.73

Perde taban momenti (tm)
M : Perde ve Panel deprem momenti
∑Mk : Perdelerde; bağlı olduğu kirişlerin deprem momentlerinin toplamı
Panellerde ise; başlık kolonlarından oluşan deprem momentlerinin toplamıdır.

Perde	Mx	∑Mxk =	∑Mxr	My	∑Myk =	∑Myr
P107	320.24	0.00	320.24	11.03	0.00	11.03
P108	320.24	0.00	320.24	12.28	0.00	12.28
P109	576.85	0.00	576.85	12.53	397.31	409.84
P110	1214.26	0.00	1214.26	15.75	250.13	265.87
P111	1214.27	0.00	1214.27	23.38	352.27	375.65
P112	576.87	0.00	576.87	25.61	1085.94	1111.75
P113	600.41	0.00	600.41	12.36	0.00	12.36
P114	627.06	0.00	627.06	12.36	0.00	12.36
P115	3355.78	0.00	3355.78	20.93	173.06	193.99
P116	219.75	0.00	219.75	7.64	0.00	7.64
P117	221.08	0.00	221.08	7.90	0.00	7.90
P118	64.25	0.00	64.25	5.78	0.00	5.78
P119	64.25	0.00	64.25	5.98	0.00	5.98
P120	221.08	0.00	221.08	9.13	0.00	9.13
P121	219.76	0.00	219.76	10.07	0.00	10.07
P122	3355.73	0.00	3355.73	39.51	1197.36	1236.87
P123	908.84	0.00	908.84	12.62	230.97	243.60
P124	782.79	0.00	782.79	10.25	190.31	200.56
P125	782.79	0.00	782.79	16.31	302.20	318.51
P126	908.82	0.00	908.82	26.28	858.72	885.00
P135	18.46	1237.19	1255.65	195.53	0.00	195.53
P136	15.17	274.07	289.24	658.63	0.00	658.63
P137	13.40	0.00	13.40	727.55	0.00	727.55
P139	7.71	0.00	7.71	296.37	0.00	296.37
P140	10.06	0.00	10.06	1038.36	0.00	1038.36
P141	3.57	0.00	3.57	119.27	0.00	119.27
P142	7.04	-120.95	-113.91	973.35	0.00	973.35
P143	3.98	0.00	3.98	151.99	0.00	151.99
P144	7.74	0.00	7.74	343.25	0.00	343.25
P145	41.86	1987.63	2029.49	6824.94	0.00	6824.94
P146	6.80	-345.74	-338.94	1052.56	0.00	1052.56
P147	7.74	0.00	7.74	362.90	0.00	362.90
P148	3.98	0.00	3.98	167.65	0.00	167.65
P149	7.71	0.00	7.71	345.75	0.00	345.75
P150	10.06	0.00	10.06	1191.62	0.00	1191.62
P151	3.57	0.00	3.57	139.79	0.00	139.79

STAA-CAD V11

FİRMA : | 03-23-2005

PROJE : perdeli sistem (perdeli.ST4)

Perde taban momenti (tm)
M : Perde ve Panel deprem momenti
∑Mk : Perdelerde; bağlı olduğu kirişlerin deprem momentlerinin toplamı
Panellerde ise; başlık kolonlarından oluşan deprem momentlerinin toplamıdır.

Perde	Mx	∑Mxk =	∑Mxr	My	∑Myk =	∑Myr
P152	7.04	-120.97	-113.93	1094.77	0.00	1094.77
P153	18.46	1337.21	1355.67	247.70	0.00	247.70
P154	15.17	274.04	289.21	870.19	0.00	870.19
P155	13.40	0.00	13.40	995.64	0.00	995.64
P161	200.88	0.00	200.88	8.06	0.00	8.06
P162	199.28	0.00	199.28	8.40	0.00	8.40
P163	200.88	0.00	200.88	9.32	0.00	9.32
TOPLAM	17379.14		22001.61	18121.51		23159.78

X yönü oranı =22001.61 / 199305.62 = 0.11
Y yönü oranı =23159.78 / 199211.73 = 0.12

YÜKSEK SÜNEKLİ YAPILARDA; R=7 olmalıdır.
NORMAL SÜNEKLİ YAPILARDA; R=4 olmalıdır.

Perde taban kesme kuvveti oranı :
X yönü Vx =1743.91 / 2444.54 = 0.71
Y yönü Vx =1822.66 / 2444.54 = 0.75

DEPREMDE YAPI DÜZENSİZLİKLERİNİN KONTROLU

A1,B2 düzensizliklerinin kontrolu
max(di/hi)=0.0035, 0.02/R =.0029
1. kat X üst = -.0001944 + -.0000095 x (.0 - 11.16=-.0000879 (S101)
1. kat X alt = -.0001944 + -.0000095 x (25.25 - 11.16)=-.00033 (S142)
2. kat X üst = -.0005575 + -.0000261 x (.0 - 11.16) - -.0000879 = -.0001789 (S209)
2. kat X alt = -.0005575 + -.0000261 x (25.25 - 11.16) - -.00033 = -.0005973 (S214)

X YÖNÜ (+%5)

Kat	ΔX üst(m)	ΔX alt(m)	ΔX ort	mbi	nki	ΔX/h	θi	kat tipi
40	0.0015209	0.0018947	0.0017078	1.11	0.00	0.00058	0.00365	Normal kat
39	0.0015266	0.0019300	0.0017283	1.12	1.01	0.00059	0.00397	Normal kat
38	0.0015325	0.0019625	0.0017475	1.12	1.01	0.00060	0.00432	Normal kat
37	0.0015353	0.0019933	0.0017643	1.13	1.01	0.00061	0.00469	Normal kat
36	0.0015354	0.0020206	0.0017780	1.14	1.01	0.00062	0.00507	Normal kat
35	0.0015323	0.0020434	0.0017879	1.14	1.01	0.00063	0.00548	Normal kat
34	0.0015260	0.0020612	0.0017936	1.15	1.00	0.00063	0.00589	Normal kat
33	0.0015162	0.0020735	0.0017949	1.16	1.00	0.00064	0.00632	Normal kat
32	0.0015029	0.0020804	0.0017916	1.16	1.00	0.00064	0.00676	Normal kat
31	0.0014866	0.0020824	0.0017845	1.17	1.00	0.00064	0.00720	Normal kat
30	0.0014676	0.0020797	0.0017737	1.17	0.99	0.00064	0.00764	Normal kat
29	0.0014461	0.0020730	0.0017596	1.18	0.99	0.00064	0.00807	Normal kat
28	0.0014222	0.0020626	0.0017424	1.18	0.99	0.00063	0.00848	Normal kat
27	0.0013960	0.0020488	0.0017224	1.19	0.99	0.00063	0.00886	Normal kat
26	0.0013675	0.0020324	0.0017001	1.20	0.99	0.00063	0.00920	Normal kat
25	0.0013379	0.0020137	0.0016758	1.20	0.99	0.00062	0.00951	Normal kat
24	0.0013080	0.0019930	0.0016495	1.21	0.98	0.00061	0.00976	Normal kat
23	0.0012724	0.0019707	0.0016216	1.22	0.98	0.00061	0.00995	Normal kat
22	0.0012371	0.0019470	0.0015921	1.22	0.98	0.00060	0.01009	Normal kat
21	0.0012003	0.0019220	0.0015612	1.23	0.98	0.00059	0.01016	Normal kat
20	0.0011620	0.0018958	0.0015289	1.24	0.98	0.00058	0.01017	Normal kat
19	0.0011221	0.0018683	0.0014952	1.25	0.98	0.00057	0.01012	Normal kat
18	0.0010807	0.0018392	0.0014599	1.26	0.98	0.00057	0.01002	Normal kat
17	0.0010378	0.0018088	0.0014233	1.27	0.97	0.00056	0.00987	Normal kat
16	0.0009933	0.0017753	0.0013843	1.28	0.97	0.00055	0.00967	Normal kat
15	0.0009473	0.0017397	0.0013435	1.29	0.97	0.00054	0.00943	Normal kat
14	0.0008998	0.0017010	0.0013004	1.31	0.97	0.00052	0.00916	Normal kat
13	0.0008508	0.0016585	0.0012546	1.32	0.96	0.00051	0.00885	Normal kat
12	0.0008002	0.0016115	0.0012059	1.34	0.96	0.00050	0.00852	Normal kat
11	0.0007482	0.0015592	0.0011537	1.35	0.96	0.00048	0.00816	Normal kat
10	0.0006946	0.0015006	0.0010976	1.37	0.95	0.00046	0.00777	Normal kat
9	0.0006394	0.0014345	0.0010370	1.38	0.94	0.00044	0.00735	Normal kat
8	0.0005825	0.0013596	0.0009711	1.40	0.94	0.00042	0.00690	Normal kat
7	0.0005238	0.0012744	0.0008991	1.42	0.92	0.00039	0.00641	Normal kat
6	0.0004629	0.0011770	0.0008200	1.44	0.91	0.00036	0.00588	Normal kat
5	0.0003993	0.0010653	0.0007323	1.45	0.89	0.00033	0.00530	Normal kat
4	0.0003321	0.0009360	0.0006341	1.48	0.87	0.00029	0.00464	Normal kat
3	0.0002597	0.0007634	0.0005215	1.50	0.82	0.00024	0.00387	Normal kat
2	0.0001789	0.0005973	0.0003881	1.54	0.74	0.00018	0.00293	Normal kat
1	0.0000879	0.0002300	0.0002089	1.59	0.54	0.00010	0.00161	Normal kat

STA-CAD V11

FİRMA : 03-23-2005

PROJE : perdeli sistem (perdeli.ST4)

X YÖNÜ (-%5)

Kat	ΔX üst(m)	ΔX alt(m)	ΔX ort	nbi	nki	ΔX/h	θi	kat tipi
40	0.0016197	0.0017472	0.0016834	1.04	0.00	0.00054	0.00360	Normal kat
39	0.0016392	0.0017654	0.0017024	1.04	1.01	0.00054	0.00391	Normal kat
38	0.0016582	0.0017818	0.0017200	1.04	1.01	0.00055	0.00425	Normal kat
37	0.0016738	0.0017965	0.0017351	1.04	1.01	0.00055	0.00461	Normal kat
36	0.0016857	0.0018086	0.0017471	1.04	1.01	0.00056	0.00498	Normal kat
35	0.0016933	0.0018173	0.0017553	1.04	1.00	0.00056	0.00538	Normal kat
34	0.0016964	0.0018224	0.0017594	1.04	1.00	0.00056	0.00578	Normal kat
33	0.0016949	0.0018232	0.0017591	1.04	1.00	0.00056	0.00620	Normal kat
32	0.0016889	0.0018200	0.0017545	1.04	1.00	0.00056	0.00662	Normal kat
31	0.0016789	0.0018130	0.0017460	1.04	1.00	0.00056	0.00705	Normal kat
30	0.0016654	0.0018024	0.0017339	1.04	0.99	0.00055	0.00747	Normal kat
29	0.0016487	0.0017885	0.0017186	1.04	0.99	0.00055	0.00788	Normal kat
28	0.0016291	0.0017716	0.0017003	1.04	0.99	0.00055	0.00827	Normal kat
27	0.0016068	0.0017518	0.0016792	1.04	0.99	0.00054	0.00864	Normal kat
26	0.0015823	0.0017296	0.0016560	1.04	0.99	0.00053	0.00897	Normal kat
25	0.0015560	0.0017052	0.0016306	1.05	0.98	0.00052	0.00925	Normal kat
24	0.0015278	0.0016790	0.0016034	1.05	0.98	0.00052	0.00949	Normal kat
23	0.0014980	0.0016510	0.0015745	1.05	0.98	0.00051	0.00967	Normal kat
22	0.0014668	0.0016213	0.0015440	1.05	0.98	0.00050	0.00978	Normal kat
21	0.0014342	0.0015901	0.0015122	1.05	0.98	0.00049	0.00984	Normal kat
20	0.0014004	0.0015574	0.0014789	1.05	0.98	0.00048	0.00984	Normal kat
19	0.0013653	0.0015232	0.0014443	1.05	0.98	0.00047	0.00978	Normal kat
18	0.0013288	0.0014873	0.0014081	1.06	0.97	0.00046	0.00966	Normal kat
17	0.0012909	0.0014496	0.0013703	1.06	0.97	0.00045	0.00950	Normal kat
16	0.0012515	0.0014098	0.0013307	1.06	0.97	0.00043	0.00930	Normal kat
15	0.0012105	0.0013678	0.0012892	1.06	0.97	0.00042	0.00905	Normal kat
14	0.0011678	0.0013232	0.0012455	1.06	0.97	0.00041	0.00877	Normal kat
13	0.0011232	0.0012757	0.0011994	1.06	0.96	0.00039	0.00846	Normal kat
12	0.0010764	0.0012247	0.0011506	1.06	0.96	0.00038	0.00813	Normal kat
11	0.0010272	0.0011699	0.0010986	1.06	0.95	0.00036	0.00777	Normal kat
10	0.0009757	0.0011107	0.0010432	1.06	0.95	0.00034	0.00738	Normal kat
9	0.0009218	0.0010463	0.0009836	1.06	0.94	0.00032	0.00697	Normal kat
8	0.0008629	0.0009761	0.0009195	1.06	0.93	0.00030	0.00653	Normal kat
7	0.0008006	0.0008991	0.0008498	1.06	0.92	0.00028	0.00606	Normal kat
6	0.0007324	0.0008143	0.0007735	1.05	0.91	0.00025	0.00555	Normal kat
5	0.0006598	0.0007206	0.0006902	1.04	0.89	0.00022	0.00499	Normal kat
4	0.0005774	0.0006163	0.0005969	1.03	0.86	0.00019	0.00436	Normal kat
3	0.0004819	0.0004987	0.0004903	1.02	0.82	0.00015	0.00363	Normal kat
2	0.0003650	0.0003632	0.0003641	1.00	0.74	0.00011	0.00274	Normal kat
1	0.0002025	0.0001891	0.0001958	1.03	0.54	0.00006	0.00151	Normal kat

Y YÖNÜ (+%5)

Kat	ΔY sol(m)	ΔY sağ(m)	ΔY ort	nbi	nki	ΔY/h	θi	kat tipi
40	0.0021149	0.0022902	0.0022026	1.04	0.00	0.00070	0.00461	Normal kat
39	0.0021291	0.0023264	0.0022278	1.04	1.01	0.00072	0.00502	Normal kat
38	0.0021423	0.0023604	0.0022514	1.05	1.01	0.00072	0.00547	Normal kat
37	0.0021520	0.0023905	0.0022712	1.05	1.01	0.00074	0.00595	Normal kat
36	0.0021578	0.0024152	0.0022865	1.06	1.01	0.00074	0.00645	Normal kat
35	0.0021595	0.0024341	0.0022968	1.06	1.00	0.00075	0.00698	Normal kat
34	0.0021567	0.0024466	0.0023017	1.06	1.00	0.00075	0.00752	Normal kat
33	0.0021495	0.0024528	0.0023011	1.07	1.00	0.00075	0.00809	Normal kat
32	0.0021378	0.0024530	0.0022954	1.07	1.00	0.00075	0.00866	Normal kat
31	0.0021219	0.0024476	0.0022847	1.07	1.00	0.00075	0.00923	Normal kat
30	0.0021020	0.0024370	0.0022695	1.07	0.99	0.00075	0.00980	Normal kat
29	0.0020783	0.0024216	0.0022499	1.08	0.99	0.00075	0.01034	Normal kat
28	0.0020511	0.0024020	0.0022265	1.08	0.99	0.00074	0.01086	Normal kat
27	0.0020210	0.0023790	0.0022000	1.08	0.99	0.00073	0.01134	Normal kat
26	0.0019879	0.0023528	0.0021704	1.08	0.99	0.00072	0.01176	Normal kat
25	0.0019523	0.0023239	0.0021381	1.09	0.99	0.00072	0.01212	Normal kat
24	0.0019141	0.0022925	0.0021033	1.09	0.98	0.00071	0.01242	Normal kat
23	0.0018737	0.0022590	0.0020663	1.09	0.98	0.00070	0.01264	Normal kat
22	0.0018310	0.0022235	0.0020273	1.10	0.98	0.00068	0.01279	Normal kat
21	0.0017862	0.0021862	0.0019862	1.10	0.98	0.00067	0.01287	Normal kat
20	0.0017393	0.0021469	0.0019431	1.10	0.98	0.00066	0.01287	Normal kat
19	0.0016901	0.0021056	0.0018979	1.11	0.98	0.00065	0.01280	Normal kat
18	0.0016387	0.0020623	0.0018505	1.11	0.98	0.00063	0.01267	Normal kat
17	0.0015850	0.0020167	0.0018009	1.12	0.97	0.00062	0.01247	Normal kat
16	0.0015290	0.0019686	0.0017488	1.12	0.97	0.00061	0.01222	Normal kat
15	0.0014706	0.0019178	0.0016942	1.13	0.97	0.00059	0.01191	Normal kat
14	0.0014094	0.0018637	0.0016366	1.14	0.97	0.00057	0.01156	Normal kat
13	0.0013455	0.0018061	0.0015758	1.15	0.96	0.00056	0.01117	Normal kat
12	0.0012786	0.0017443	0.0015115	1.15	0.96	0.00054	0.01073	Normal kat
11	0.0012086	0.0016779	0.0014432	1.16	0.95	0.00052	0.01026	Normal kat
10	0.0011350	0.0016060	0.0013705	1.17	0.95	0.00049	0.00976	Normal kat
9	0.0010575	0.0015276	0.0012926	1.18	0.94	0.00047	0.00921	Normal kat
8	0.0009758	0.0014418	0.0012088	1.19	0.94	0.00044	0.00863	Normal kat
7	0.0008892	0.0013472	0.0011182	1.20	0.93	0.00041	0.00801	Normal kat
6	0.0007970	0.0012419	0.0010195	1.22	0.91	0.00038	0.00734	Normal kat
5	0.0006980	0.0011234	0.0009107	1.23	0.89	0.00035	0.00661	Normal kat
4	0.0005907	0.0008881	0.0007894	1.25	0.87	0.00030	0.00578	Normal kat
3	0.0004720	0.0008288	0.0006504	1.27	0.82	0.00026	0.00483	Normal kat
2	0.0003371	0.0006231	0.0004851	1.31	0.75	0.00019	0.00366	Normal kat
1	0.0001701	0.0003501	0.0002601	1.35	0.58	0.00011	0.00200	Normal kat

STAA-PAD V11

FİRMA :	03-23-2005
PROJE : perdeli sistem	(perdeli.ST4)

Y YÖNÜ (-45)

Kat	ΔY dsol(m)	ΔY dsağ(m)	ΔY ort	nbi	nki	ΔY/h	θi	kat tipi
40	0.0022901	0.0021150	0.0022025	1.04	0.00	0.00070	0.00461	Normal kat
39	0.0023262	0.0021292	0.0022277	1.04	1.01	0.00072	0.00502	Normal kat
38	0.0023603	0.0021424	0.0022514	1.05	1.01	0.00073	0.00547	Normal kat
37	0.0023904	0.0021520	0.0022712	1.05	1.01	0.00074	0.00595	Normal kat
36	0.0024151	0.0021579	0.0022865	1.06	1.01	0.00074	0.00645	Normal kat
35	0.0024340	0.0021596	0.0022968	1.06	1.00	0.00075	0.00698	Normal kat
34	0.0024465	0.0021568	0.0023016	1.06	1.00	0.00075	0.00752	Normal kat
33	0.0024527	0.0021495	0.0023011	1.07	1.00	0.00075	0.00809	Normal kat
32	0.0024529	0.0021378	0.0022954	1.07	1.00	0.00075	0.00866	Normal kat
31	0.0024475	0.0021219	0.0022847	1.07	1.00	0.00075	0.00923	Normal kat
30	0.0024369	0.0021020	0.0022694	1.07	0.99	0.00075	0.00980	Normal kat
29	0.0024215	0.0020783	0.0022499	1.08	0.99	0.00075	0.01034	Normal kat
28	0.0024019	0.0020511	0.0022265	1.08	0.99	0.00074	0.01086	Normal kat
27	0.0023789	0.0020210	0.0021999	1.08	0.99	0.00073	0.01134	Normal kat
26	0.0023527	0.0019880	0.0021703	1.08	0.99	0.00072	0.01176	Normal kat
25	0.0023238	0.0019524	0.0021381	1.09	0.99	0.00072	0.01212	Normal kat
24	0.0022924	0.0019142	0.0021033	1.09	0.98	0.00071	0.01242	Normal kat
23	0.0022586	0.0018738	0.0020663	1.09	0.98	0.00070	0.01264	Normal kat
22	0.0022234	0.0018311	0.0020272	1.10	0.98	0.00068	0.01279	Normal kat
21	0.0021860	0.0017864	0.0019862	1.10	0.98	0.00067	0.01287	Normal kat
20	0.0021468	0.0017394	0.0019431	1.10	0.98	0.00066	0.01287	Normal kat
19	0.0021055	0.0016902	0.0018979	1.11	0.98	0.00065	0.01280	Normal kat
18	0.0020621	0.0016389	0.0018505	1.11	0.98	0.00063	0.01267	Normal kat
17	0.0020165	0.0015852	0.0018009	1.12	0.97	0.00062	0.01247	Normal kat
16	0.0019685	0.0015292	0.0017488	1.12	0.97	0.00061	0.01222	Normal kat
15	0.0019176	0.0014707	0.0016942	1.13	0.97	0.00059	0.01191	Normal kat
14	0.0018635	0.0014096	0.0016366	1.14	0.97	0.00057	0.01156	Normal kat
13	0.0018059	0.0013457	0.0015758	1.15	0.96	0.00056	0.01117	Normal kat
12	0.0017441	0.0012788	0.0015115	1.15	0.96	0.00054	0.01073	Normal kat
11	0.0016777	0.0012088	0.0014432	1.16	0.95	0.00052	0.01026	Normal kat
10	0.0016058	0.0011352	0.0013705	1.17	0.95	0.00049	0.00976	Normal kat
9	0.0015275	0.0010577	0.0012926	1.18	0.94	0.00047	0.00921	Normal kat
8	0.0014417	0.0009760	0.0012088	1.19	0.94	0.00044	0.00863	Normal kat
7	0.0013470	0.0008894	0.0011182	1.20	0.93	0.00041	0.00801	Normal kat
6	0.0012417	0.0007972	0.0010195	1.22	0.91	0.00038	0.00734	Normal kat
5	0.0011232	0.0006982	0.0009107	1.23	0.89	0.00035	0.00661	Normal kat
4	0.0009880	0.0005908	0.0007894	1.25	0.87	0.00030	0.00578	Normal kat
3	0.0008287	0.0004721	0.0006504	1.27	0.82	0.00025	0.00483	Normal kat
2	0.0006330	0.0003372	0.0004851	1.30	0.75	0.00019	0.00366	Normal kat
1	0.0003501	0.0001701	0.0002601	1.35	0.54	0.00011	0.00200	Normal kat

TDY 6.3.2.1 Al burulma düzensizliği:
1.2< nbi=1.579 <2 , dinamik analizle çözülmüştür ✓
TDY 6.3.2.1 B2 düzensizliği sağlanmaktadır. ✓
TDY 6.20 koşulu sağlanmaktadır. .0008 < .0029 ✓
TDY 6.21 koşulu sağlanmaktadır. max θi=.013 < 0.12 ✓

STAA-CAD V11

FİRMA : 03-23-2005

PROJE : perdeli sistem (perdeli.ST4)

B1-Düşey doğrultudaki düzensizliklerinin kontrolu

Kat	Aw	Agx	Agy	∑Rex	∑Rey	ncix	nciy	AÇIKLAMA
40	17.24	47.16	37.77	64.40	55.01	1.00	1.00	Üst kat ✓
39	17.24	47.16	37.77	64.40	55.01	1.00	1.00	Düzenli ✓
38	17.24	47.16	37.77	64.40	55.01	1.00	1.00	Düzenli ✓
37	17.24	47.16	37.77	64.40	55.01	1.00	1.00	Düzenli ✓
36	17.24	47.16	37.77	64.40	55.01	1.00	1.00	Düzenli ✓
35	17.24	47.16	37.77	64.40	55.01	1.00	1.00	Düzenli ✓
34	17.24	47.16	37.77	64.40	55.01	1.00	1.00	Düzenli ✓
33	17.24	47.16	37.77	64.40	55.01	1.00	1.00	Düzenli ✓
32	17.24	47.16	37.77	64.40	55.01	1.00	1.00	Düzenli ✓
31	17.24	47.16	37.77	64.40	55.01	1.00	1.00	Düzenli ✓
30	17.24	47.16	37.77	64.40	55.01	1.00	1.00	Düzenli ✓
29	17.24	47.16	37.77	64.40	55.01	1.00	1.00	Düzenli ✓
28	17.24	47.16	37.77	64.40	55.01	1.00	1.00	Düzenli ✓
27	17.24	47.16	37.77	64.40	55.01	1.00	1.00	Düzenli ✓
26	17.24	47.16	37.77	64.40	55.01	1.00	1.00	Düzenli ✓
25	17.24	47.16	37.77	64.40	55.01	1.00	1.00	Düzenli ✓
24	17.24	47.16	37.77	64.40	55.01	1.00	1.00	Düzenli ✓
23	17.24	47.16	37.77	64.40	55.01	1.00	1.00	Düzenli ✓
22	17.24	47.16	37.77	64.40	55.01	1.00	1.00	Düzenli ✓
21	17.24	47.16	37.77	64.40	55.01	1.00	1.00	Düzenli ✓
20	17.24	47.16	37.77	64.40	55.01	1.00	1.00	Düzenli ✓
19	17.24	47.16	37.77	64.40	55.01	1.00	1.00	Düzenli ✓
18	17.24	47.16	37.77	64.40	55.01	1.00	1.00	Düzenli ✓
17	17.24	47.16	37.77	64.40	55.01	1.00	1.00	Düzenli ✓
16	17.24	47.16	37.77	64.40	55.01	1.00	1.00	Düzenli ✓
15	17.24	47.16	37.77	64.40	55.01	1.00	1.00	Düzenli ✓
14	17.24	47.16	37.77	64.40	55.01	1.00	1.00	Düzenli ✓
13	17.24	47.16	37.77	64.40	55.01	1.00	1.00	Düzenli ✓
12	17.24	47.16	37.77	64.40	55.01	1.00	1.00	Düzenli ✓
11	17.24	47.16	37.77	64.40	55.01	1.00	1.00	Düzenli ✓
10	17.24	47.16	37.77	64.40	55.01	1.00	1.00	Düzenli ✓
9	17.24	47.16	37.77	64.40	55.01	1.00	1.00	Düzenli ✓
8	17.24	47.16	37.77	64.40	55.01	1.00	1.00	Düzenli ✓
7	17.24	47.16	37.77	64.40	55.01	1.00	1.00	Düzenli ✓
6	17.24	47.16	37.77	64.40	55.01	1.00	1.00	Düzenli ✓
5	17.24	47.16	37.77	64.40	55.01	1.00	1.00	Düzenli ✓
4	17.24	47.16	37.77	64.40	55.01	1.00	1.00	Düzenli ✓
3	17.24	47.16	37.77	64.40	55.01	1.00	1.00	Düzenli ✓
2	17.24	47.16	37.77	64.40	55.01	1.00	1.00	Düzenli ✓
1	17.24	47.16	37.77	64.40	55.01	1.00	1.00	Düzenli ✓

TDY97 A4 düzensizliği :
A4 düzensizliği bulunmamıştır. ✓

STAA-CAD V11

FİRMA :	03-23-2005
PROJE : perdeli sistem	(perdeli.ST4)

MODAL ANALİZ MOD GRAFİĞİ (1000 x Dep. vektörü)

X yönü

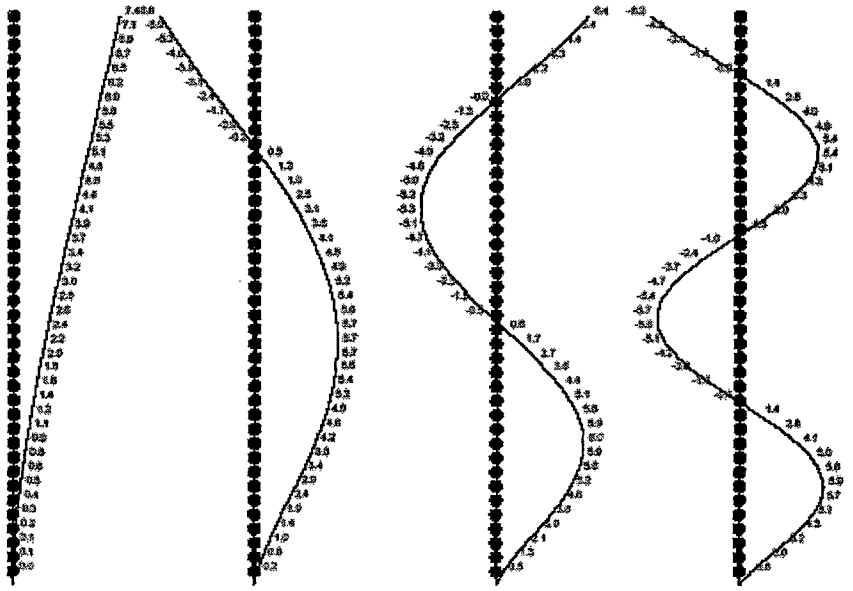

1. MOD 2. MOD 3. MOD 4. MOD

Y yönü

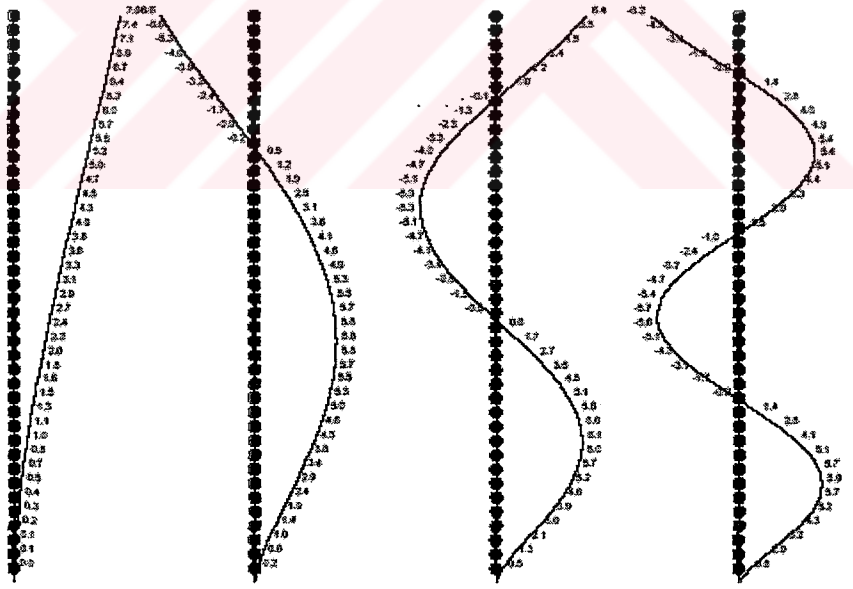

1. MOD 2. MOD 3. MOD 4. MOD

STAA-CAD V11

FİRMA : | 03-23-2005

PROJE : perdeli sistem (perdeli.ST4)

K101
Bw/D= 50/ 90 I= 4 J= 1 Tabla : B2/D2= 14/ 26cm

KOMBİNASYON	SolM (tm)	SağM (tm)	SolVd (t)	SağVd (t)
1.(G+G+G+G)	-6.96	-18.05	-5.66	-11.53
2.(Q+Q+Q+Q)	-0.62	-1.56	-0.59	-0.96
3.(o+Q+o+Q)	-0.44	-1.02	-0.52	-0.52
4.(Q+o+Q+o)	-0.18	-0.55	-0.06	-0.44
5.(Q+Q+o+Q)	-0.18	-0.57	-0.07	-0.45
6.(o+Q+Q+o)	-0.64	-1.55	-0.59	-0.96
7.(o+o+Q+Q)	-0.43	-1.01	-0.51	-0.51
Zemin itkisi	0.00	0.00	0.00	0.00
X-Deprem+%5	0.22	-1.57	-0.48	-0.48
X-Deprem-%5	0.74	-4.51	-1.35	-1.35
Y-Deprem+%5	0.52	-2.85	-0.83	-0.83
Y-Deprem-%5	-0.09	0.64	0.20	0.20
X-Rüzgar+%5	0.04	-0.26	-0.08	-0.08
X-Rüzgar-%5	0.12	-0.75	-0.22	-0.22
Y-Rüzgar+%5	0.10	-0.57	-0.17	-0.17
Y-Rüzgar-%5	-0.02	0.12	0.04	0.04

MATERIAL:E1 BS30 C8420 Fk: 0.00 5.61 cm²

BETONARME	: üstMsol	altMsol	Mac.	üstMsağ	altMsağ
Mdus. (tm)	: 0.00	0.00	(0.00m)	7.07	0.00
max M (tm)	: 0.00	-10.76	0.00	-27.77	0.00
fcd (kg/cm²)	: 0.00	200.00	0.00	200.00	0.00
As' (cm²)	: 0.00	0.00	0.00	0.00	0.00
As (cm²)	: 0.00	3.49	0.00	14.78	7.39

DONATI: 4ø14(mon.)+4ø16(göv.)+3ø20(sag üst ila.)
4ø16(düz)+ 2xø10/20/11(etriye)

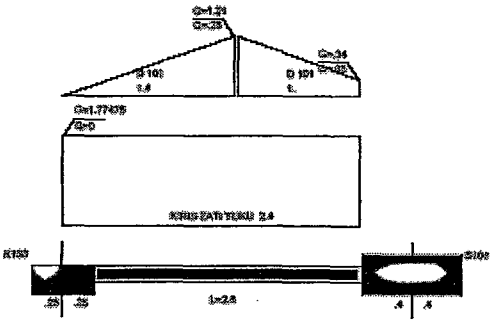

K102
Bw/D= 50/ 60 I= 1 J= 3 Tabla : B2/D2= 20/ 26cm

KOMBİNASYON	SolM (tm)	SağM (tm)	SolVd (t)	SağVd (t)
1.(G+G+G+G)	6.70	-3.77	5.30	-3.92
2.(Q+Q+Q+Q)	0.63	-0.38	0.49	-0.37
3.(o+Q+o+Q)	0.58	-0.23	0.49	-0.37
4.(Q+o+Q+o)	0.05	-0.05	0.00	0.00
5.(Q+Q+o+Q)	0.07	-0.02	0.01	0.01
6.(o+Q+Q+o)	0.69	-0.27	0.53	-0.33
7.(o+o+Q+Q)	0.50	-0.47	0.42	-0.42
Zemin itkisi	0.00	0.00	0.00	0.00
X-Deprem+%5	-0.25	-0.34	-0.14	-0.14
X-Deprem-%5	-5.10	-5.01	-2.40	-2.40
Y-Deprem+%5	-2.56	-2.52	-1.21	-1.21
Y-Deprem-%5	3.20	3.02	1.48	1.48
X-Rüzgar+%5	-0.02	-0.03	-0.01	-0.01
X-Rüzgar-%5	-0.83	-0.81	-0.39	-0.39
Y-Rüzgar+%5	-0.51	-0.50	-0.24	-0.24
Y-Rüzgar-%5	0.64	0.60	0.30	0.30

MATERIAL:E1 BS30 C8420 Fk: 4.99 3.89 cm²

BETONARME	: üstMsol	altMsol	Mac.	üstMsağ	altMsağ
Mdus. (tm)	: -3.28	0.00	(2.31m)	2.68	0.45
max M (tm)	: 12.49	0.00	1.68	-9.25	1.61
fcd (kg/cm²)	: 200.00	0.00	200.00	200.00	200.00
As' (cm²)	: 0.00	0.00	0.00	0.00	0.00
As (cm²)	: 13.22	6.61	10.57	13.22	6.61

DONATI: 4ø14(mon.)+2ø16(göv.)+2ø22(sag üst ila.)
4ø20(düz)+ 2xø10/11(etriye)

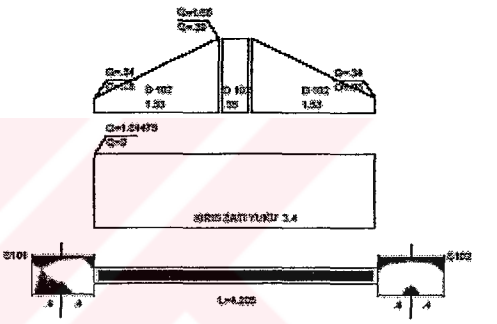

K103
Bw/D= 50/ 60 I= 2 J= 10 Tabla : B2/D2= 20/ 26cm

KOMBİNASYON	SolM (tm)	SağM (tm)	SolVd (t)	SağVd (t)
1.(G+G+G+G)	2.77	-6.70	2.91	-5.31
2.(Q+Q+Q+Q)	0.38	-0.63	0.37	-0.49
3.(o+Q+o+Q)	0.08	0.00	0.02	0.02
4.(Q+o+Q+o)	0.30	-0.63	0.25	-0.51
5.(Q+Q+o+Q)	0.28	-0.73	0.32	-0.54
6.(o+Q+Q+o)	-0.02	-0.20	-0.05	-0.05
7.(o+o+Q+Q)	0.50	-0.32	0.47	-0.39
Zemin itkisi	0.00	0.00	0.00	0.00
X-Deprem+%5	-0.24	-0.25	-0.14	-0.14
X-Deprem-%5	-5.01	-5.10	-2.40	-2.40
Y-Deprem+%5	-2.02	-3.20	-1.48	-1.48
Y-Deprem-%5	2.52	2.56	1.21	1.21
X-Rüzgar+%5	-0.02	-0.02	-0.01	-0.01
X-Rüzgar-%5	-0.81	-0.82	-0.39	-0.39
Y-Rüzgar+%5	-0.60	-0.64	-0.30	-0.30
Y-Rüzgar-%5	0.50	0.51	0.24	0.24

MATERIAL:E1 BS30 C8420 Fk: 3.95 4.93 cm²

BETONARME	: üstMsol	altMsol	Mac.	üstMsağ	altMsağ
Mdus. (tm)	: -2.67	-0.45	(1.91m)	3.28	0.00
max M (tm)	: 9.28	-1.61	1.67	-12.58	0.00
fcd (kg/cm²)	: 200.00	200.00	200.00	200.00	0.00
As' (cm²)	: 0.00	0.00	0.00	0.00	0.00
As (cm²)	: 13.22	6.61	10.57	13.22	6.61

DONATI: 4ø14(mon.)+2ø16(göv.)+3ø20(sag üst ila.)
4ø20(düz)+ 2xø10/11(etriye)

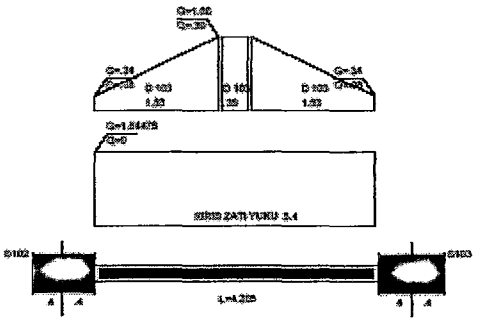

STAA-CAD V11

FİRMA : | 03-23-2005

PROJE : perdeli sistem (perdeli.ST4)

K104
Bw/D= 50/ 90 I= 18 J= 22 Tabla : B2/D2= 14/ 26cm

KOMBİNASYON	SolM (tm)	SağM (tm)	SolVd (t)	SağVd (t)
1.(G+G+G+G)	18.04	6.95	11.53	5.66
2.(Q+Q+Q+Q)	1.56	0.62	0.96	0.58
3.(o+Q+o+Q)	0.37	0.06	0.24	-0.04
4.(Q+o+Q+o)	1.19	0.56	0.62	0.62
5.(Q+Q+o+Q)	1.53	0.65	0.96	0.58
6.(o+Q+Q+o)	1.47	0.65	0.94	0.56
7.(o+o+Q+Q)	0.12	-0.05	0.02	0.02
Zemin itkisi	0.00	0.00	0.00	0.00
X-Deprem+%5	-1.57	0.23	-0.48	-0.48
X-Deprem-%5	-4.51	0.74	-1.35	-1.35
Y-Deprem+%5	-0.84	0.09	-0.20	-0.20
Y-Deprem-%5	2.85	-0.52	0.83	0.83
X-Rüzgar+%5	-0.26	0.04	-0.08	-0.08
X-Rüzgar-%5	-0.75	0.12	-0.22	-0.22
Y-Rüzgar+%5	-0.12	0.02	-0.04	-0.04
Y-Rüzgar-%5	0.57	-0.10	0.17	0.17
MATERIAL:E1	BS30	CS420 Fk:	5.61	0.00 cm²

BETONARME :	üstMsol	altMsol	Mac.	üstMsağ	altMsağ
Mdur. (tm) :	-7.07	0.00	(2.80m)	0.00	0.00
max M (tm) :	27.75	0.00	0.00	0.00	10.77
fcd (kg/cm²) :	200.00	0.00	0.00	0.00	200.00
As' (cm²) :	0.00	0.00	0.00	0.00	0.00
As (cm²) :	14.78	7.39	0.00	0.00	3.49

DONATI: 4ø14(mon.)+4ø16(göv.)
4ø16(dün)+ 2xø10/20/11(etriye)

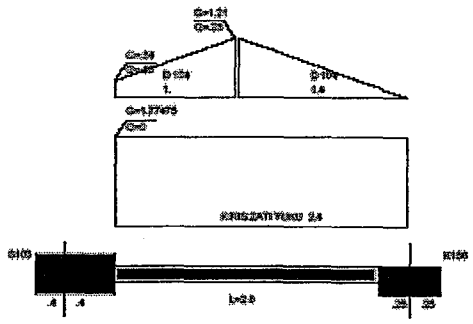

K105
Bw/D= 50/ 90 I= 25 J= 12 Tabla : B2/D2= 25/ 26cm

KOMBİNASYON	SolM (tm)	SağM (tm)	SolVd (t)	SağVd (t)
1.(G+G+G+G)	16.87	6.96	11.11	-2.83
2.(Q+Q+Q+Q)	1.77	0.62	1.12	-0.43
3.(o+Q+o+Q)	1.55	0.44	1.03	-0.52
4.(Q+o+Q+o)	0.22	0.18	0.09	0.09
5.(Q+Q+o+Q)	0.19	0.18	0.08	0.08
6.(o+Q+Q+o)	1.75	0.64	1.12	-0.43
7.(o+o+Q+Q)	1.69	0.43	1.04	-0.51
Zemin itkisi	0.00	0.00	0.00	0.00
X-Deprem+%5	-1.94	-0.23	-0.48	-0.48
X-Deprem-%5	-5.27	-0.74	-1.35	-1.35
Y-Deprem+%5	-3.27	-0.52	-0.83	-0.83
Y-Deprem-%5	0.80	0.09	0.20	0.20
X-Rüzgar+%5	-0.32	-0.04	-0.08	-0.08
X-Rüzgar-%5	-0.89	-0.12	-0.22	-0.22
Y-Rüzgar+%5	-0.65	-0.10	-0.17	-0.17
Y-Rüzgar-%5	0.16	0.02	0.04	0.04
MATERIAL:E1	BS30	CS420 Fk:	8.74	1.42 cm²

BETONARME :	üstMsol	altMsol	Mac.	üstMsağ	altMsağ
Mdur. (tm) :	-6.94	0.00	(3.75m)	0.00	0.00
max M (tm) :	26.45	0.00	12.38	0.00	10.76
fcd (kg/cm²) :	200.00	0.00	200.00	0.00	200.00
As' (cm²) :	0.00	0.00	0.00	0.00	0.00
As (cm²) :	14.78	7.39	11.82	0.00	3.49

DONATI: 4ø14(mon.)+4ø16(göv.)+3ø20(sol üst ila.)
4ø20(dün)+ 2xø10/11(etriye)

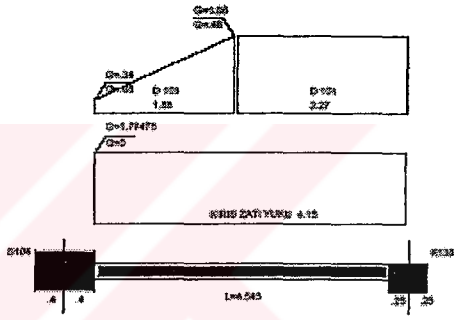

K106
Bw/D= 50/ 90 I= 42 J= 66 Tabla : B2/D2= 25/ 26cm

KOMBİNASYON	SolM (tm)	SağM (tm)	SolVd (t)	SağVd (t)
1.(G+G+G+G)	-6.95	-16.87	2.83	-11.12
2.(Q+Q+Q+Q)	-0.62	-1.77	0.43	-1.12
3.(o+Q+o+Q)	-0.06	-0.11	-0.04	-0.04
4.(Q+o+Q+o)	-0.56	-1.66	0.47	-1.08
5.(Q+Q+o+Q)	-0.65	-1.74	0.42	-1.12
6.(o+Q+Q+o)	-0.65	-1.85	0.41	-1.14
7.(o+o+Q+Q)	0.05	0.05	0.02	0.02
Zemin itkisi	0.00	0.00	0.00	0.00
X-Deprem+%5	-0.23	-1.94	-0.48	-0.48
X-Deprem-%5	-0.74	-5.27	-1.35	-1.35
Y-Deprem+%5	-0.09	-0.81	-0.20	-0.20
Y-Deprem-%5	0.52	3.27	0.83	0.83
X-Rüzgar+%5	-0.04	-0.32	-0.08	-0.08
X-Rüzgar-%5	-0.12	-0.89	-0.22	-0.22
Y-Rüzgar+%5	-0.02	-0.16	-0.04	-0.04
Y-Rüzgar-%5	0.10	0.65	0.17	0.17
MATERIAL:E1	BS30	CS420 Fk:	1.48	8.68 cm²

BETONARME :	üstMsol	altMsol	Mac.	üstMsağ	altMsağ
Mdur. (tm) :	0.00	0.00	(0.82m)	6.94	0.00
max M (tm) :	0.00	-10.77	12.50	-26.57	0.00
fcd (kg/cm²) :	0.00	200.00	200.00	200.00	0.00
As' (cm²) :	0.00	0.00	0.00	0.00	0.00
As (cm²) :	0.00	3.49	11.82	14.78	7.39

DONATI: 4ø14(mon.)+4ø16(göv.)+3ø20(sag üst ila.)
4ø20(dün)+ 2xø10/11(etriye)

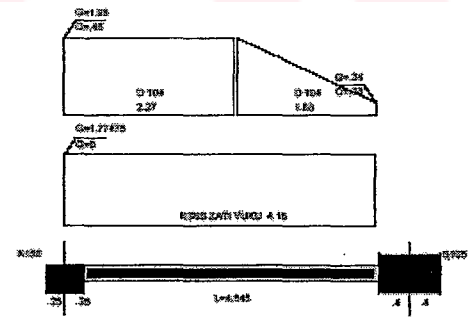

STAA-CAD V11

FİRMA : | 03-23-2005

PROJE : perdeli sistem (perdeli.ST4)

K127
Bw/D= 50/ 90 I= 339 J= 411 Tabla : B1/D1= 29/ 26cm

KOMBİNASYON	SolM (tm)	SağM (tm)	SolVd (t)	SağVd (t)
1.(G+G+G+G)	5.21	-3.13	5.95	-5.30
2.(Q+Q+Q+Q)	0.59	-0.24	0.57	-0.42
3.(o+Q+o+Q)	0.57	-0.21	0.56	-0.42
4.(Q+o+Q+o)	0.01	-0.04	-0.01	-0.01
5.(Q+Q+o+Q)	0.00	-0.04	-0.01	-0.01
6.(o+Q+Q+o)	0.57	-0.21	0.57	-0.42
7.(o+o+Q+Q)	0.59	-0.25	0.57	-0.42
Zemin itkisi	0.00	0.00	0.00	0.00
X-Deprem+%5	-9.23	-5.77	-3.30	-3.30
X-Deprem-%5	-5.37	-3.36	-1.92	-1.92
Y-Deprem+%5	4.99	3.16	1.79	1.79
Y-Deprem-%5	0.41	0.30	0.16	0.16
X-Rüzgar+%5	-1.65	-1.02	-0.59	-0.59
X-Rüzgar-%5	-1.00	-0.63	-0.36	-0.36
Y-Rüzgar+%5	1.01	0.64	0.36	0.36
Y-Rüzgar-%5	0.10	0.07	0.04	0.04
MATERIAL:E1	B330	CS420 Fk:	5.24	4.92 cm²

BETONARME :	üstMsol	altMsol	Mac.	üstMsağ	altMsağ
Mdus. (tm) :	-3.93	-0.82	(2.41m)	2.26	0.27
max M (tm) :	15.03	-4.55	5.92	-9.15	2.96
fcd (kg/cm²) :	200.00	200.00	200.00	200.00	200.00
As' (cm²) :	0.00	0.00	0.00	0.00	0.00
As (cm²) :	14.78	7.39	11.82	14.78	7.39

DONATI: 4ø14(mon.)+4ø16(göv.)+3ø20(sol üst ila.)+3ø20(sag üst ila.)
4ø20(düz)+ 2xø10/11(etriye)

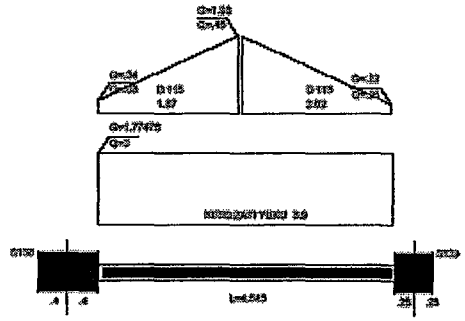

K128
Bw/D= 50/ 90 I= 568 J= 485 Tabla : B1/D1= 23/ 26cm

KOMBİNASYON	SolM (tm)	SağM (tm)	SolVd (t)	SağVd (t)
1.(G+G+G+G)	3.13	-5.20	5.30	-5.94
2.(Q+Q+Q+Q)	0.24	-0.59	0.43	-0.57
3.(o+Q+o+Q)	0.21	-0.56	0.43	-0.57
4.(Q+o+Q+o)	0.04	-0.02	0.00	0.00
5.(Q+Q+o+Q)	0.03	-0.01	0.00	0.00
6.(o+Q+Q+o)	0.21	-0.56	0.43	-0.57
7.(o+o+Q+Q)	0.25	-0.59	0.43	-0.57
Zemin itkisi	0.00	0.00	0.00	0.00
X-Deprem+%5	-5.77	-9.23	-3.30	-3.30
X-Deprem-%5	-3.36	-5.37	-1.92	-1.92
Y-Deprem+%5	-0.30	-0.41	-0.16	-0.16
Y-Deprem-%5	-2.16	-4.99	-1.79	-1.79
X-Rüzgar+%5	-1.02	-1.65	-0.59	-0.59
X-Rüzgar-%5	-0.63	-1.00	-0.36	-0.36
Y-Rüzgar+%5	-0.07	-0.10	-0.04	-0.04
Y-Rüzgar-%5	-0.64	-1.01	-0.36	-0.36
MATERIAL:E1	B330	CS420 Fk:	4.98	5.18 cm²

BETONARME :	üstMsol	altMsol	Mac.	üstMsağ	altMsağ
Mdus. (tm) :	-2.26	-0.37	(2.16m)	2.93	0.82
max M (tm) :	9.16	-2.96	5.92	-15.02	4.55
fcd (kg/cm²) :	200.00	200.00	200.00	200.00	200.00
As' (cm²) :	0.00	0.00	0.00	0.00	0.00
As (cm²) :	14.78	7.39	11.82	14.78	7.39

DONATI: 4ø14(mon.)+4ø16(göv.)+3ø20(sol üst ila.)+3ø20(sag üst ila.)
4ø20(düz)+ 2xø10/11(etriye)

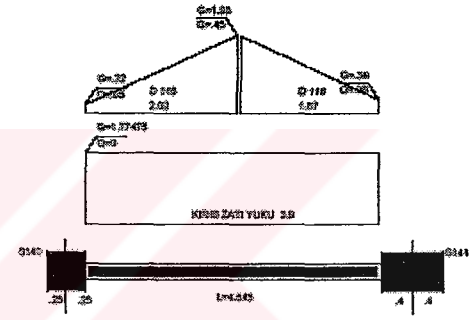

K129
Bw/D= 50/ 90 I= 570 J= 571 Tabla : B1/D1= 37/ 26cm

KOMBİNASYON	SolM (tm)	SağM (tm)	SolVd (t)	SağVd (t)
1.(G+G+G+G)	15.11	-16.32	10.53	-10.87
2.(Q+Q+Q+Q)	1.54	-1.95	1.19	-1.22
3.(o+Q+o+Q)	1.85	-1.64	1.24	-1.18
4.(Q+o+Q+o)	0.00	-0.31	-0.04	-0.04
5.(Q+Q+o+Q)	0.04	-0.18	-0.02	-0.02
6.(o+Q+Q+o)	1.87	-1.64	1.24	-1.18
7.(o+o+Q+Q)	1.80	-2.08	1.17	-1.25
Zemin itkisi	0.00	0.00	0.00	0.00
X-Deprem+%5	-12.47	-12.45	-3.70	-3.70
X-Deprem-%5	-6.58	-6.09	-1.81	-1.81
Y-Deprem+%5	3.55	3.20	0.96	0.96
Y-Deprem-%5	-4.61	-4.35	-1.28	-1.28
X-Rüzgar+%5	-2.40	-2.22	-0.66	-0.66
X-Rüzgar-%5	-1.25	-1.16	-0.34	-0.34
Y-Rüzgar+%5	0.70	0.63	0.19	0.19
Y-Rüzgar-%5	-0.92	-0.87	-0.26	-0.26
MATERIAL:E1	B330	CS420 Fk:	6.09	6.09 cm²

BETONARME :	üstMsol	altMsol	Mac.	üstMsağ	altMsağ
Mdus. (tm) :	-6.17	0.00	(3.50m)	6.32	0.00
max M (tm) :	20.44	0.00	12.37	-30.86	0.00
fcd (kg/cm²) :	200.00	0.00	200.00	200.00	0.00
As' (cm²) :	0.00	0.00	0.00	0.00	0.00
As (cm²) :	14.78	7.39	11.82	14.78	7.39

DONATI: 4ø14(mon.)+4ø16(göv.)+1ø20(sol üst ila.)
4ø16(düz)+2ø20(pilye)+ 2xø10/20/11(etriye)

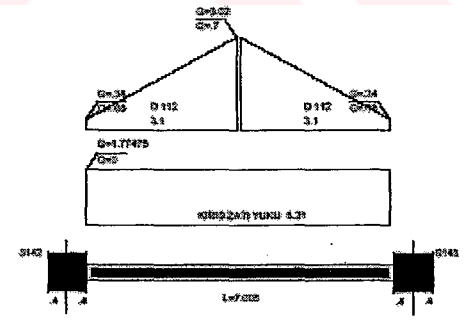

STAAD.Pro V11

FİRMA : | 03-23-2005

PROJE : perdeli sistem (perdeli.ST4)

K130
Bw/D= 50/ 90 I= 571 J= 654 Tabla : B1/D1= 37/ 26cm

KOMBİNASYON	SolM (tm)	SağM (tm)	SolVd (t)	SağVd (t)
1.(G+G+G+G)	16.32	-15.10	10.88	-10.52
2.(Q+Q+Q+Q)	1.96	-1.84	1.23	-1.19
3.(o+Q+o+Q)	0.29	-0.02	0.04	0.04
4.(Q+o+Q+o)	1.66	-1.82	1.19	-1.23
5.(Q+Q+o+Q)	1.69	-1.94	1.17	-1.24
6.(o+Q+Q+o)	0.25	-0.02	0.03	0.03
7.(o+o+Q+Q)	1.96	-1.74	1.24	-1.18
Zemin itkisi	0.00	0.00	0.00	0.00
X-Deprem+%5	-12.45	-13.47	-3.70	-3.70
X-Deprem-%5	-6.09	-6.58	-1.81	-1.81
Y-Deprem+%5	4.35	4.61	1.28	1.28
Y-Deprem-%5	-3.20	-3.55	-0.96	-0.96
X-Rüzgar+%5	-2.22	-2.40	-0.66	-0.66
X-Rüzgar-%5	-1.16	-1.25	-0.34	-0.34
Y-Rüzgar+%5	0.87	0.92	0.26	0.26
Y-Rüzgar-%5	-0.63	-0.70	-0.19	-0.19

MATERIAL:E1 B30 CS420 Fk: 5.18 8.00 cm²

BETONARME	:	üstMsol	altMsol	Mac.	üstMsağ	altMsağ
Mdur. (tm)	:	-6.32	0.00	(2.54m)	6.16	0.00
max M (tm)	:	30.74	0.00	12.36	-30.50	0.00
fcd (kg/cm²)	:	200.00	0.00	200.00	200.00	0.00
As' (cm²)	:	0.00	0.00	0.00	0.00	0.00
As (cm²)	:	14.78	7.39	11.82	14.78	7.39

DONATI: 4ø14(mon.)+4ø16(göv.)+1ø20(sag üst ila.)
4ø16(dün)+2ø20(pilye)+ 2xø10/20/11(etriye)

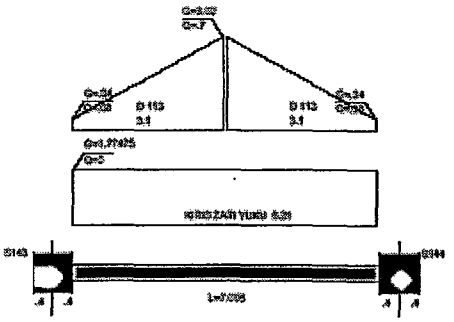

K132
Bw/D= 50/ 90 I= 97 J= 130 Tabla : B2/D2= 40/ 26cm

KOMBİNASYON	SolM (tm)	SağM (tm)	SolVd (t)	SağVd (t)
1.(G+G+G+G)	26.25	-27.93	15.15	-15.52
2.(Q+Q+Q+Q)	3.54	-3.71	1.90	-1.94
3.(o+Q+o+Q)	3.44	-3.59	1.90	-1.94
4.(Q+o+Q+o)	0.10	-0.12	0.00	0.00
5.(Q+Q+o+Q)	0.08	-0.08	0.00	0.00
6.(o+Q+Q+o)	3.45	-3.59	1.90	-1.94
7.(o+o+Q+Q)	3.56	-3.75	1.90	-1.94
Zemin itkisi	0.00	0.00	0.00	0.00
X-Deprem+%5	-6.94	-5.54	-1.32	-1.32
X-Deprem-%5	0.25	0.23	0.05	0.05
Y-Deprem+%5	-3.70	-3.41	-0.81	-0.81
Y-Deprem-%5	-11.16	-10.26	-2.44	-2.44
X-Rüzgar+%5	-1.10	-1.01	-0.24	-0.24
X-Rüzgar-%5	-0.05	-0.04	-0.01	-0.01
Y-Rüzgar+%5	-0.80	-0.73	-0.17	-0.17
Y-Rüzgar-%5	-2.27	-2.09	-0.50	-0.50

MATERIAL:E1 B30 CS420 Fk: 10.42 10.42 cm²

BETONARME	:	üstMsol	altMsol	Mac.	üstMsağ	altMsağ
Mdur. (tm)	:	-9.70	0.00	(4.40m)	9.32	0.00
max M (tm)	:	42.58	0.00	23.96	-45.10	0.00
fcd (kg/cm²)	:	200.00	0.00	200.00	200.00	0.00
As' (cm²)	:	0.00	0.00	0.00	0.00	0.00
As (cm²)	:	14.78	7.39	11.82	14.78	7.39

DONATI: 4ø14(mon.)+4ø16(göv.)+1ø20(sol üst ila.)
4ø16(dün)+3ø16(pilye)+ 2xø10/20/11(etriye)

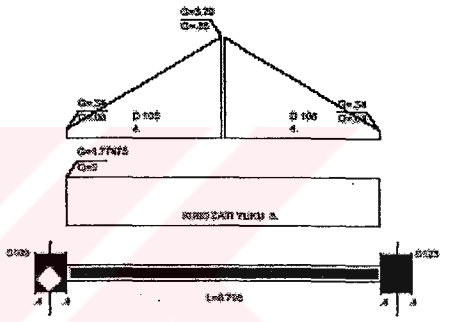

K131
Bw/D= 50/ 90 I= 120 J= 169 Tabla : B2/D2= 25/ 26cm

KOMBİNASYON	SolM (tm)	SağM (tm)	SolVd (t)	SağVd (t)
1.(G+G+G+G)	10.55	-5.58	7.32	-5.32
2.(Q+Q+Q+Q)	1.19	-0.56	0.74	-0.48
3.(o+Q+o+Q)	0.30	0.20	0.20	0.20
4.(Q+o+Q+o)	0.39	-0.76	0.52	-0.68
5.(Q+Q+o+Q)	0.43	-0.62	0.52	-0.65
6.(o+Q+Q+o)	0.77	0.19	0.19	0.19
7.(o+o+Q+Q)	1.19	-0.49	0.75	-0.47
Zemin itkisi	0.00	0.00	0.00	0.00
X-Deprem+%5	-7.22	-7.79	-3.01	-3.01
X-Deprem-%5	0.18	0.21	0.08	0.08
Y-Deprem+%5	-3.88	-4.26	-1.62	-1.62
Y-Deprem-%5	-12.66	-13.76	-5.29	-5.29
X-Rüzgar+%5	-1.32	-1.42	-0.55	-0.55
X-Rüzgar-%5	-0.08	-0.08	-0.03	-0.03
Y-Rüzgar+%5	-0.84	-0.92	-0.35	-0.35
Y-Rüzgar-%5	-2.59	-2.81	-1.08	-1.08

MATERIAL:E1 B30 CS420 Fk: 6.96 4.86 cm²

BETONARME	:	üstMsol	altMsol	Mac.	üstMsağ	altMsağ
Mdur. (tm)	:	-5.34	-0.52	(2.72m)	4.44	-0.20
max M (tm)	:	24.41	-3.17	3.48	-20.15	8.74
fcd (kg/cm²)	:	200.00	200.00	200.00	200.00	200.00
As' (cm²)	:	0.00	0.00	0.00	0.00	0.00
As (cm²)	:	14.78	7.39	11.82	14.78	7.39

DONATI: 4ø14(mon.)+4ø16(göv.)+1ø20(sol üst ila.)+3ø20(sag üst ila.)
4ø20(dün)+ 2xø10/11(etriye)

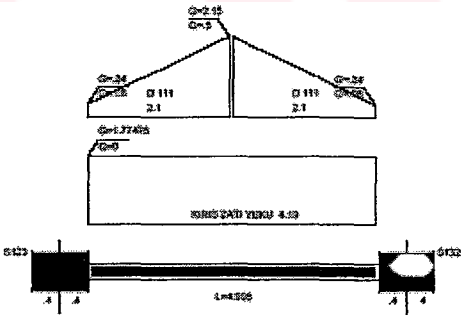

STAA-CAD V11

FİRMA :	03-23-2005
PROJE : perdeli sistem	(perdeli.ST4)

K133
Bw/D= 50/ 90 I= 275 J= 339 Tabla : B2/D2= 23/ 26cm

KOMBİNASYON	SolM (tm)	SağM (tm)	SolVd (t)	SağVd (t)
1.(G+G+G+G)	3.32	-4.96	5.41	-5.86
2.(Q+Q+Q+Q)	0.27	-0.55	0.44	-0.56
3.(o+Q+o+Q)	0.22	-0.55	0.43	-0.57
4.(Q+o+Q+o)	0.05	0.00	0.01	0.01
5.(Q+Q+o+Q)	0.05	0.02	0.02	0.02
6.(o+Q+Q+o)	0.23	-0.55	0.44	-0.57
7.(o+o+Q+Q)	0.27	-0.57	0.44	-0.57
Zemin itkisi	0.00	0.00	0.00	0.00
X-Deprem+%5	-1.82	-2.94	-1.05	-1.05
X-Deprem-%5	0.78	1.23	0.44	0.44
Y-Deprem+%5	-3.55	-5.72	-2.04	-2.04
Y-Deprem-%5	-6.62	-10.67	-3.80	-3.80
X-Rüzgar+%5	-0.34	-0.55	-0.20	-0.20
X-Rüzgar-%5	0.09	0.15	0.05	0.05
Y-Rüzgar+%5	-0.75	-1.20	-0.43	-0.43
Y-Rüzgar-%5	-1.36	-2.19	-0.78	-0.78

MATERIAL:El B330 CS420 Fk: 5.04 5.12 cm²

BETONARME :	üstMsol	altMsol	Mac.	üstMsağ	altMsağ
Mdüz. (tm) :	-2.41	-0.27	(2.18m)	4.09	0.59
max M (tm) :	10.22	-3.64	5.98	-16.20	6.20
fcd (kg/cm²) :	200.00	200.00	200.00	200.00	200.00
As' (cm²) :	0.00	0.00	0.00	0.00	0.00
As (cm²) :	14.78	7.39	11.82	14.78	7.39

DONATI: 4ø14(mon.)+4ø16(göv.)+3ø20(sol üst ila.)+3ø20(sag üst ila.)
4ø20(düz)+ 2xø10/11(etriye)

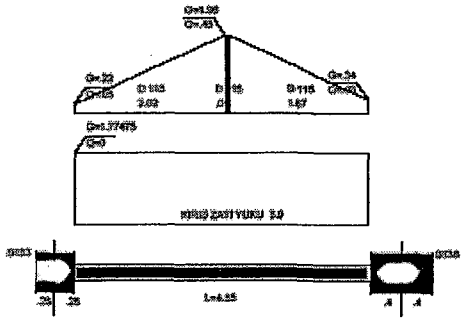

K134
Bw/D= 50/ 90 I= 25 J= 45 Tabla : B2/D2= 23/ 26cm

KOMBİNASYON	SolM (tm)	SağM (tm)	SolVd (t)	SağVd (t)
1.(G+G+G+G)	3.45	-4.12	5.35	-5.93
2.(Q+Q+Q+Q)	0.44	-0.33	0.52	-0.45
3.(o+Q+o+Q)	0.45	-0.27	0.55	-0.48
4.(Q+o+Q+o)	-0.02	-0.07	-0.02	-0.02
5.(Q+Q+o+Q)	-0.05	-0.08	-0.03	-0.02
6.(o+Q+Q+o)	0.43	-0.28	0.54	-0.49
7.(o+o+Q+Q)	0.49	-0.31	0.55	-0.48
Zemin itkisi	0.00	0.00	0.00	0.00
X-Deprem+%5	-5.22	-3.26	-1.87	-1.87
X-Deprem-%5	-1.16	-0.72	-0.41	-0.41
Y-Deprem+%5	-6.02	-3.70	-2.14	-2.14
Y-Deprem-%5	-10.85	-6.72	-3.86	-3.86
X-Rüzgar+%5	-0.94	-0.59	-0.34	-0.34
X-Rüzgar-%5	-0.26	-0.16	-0.09	-0.09
Y-Rüzgar+%5	-1.26	-0.77	-0.45	-0.45
Y-Rüzgar-%5	-2.22	-1.38	-0.79	-0.79

MATERIAL:El B330 CS420 Fk: 4.39 5.28 cm²

BETONARME :	üstMsol	altMsol	Mac.	üstMsağ	altMsağ
Mdüz. (tm) :	-3.90	-0.38	(2.28m)	2.57	0.37
max M (tm) :	14.79	-7.74	6.48	-11.18	3.01
fcd (kg/cm²) :	200.00	200.00	200.00	200.00	200.00
As' (cm²) :	0.00	0.00	0.00	0.00	0.00
As (cm²) :	14.78	7.39	11.82	14.78	7.39

DONATI: 4ø14(mon.)+4ø16(göv.)+3ø20(sol üst ila.)+3ø20(sag üst ila.)
4ø20(düz)+ 2xø10/11(etriye)

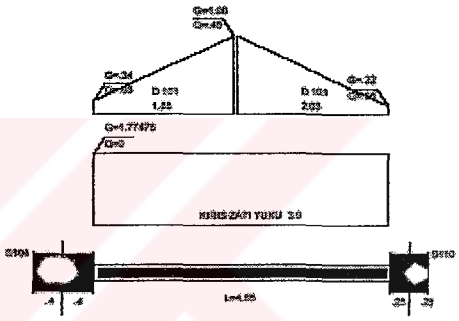

K138
Bw/D= 50/ 90 I= 4 J= 12 Tabla : B2/D2= 7/ 26cm

KOMBİNASYON	SolM (tm)	SağM (tm)	SolVd (t)	SağVd (t)
1.(G+G+G+G)	2.47	1.89	5.66	2.83
2.(Q+Q+Q+Q)	0.42	0.24	0.59	0.43
3.(o+Q+o+Q)	0.41	0.24	0.52	0.52
4.(Q+o+Q+o)	0.01	0.01	0.06	-0.09
5.(Q+Q+o+Q)	0.01	0.01	0.07	-0.08
6.(o+Q+Q+o)	0.43	0.23	0.59	0.43
7.(o+o+Q+Q)	0.40	0.23	0.51	0.51
Zemin itkisi	0.00	0.00	0.00	0.00
X-Deprem+%5	0.69	-0.10	0.48	0.48
X-Deprem-%5	0.98	0.67	1.35	1.35
Y-Deprem+%5	0.68	0.35	0.83	0.83
Y-Deprem-%5	0.33	-0.57	-0.20	-0.20
X-Rüzgar+%5	0.12	-0.02	0.08	0.02
X-Rüzgar-%5	0.17	0.11	0.22	0.22
Y-Rüzgar+%5	0.14	0.07	0.17	0.17
Y-Rüzgar-%5	0.07	-0.12	-0.04	-0.04

MATERIAL:El B330 CS420 Fk: 1.90 0.00 cm²

BETONARME :	üstMsol	altMsol	Mac.	üstMsağ	altMsağ
Mdüz. (tm) :	0.00	0.00	(1.23m)	0.00	0.00
max M (tm) :	5.53	0.00	2.67	0.00	3.03
fcd (kg/cm²) :	200.00	0.00	200.00	0.00	200.00
As' (cm²) :	0.00	0.00	0.00	0.00	0.00
As (cm²) :	2.33	0.00	0.86	0.00	0.98

DONATI: 4ø14(mon.)+4ø16(göv.)
4ø16(düz)+ 2xø10/11(etriye)

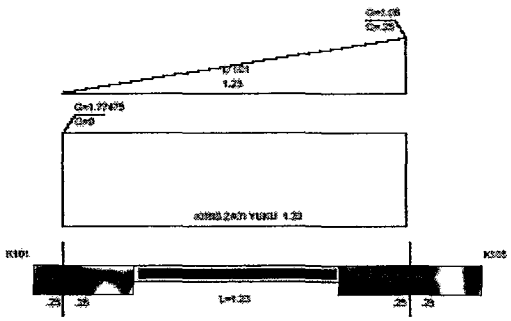

STAA-CAD V11

FİRMA :	03-23-2005
PROJE : perdeli sistem	(perdeli.ST4)

K156
Bw/D= 50/ 90 I= 22 J= 42 Tabla : B1/D1= 7/ 26cm

KOMBİNASYON	SolM (tm)	SağM (tm)	SolVd (t)	SağVd (t)
1.(G+G+G+G)	2.46	1.89	5.66	2.83
2.(Q+Q+Q+Q)	0.42	0.24	0.58	0.43
3.(o+Q+o+Q)	-0.01	-0.04	-0.04	-0.04
4.(Q+o+Q+o)	0.43	0.28	0.62	0.47
5.(Q+Q+o+Q)	0.40	0.26	0.58	0.42
6.(o+Q+Q+o)	0.41	0.22	0.56	0.41
7.(o+o+Q+Q)	0.03	0.00	0.02	0.02
Zemin itkisi	0.00	0.00	0.00	0.00
X-Deprem+%5	-0.69	0.10	-0.48	-0.48
X-Deprem-%5	-0.98	-0.67	-1.35	-1.35
Y-Deprem+%5	0.33	-0.57	-0.20	-0.20
Y-Deprem-%5	0.68	0.25	0.83	0.83
X-Rüzgar+%5	-0.12	0.02	-0.08	-0.08
X-Rüzgar-%5	-0.17	-0.11	-0.22	-0.22
Y-Rüzgar+%5	0.07	-0.12	-0.04	-0.04
Y-Rüzgar-%5	0.14	0.07	0.17	0.17

MATERIAL:E1 BS20 CS420 Fk: 1.90 0.00 cm²

BETONARME :	üstMsol	altMsol	Mac.	üstMsağ	altMsağ
Mdüz. (tm) :	0.00	0.00	(1.23m)	0.00	0.00
max M (tm) :	5.53	0.00	3.09	0.00	3.09
fcd (kg/cm²) :	200.00	0.00	200.00	0.00	200.00
As' (cm²) :	0.00	0.00	0.00	0.00	0.00
As (cm²) :	2.33	0.00	1.00	0.00	1.00

DONATI: 4ø14(mon.)+4ø16(göv.)
4ø16(düz)+ 2xø10/11(etriye)

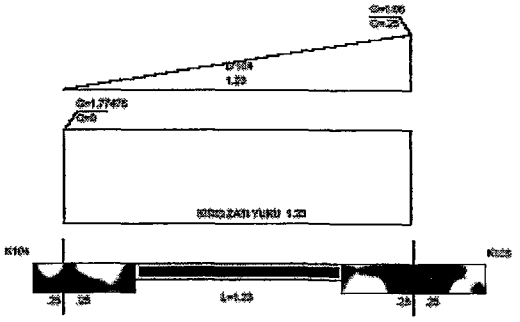

K157
Bw/D= 50/ 90 I= 408 J= 485 Tabla : B1/D1= 23/ 26cm

KOMBİNASYON	SolM (tm)	SağM (tm)	SolVd (t)	SağVd (t)
1.(G+G+G+G)	2.32	-4.96	5.41	-5.86
2.(Q+Q+Q+Q)	0.27	-0.55	0.44	-0.56
3.(o+Q+o+Q)	0.22	-0.56	0.42	-0.57
4.(Q+o+Q+o)	0.05	0.01	0.01	0.01
5.(Q+Q+o+Q)	0.05	0.03	0.02	0.02
6.(o+Q+Q+o)	0.23	-0.55	0.44	-0.57
7.(o+o+Q+Q)	0.26	-0.57	0.44	-0.57
Zemin itkisi	0.00	0.00	0.00	0.00
X-Deprem+%5	1.82	2.94	1.05	1.05
X-Deprem-%5	-0.78	-1.22	-0.44	-0.44
Y-Deprem+%5	-6.63	-10.67	-3.80	-3.80
Y-Deprem-%5	-2.55	-5.72	-2.04	-2.04
X-Rüzgar+%5	0.24	0.55	0.20	0.20
X-Rüzgar-%5	-0.09	-0.15	-0.05	-0.05
Y-Rüzgar+%5	-1.26	-2.19	-0.78	-0.78
Y-Rüzgar-%5	-0.75	-1.20	-0.43	-0.43

MATERIAL:E1 BS30 CS420 Fk: 5.04 5.13 cm²

BETONARME :	üstMsol	altMsol	Mac.	üstMsağ	altMsağ
Mdüz. (tm) :	-2.41	-0.27	(2.18m)	4.09	0.59
max M (tm) :	10.22	-3.65	5.98	-16.20	6.20
fcd (kg/cm²) :	200.00	200.00	200.00	200.00	200.00
As' (cm²) :	0.00	0.00	0.00	0.00	0.00
As (cm²) :	14.78	7.39	11.82	14.78	7.39

DONATI: 4ø14(mon.)+4ø16(göv.)+3ø20(sol üst ila.)+3ø20(sag üst ila.)
4ø20(düz)+ 2xø10/11(etriye)

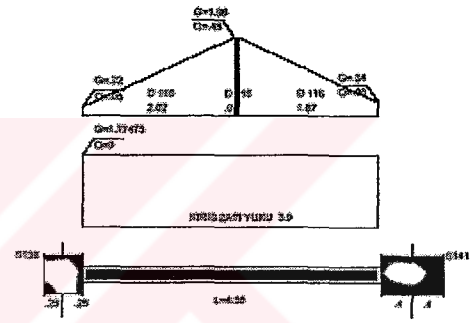

K158
Bw/D= 50/ 90 I= 66 J= 95 Tabla : B1/D1= 23/ 26cm

KOMBİNASYON	SolM (tm)	SağM (tm)	SolVd (t)	SağVd (t)
1.(G+G+G+G)	2.45	-4.12	5.35	-5.93
2.(Q+Q+Q+Q)	0.44	-0.33	0.53	-0.50
3.(o+Q+o+Q)	0.56	-0.24	0.58	-0.45
4.(Q+o+Q+o)	-0.13	-0.10	-0.05	-0.05
5.(Q+Q+o+Q)	-0.16	-0.11	-0.06	-0.06
6.(o+Q+Q+o)	0.45	-0.28	0.55	-0.48
7.(o+o+Q+Q)	0.57	-0.29	0.57	-0.46
Zemin itkisi	0.00	0.00	0.00	0.00
X-Deprem+%5	5.22	3.26	1.87	1.87
X-Deprem-%5	1.16	0.72	0.41	0.41
Y-Deprem+%5	-10.85	-6.72	-3.86	-3.86
Y-Deprem-%5	-6.03	-3.70	-2.14	-2.14
X-Rüzgar+%5	0.94	0.59	0.34	0.34
X-Rüzgar-%5	0.26	0.16	0.09	0.09
Y-Rüzgar+%5	-2.22	-1.38	-0.79	-0.79
Y-Rüzgar-%5	-1.26	-0.77	-0.45	-0.45

MATERIAL:E1 BS30 CS420 Fk: 4.89 5.28 cm²

BETONARME :	üstMsol	altMsol	Mac.	üstMsağ	altMsağ
Mdüz. (tm) :	-3.90	-0.38	(2.28m)	2.57	0.27
max M (tm) :	14.87	-7.74	6.41	-11.18	3.01
fcd (kg/cm²) :	200.00	200.00	200.00	200.00	200.00
As' (cm²) :	0.00	0.00	0.00	0.00	0.00
As (cm²) :	14.78	7.39	11.82	14.78	7.39

DONATI: 4ø14(mon.)+4ø16(göv.)+3ø20(sol üst ila.)+3ø20(sag üst ila.)
4ø20(düz)+ 2xø10/11(etriye)

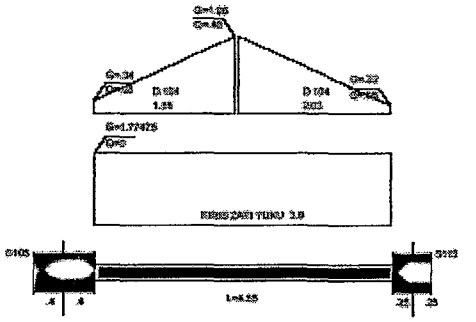

STAA-CAD V11

FİRMA : | 03-23-2005

PROJE : perdeli sistem (perdeli.ST4)

K160
Bw/D= 50/ 90 I= 167 J= 213 Tabla : B1/D1= 48/ 26cm

KOMBİNASYON	SolM (tm)	SağM (tm)	SolVd (t)	SağVd (t)
1.(G+G+G+G)	26.35	-27.82	15.15	-15.52
2.(Q+Q+Q+Q)	3.54	-3.71	1.90	-1.94
3.(o+Q+o+Q)	3.42	-3.60	1.90	-1.94
4.(Q+o+Q+o)	0.11	-0.11	0.00	0.00
5.(Q+o+o+Q)	0.09	-0.06	0.00	0.00
6.(o+Q+Q+o)	3.45	-3.60	1.90	-1.94
7.(o+o+Q+Q)	3.55	-3.75	1.90	-1.94
Zemin itkisi	0.00	0.00	0.00	0.00
X-Deprem+%5	6.04	5.54	1.32	1.32
X-Deprem-%5	-0.25	-0.23	-0.05	-0.05
Y-Deprem+%5	-11.16	-10.26	-2.44	-2.44
Y-Deprem-%5	-3.70	-3.42	-0.81	-0.81
X-Rüzgar+%5	1.10	1.01	0.24	0.24
X-Rüzgar-%5	0.05	0.04	0.01	0.01
Y-Rüzgar+%5	-2.27	-2.09	-0.50	-0.50
Y-Rüzgar-%5	-0.80	-0.73	-0.17	-0.17

MATERIAL:E1 BS30 CS420 Fk: 10.43 10.43 cm²

BETONARME :	üstMsol	altMsol	Max.	üstMsağ	altMsağ
Mdur. (tm) :	-9.70	0.00	(4.40m)	9.93	0.00
max M (tm) :	42.57	0.00	23.96	-45.11	0.00
fcd (kg/cm²) :	200.00	0.00	208.00	200.00	0.00
As' (cm²) :	0.00	0.00	0.00	0.00	0.00
As (cm²) :	14.78	7.39	11.82	14.78	7.39

DONATI: 4ø14(mon.)+4ø16(göv.)+1ø20(sol üst ila.)
4ø16(düz)+3ø16(pilye)+ 2xø10/20/11(etriye)

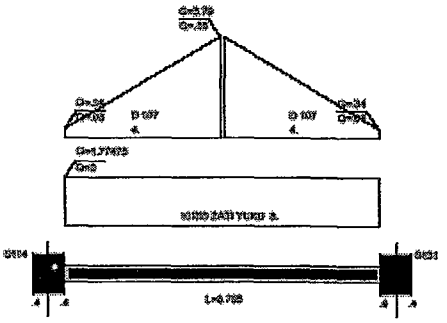

K159
Bw/D= 50/ 90 I= 213 J= 271 Tabla : B1/D1= 25/ 26cm

KOMBİNASYON	SolM (tm)	SağM (tm)	SolVd (t)	SağVd (t)
1.(G+G+G+G)	10.55	-5.58	7.32	-5.34
2.(Q+Q+Q+Q)	1.19	-0.56	0.74	-0.48
3.(o+Q+o+Q)	0.82	0.21	0.21	0.21
4.(Q+o+Q+o)	0.37	-0.77	0.52	-0.69
5.(Q+Q+o+Q)	0.40	-0.84	0.52	-0.70
6.(o+Q+Q+o)	0.78	0.20	0.20	0.20
7.(o+o+Q+Q)	1.20	-0.48	0.75	-0.47
Zemin itkisi	0.00	0.00	0.00	0.00
X-Deprem+%5	7.22	7.79	3.01	3.01
X-Deprem-%5	-0.18	-0.21	-0.08	-0.08
Y-Deprem+%5	-12.67	-13.76	-5.29	-5.29
Y-Deprem-%5	-3.89	-4.26	-1.63	-1.63
X-Rüzgar+%5	1.32	1.42	0.55	0.55
X-Rüzgar-%5	0.08	0.08	0.03	0.03
Y-Rüzgar+%5	-2.59	-2.81	-1.08	-1.08
Y-Rüzgar-%5	-0.84	-0.92	-0.35	-0.35

MATERIAL:E1 BS30 CS420 Fk: 6.06 4.88 cm²

BETONARME :	üstMsol	altMsol	Max.	üstMsağ	altMsağ
Mdur. (tm) :	-5.24	-0.52	(2.72m)	4.44	-0.20
max M (tm) :	24.41	-2.17	3.48	-20.18	8.74
fcd (kg/cm²) :	200.00	200.00	208.00	200.00	200.00
As' (cm²) :	0.00	0.00	0.00	0.00	0.00
As (cm²) :	14.78	7.39	11.82	14.78	7.39

DONATI: 4ø14(mon.)+4ø16(göv.)+1ø20(sol üst ila.)+3ø20(sag üst ila.)
4ø20(düz)+ 2xø10/11(etriye)

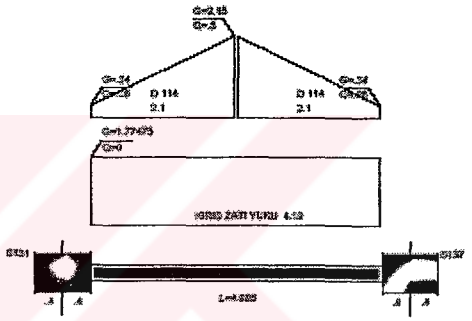

K501
Bw/D= 50/ 90 I= 49 J= 28 Tabla : B2/D2= 14/ 26cm

KOMBİNASYON	SolM (tm)	SağM (tm)	SolVd (t)	SağVd (t)
1.(G+G+G+G)	-5.99	-22.35	-6.55	-12.72
2.(Q+Q+Q+Q)	-0.55	-1.88	-0.67	-1.05
3.(o+Q+o+Q)	-0.41	-1.19	-0.57	-0.57
4.(Q+o+Q+o)	-0.14	-0.69	-0.10	-0.48
5.(Q+o+o+Q)	-0.39	-1.23	-0.58	-0.58
6.(o+Q+Q+o)	-0.12	-0.78	-0.13	-0.50
7.(o+o+Q+Q)	-0.59	-1.75	-0.64	-1.02
Zemin itkisi	0.00	0.00	0.00	0.00
X-Deprem+%5	0.46	-2.64	-0.78	-0.78
X-Deprem-%5	1.29	-7.41	-2.19	-2.19
Y-Deprem+%5	1.34	-7.22	-2.10	-2.10
Y-Deprem-%5	0.36	-1.58	-0.44	-0.44
X-Rüzgar+%5	0.07	-0.43	-0.13	-0.13
X-Rüzgar-%5	0.21	-1.21	-0.36	-0.36
Y-Rüzgar+%5	0.27	-1.44	-0.42	-0.42
Y-Rüzgar-%5	0.07	-0.33	-0.09	-0.09

MATERIAL:E1 BS30 CS420 Fk: 0.00 5.61 cm²

BETONARME :	üstMsol	altMsol	Max.	üstMsağ	altMsağ
Mdur. (tm) :	0.00	0.00	(0.00m)	7.79	0.00
max M (tm) :	0.00	-9.32	0.00	-34.28	0.00
fcd (kg/cm²) :	0.00	200.00	0.00	200.00	0.00
As' (cm²) :	0.00	0.00	0.00	0.00	0.00
As (cm²) :	0.00	3.02	0.00	14.78	7.39

DONATI: 4ø14(mon.)+4ø16(göv.)+3ø20(sag üst ila.)
4ø16(düz)+ 2xø10/20/11(etriye)

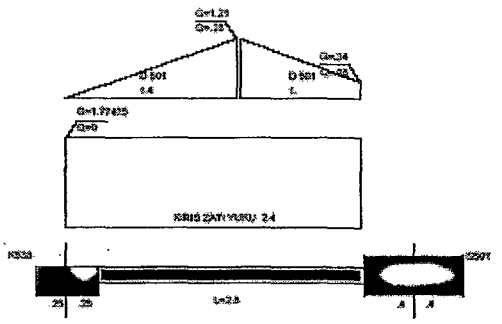

STAAD.Pro V11

FİRMA : | 03-23-2005

PROJE : perdeli sistem (perdeli.ST4)

S4001 KOLONU
I/J :2564/2481 Bx/By :80/80 βx:1.000 βy:1.000 Hk :3.25 m
Material:EI BS20 CS420 Güç.Kol. Cx:1.000 Cy:1.000

KOMBİNASYON	maxNd (t)	üstMx	altMx	üstMy	altMy (tm)
1.(G+G+G+G)	12.45	17.34	13.50	1.67	1.56
2.(Q+Q+Q+Q)	1.00	1.28	1.07	0.06	0.06
3.(o+Q+o+Q)	0.17	0.68	0.51	0.02	0.02
4.(Q+o+Q+o)	0.78	0.71	0.57	0.02	0.04
5.(Q+Q+o+Q)	0.08	0.84	0.78	0.04	0.03
6.(o+Q+Q+o)	1.00	1.12	0.76	0.06	0.04
7.(o+o+Q+Q)	0.81	0.82	0.61	0.03	0.05
Zemin itkisi	0.00	0.00	0.00	0.00	0.00
X-Deprem+%5	1.81	-2.44	-2.11	0.51	0.45
X-Deprem-%5	0.25	0.73	0.37	0.14	0.14
Y-Deprem+%5	2.38	4.48	3.58	-0.19	-0.32
Y-Deprem-%5	3.63	0.68	0.60	0.26	0.05
X-Rüzgar+%5	0.14	-0.28	-0.22	0.05	0.04
X-Rüzgar-%5	0.05	-0.02	-0.02	0.01	0.01
Y-Rüzgar+%5	0.22	0.48	0.37	-0.04	-0.05
Y-Rüzgar-%5	0.34	0.10	0.09	0.00	-0.01

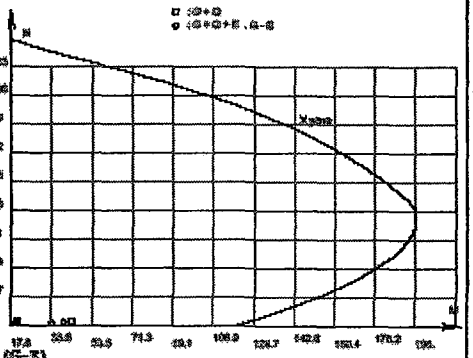

BETONARME :	X-(G+Q)	X-(G+Q+E)	Y-(G+Q)	Y-(G+Q+E)	X-(G-E)	Y-(G-E)
max. Nd (t) :	19.025	15.604	19.025	14.761	9.893	7.581
minor M (tm):	2.439	1.539	26.491	16.262	0.993	14.929
major M (tm):	26.491	23.204	2.439	2.244	16.048	1.248
fcd (kg/cm²):	200.000	200.000	200.000	200.000	200.000	200.000
μ :	0.0025	0.0025	0.0025	0.0025	0.0025	0.0025
As (cm²):	16.001	16.000	16.000	16.000	16.000	16.000

Cqa=1.000

DONATI :2x7ø20+2x5ø20 (govde) + ø10/20/10(etriye)

S3001 KOLONU
I/J :1724/1651 Bx/By :80/80 βx:1.000 βy:1.000 Hk :3.25 m
Material:EI BS20 CS420 Güç.Kol. Cx:1.000 Cy:1.000

KOMBİNASYON	maxNd (t)	üstMx	altMx	üstMy	altMy (tm)
1.(G+G+G+G)	113.38	10.97	10.97	1.28	1.32
2.(Q+Q+Q+Q)	9.62	0.87	0.87	0.04	0.05
3.(o+Q+o+Q)	4.28	0.44	0.42	0.03	0.02
4.(Q+o+Q+o)	4.78	0.43	0.45	0.01	0.03
5.(Q+Q+o+Q)	6.07	0.68	0.57	0.02	0.02
6.(o+Q+Q+o)	6.35	0.47	0.48	0.02	0.04
7.(o+o+Q+Q)	5.70	0.59	0.69	0.04	0.04
Zemin itkisi	0.00	0.00	0.00	0.00	0.00
X-Deprem+%5	-11.42	-1.68	-1.23	1.06	1.02
X-Deprem-%5	-12.26	3.15	2.52	0.21	0.20
Y-Deprem+%5	-45.84	5.04	5.01	1.84	2.22
Y-Deprem-%5	-47.88	-0.69	-0.64	2.85	3.19
X-Rüzgar+%5	-0.39	-0.26	-0.22	0.12	0.11
X-Rüzgar-%5	-0.60	0.25	0.26	0.03	0.03
Y-Rüzgar+%5	-3.24	0.65	0.64	0.21	0.22
Y-Rüzgar-%5	-2.95	-0.08	-0.06	0.34	0.23

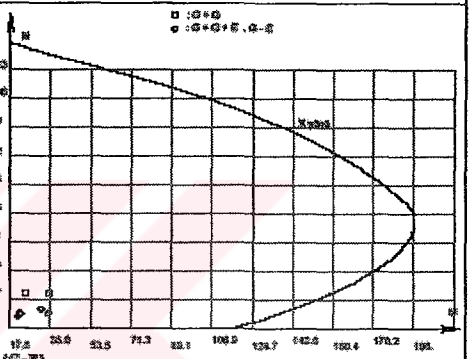

BETONARME :	X-(G+Q)	X-(G+Q+E)	Y-(G+Q)	Y-(G+Q+E)	X-(G-E)	Y-(G-E)
max. Nd (t) :	168.014	78.236	168.014	71.203	89.794	53.195
minor M (tm):	1.854	3.156	16.739	11.198	1.385	14.877
major M (tm):	16.749	16.882	6.553	4.559	13.389	3.407
fcd (kg/cm²):	200.000	200.000	200.000	200.000	200.000	200.000
μ :	0.0025	0.0025	0.0025	0.0025	0.0025	0.0025
As (cm²):	16.001	16.000	16.000	16.000	16.000	16.000

Cqa=0.603

DONATI :2x7ø20+2x5ø20 (govde) + ø10/20/10(etriye)

S2001 KOLONU
I/J :904/821 Bx/By :80/80 βx:1.000 βy:1.000 Hk :3.25 m
Material:EI BS20 CS420 Güç.Kol. Cx:1.000 Cy:1.000

KOMBİNASYON	maxNd (t)	üstMx	altMx	üstMy	altMy (tm)
1.(G+G+G+G)	217.02	10.61	10.59	1.23	1.30
2.(Q+Q+Q+Q)	18.46	0.84	0.84	0.03	0.04
3.(o+Q+o+Q)	8.44	0.43	0.41	0.03	0.02
4.(Q+o+Q+o)	8.94	0.41	0.43	0.01	0.03
5.(Q+Q+o+Q)	11.71	0.44	0.45	0.02	0.04
6.(o+Q+Q+o)	11.34	0.58	0.67	0.04	0.04
7.(o+o+Q+Q)	11.70	0.67	0.56	0.02	0.02
Zemin itkisi	0.00	0.00	0.00	0.00	0.00
X-Deprem+%5	-29.18	-2.62	-1.92	1.22	1.19
X-Deprem-%5	-30.02	3.09	2.53	0.21	0.21
Y-Deprem+%5	-117.64	5.96	5.93	1.49	2.44
Y-Deprem-%5	-116.65	-1.08	-1.03	2.70	3.61
X-Rüzgar+%5	-2.65	-0.44	-0.34	0.20	0.19
X-Rüzgar-%5	-2.86	0.46	0.53	0.05	0.04
Y-Rüzgar+%5	-13.76	1.05	1.04	0.34	0.43
Y-Rüzgar-%5	-13.46	-0.20	-0.19	0.56	0.64

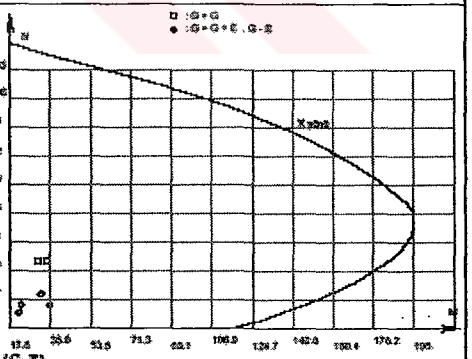

BETONARME :	X-(G+Q)	X-(G+Q+E)	Y-(G+Q)	Y-(G+Q+E)	X-(G-E)	Y-(G-E)
max. Nd (t) :	321.548	110.454	321.548	111.449	165.298	77.679
minor M (tm):	1.775	2.756	16.171	20.399	1.380	15.459
major M (tm):	16.199	17.413	12.540	4.955	13.462	3.609
fcd (kg/cm²):	200.000	200.000	200.000	200.000	200.000	200.000
μ :	0.0025	0.0025	0.0025	0.0025	0.0025	0.0025
As (cm²):	16.001	16.000	16.000	16.000	16.000	16.000

Cqa=0.600

DONATI :2x7ø20+2x5ø20 (govde) + ø10/20/10(etriye)

STAA-CAD V11

FİRMA : | 03-23-2005

PROJE : perdeli sistem (perdeli.ST4)

S1001 KOLONU
I/J :172/133 Bx/By :80/80 βx:1.000 βy:1.000 Hk :3.25 m
Material:E1 BS20 CS420 Güç.Kol. Cx:1.000 Cy:1.000

KOMBİNASYON	maxNd (t)	üstMx	altMx	üstMy	altMy (tm)
1.(G+G+G+G)	320.30	9.41	9.34	1.16	1.26
2.(Q+Q+Q+Q)	27.25	0.75	0.74	0.03	0.04
3.(o+Q+o+Q)	12.58	0.39	0.36	0.02	0.02
4.(Q+o+Q+o)	12.08	0.36	0.38	0.01	0.03
5.(Q+Q+o+Q)	16.68	0.51	0.61	0.04	0.04
6.(o+Q+Q+o)	17.32	0.60	0.49	0.01	0.02
7.(o+o+Q+Q)	17.32	0.30	0.39	0.01	0.04
Zemin itkisi	0.00	0.00	0.00	0.00	0.00
X-Deprem+%5	-52.31	-2.27	-1.03	1.45	1.49
X-Deprem-%5	-53.16	4.70	6.02	0.21	0.24
Y-Deprem+%5	-203.49	6.46	6.43	2.25	3.67
Y-Deprem-%5	-203.20	-1.89	-1.90	3.72	5.34
X-Rüzgar+%5	-6.91	-0.41	-0.22	0.26	0.26
X-Rüzgar-%5	-6.95	0.75	0.91	0.05	0.06
Y-Rüzgar+%5	-31.50	1.26	1.25	0.51	0.76
Y-Rüzgar-%5	-31.42	-0.26	-0.27	0.80	1.04

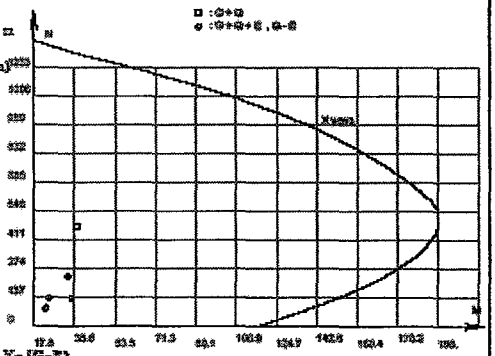

BETONARME :	X-(G+Q)	X-(G+Q+E)	Y-(G+Q)	Y-(G+Q+E)	X-(G-E)	Y-(G-E)
max. Nd (t) :	474.583	132.164	474.583	133.455	235.111	84.783
minor M (tm):	1.670	3.441	14.270	8.182	1.375	14.837
major M (tm):	18.509	16.620	18.509	6.640	14.431	5.001
fcd (kg/cm²):	200.000	200.000	200.000	200.000	200.000	200.000
μ :	0.0025	0.0025	0.0025	0.0025	0.0025	0.0025
As (cm²):	16.001	16.000	16.000	16.000	16.000	16.000

Cqa=0.600

DONATI :2x7ø20+2x5ø20 (govde) + ø10/20/10(etriye)

S501 KOLONU
I/J :28/14 Bx/By :80/80 βx:1.000 βy:1.000 Hk :3.25 m
Material:E1 BS20 CS420 Güç.Kol. Cx:1.000 Cy:1.000

KOMBİNASYON	maxNd (t)	üstMx	altMx	üstMy	altMy (tm)
1.(G+G+G+G)	372.09	7.90	7.76	0.99	1.10
2.(Q+Q+Q+Q)	31.61	0.63	0.62	0.02	0.03
3.(o+Q+o+Q)	14.98	0.31	0.32	0.00	0.03
4.(Q+o+Q+o)	14.80	0.33	0.30	0.02	0.01
5.(Q+Q+o+Q)	19.98	0.31	0.31	0.01	0.03
6.(o+Q+Q+o)	19.61	0.44	0.52	0.02	0.03
7.(o+o+Q+Q)	19.97	0.53	0.41	0.01	0.01
Zemin itkisi	0.00	0.00	0.00	0.00	0.00
X-Deprem+%5	-74.07	-1.00	0.64	1.40	1.59
X-Deprem-%5	-71.68	5.47	7.30	0.19	0.26
Y-Deprem+%5	-271.39	5.40	5.44	3.06	5.47
Y-Deprem-%5	-274.28	-2.25	-2.43	4.50	7.04
X-Rüzgar+%5	-10.62	-0.18	0.04	0.25	0.28
X-Rüzgar-%5	-10.23	0.89	1.14	0.05	0.06
Y-Rüzgar+%5	-45.46	1.07	1.07	0.67	1.08
Y-Rüzgar-%5	-46.01	-0.44	-0.47	0.95	1.39

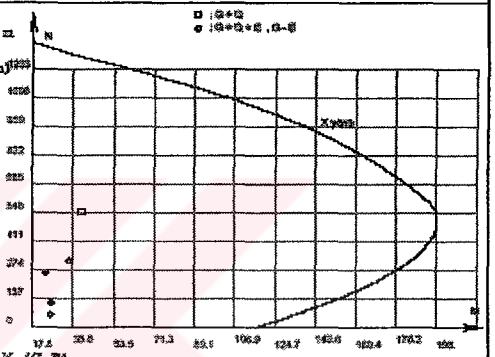

BETONARME :	X-(G+Q)	X-(G+Q+E)	Y-(G+Q)	Y-(G+Q+E)	X-(G-E)	Y-(G-E)
max. Nd (t) :	551.268	219.374	551.268	116.852	260.605	60.675
minor M (tm):	1.420	1.391	11.866	5.955	2.256	4.555
major M (tm):	21.499	15.687	21.499	8.167	6.109	8.023
fcd (kg/cm²):	200.000	200.000	200.000	200.000	200.000	200.000
μ :	0.0025	0.0025	0.0025	0.0025	0.0025	0.0025
As (cm²):	16.001	16.000	16.000	16.000	16.000	16.000

Cqa=0.600

DONATI :2x7ø20+2x5ø20 (govde) + ø10/20/10(etriye)

S101 KOLONU
I/J :1/ Bx/By :80/80 βx:1.000 βy:1.000 Hk :3.25 m
Material:E1 BS20 CS420 Güç.Kol. Cx:1.000 Cy:1.000

KOMBİNASYON	maxNd (t)	üstMx	altMx	üstMy	altMy (tm)
1.(G+G+G+G)	421.87	4.42	1.97	0.17	0.12
2.(Q+Q+Q+Q)	35.48	0.27	0.16	-0.02	0.00
3.(o+Q+o+Q)	16.80	0.16	0.07	-0.02	-0.01
4.(Q+o+Q+o)	16.66	0.20	0.09	0.00	0.00
5.(Q+Q+o+Q)	21.94	0.21	0.09	0.00	0.00
6.(o+Q+Q+o)	22.50	0.37	0.17	-0.01	0.00
7.(o+o+Q+Q)	22.47	0.15	0.07	-0.02	-0.01
Zemin itkisi	0.00	0.00	0.00	0.00	0.00
X-Deprem+%5	-99.23	0.04	3.36	1.01	1.64
X-Deprem-%5	-87.10	2.73	8.91	0.00	-0.07
Y-Deprem+%5	-361.02	1.63	2.40	3.57	8.57
Y-Deprem-%5	-375.40	-1.34	-3.19	4.78	10.60
X-Rüzgar+%5	-15.10	0.03	0.52	0.19	0.30
X-Rüzgar-%5	-13.07	0.48	1.45	0.01	0.01
Y-Rüzgar+%5	-64.00	0.27	0.68	0.80	1.74
Y-Rüzgar-%5	-66.86	-0.27	-0.64	1.04	2.15

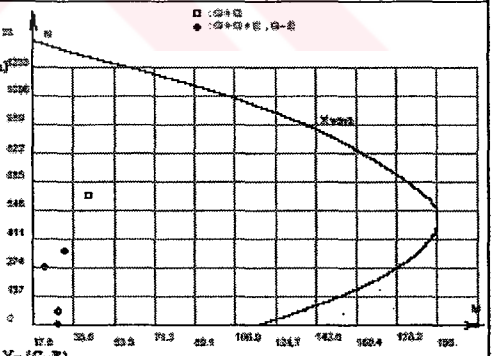

BETONARME :	X-(G+Q)	X-(G+Q+E)	Y-(G+Q)	Y-(G+Q+E)	X-(G-E)	Y-(G-E)
max. Nd (t) :	624.907	256.198	624.907	67.901	280.458	4.284
minor M (tm):	0.219	0.049	6.524	-1.123	1.749	-1.412
major M (tm):	24.371	13.892	24.371	10.721	5.126	10.706
fcd (kg/cm²):	200.000	200.000	200.000	200.000	200.000	200.000
μ :	0.0025	0.0025	0.0025	0.0025	0.0025	0.0025
As (cm²):	16.001	16.000	16.000	16.000	16.000	16.000

Cqa=0.604

DONATI :2x7ø20+2x5ø20 (govde) + ø10/20/10(etriye)

STAA-CAD V11

FİRMA : | 03-23-2005

PROJE : perdeli sistem (perdeli.ST4)

S4002 KOLONU
I/J :2647/2565 Bx/By :80/80 βx:1.000 βy:1.000 Hk :3.25 m
Material:E1 BS30 CS420 Güç.Kol. Cx:1.000 Cy:1.000

KOMBİNASYON	maxNd (t)	üstMx	altMx	üstMy	altMy (tm)
1.(G+G+G+G)	9.14	0.00	0.00	0.14	0.17
2.(Q+Q+Q+Q)	0.71	0.00	0.00	-0.06	-0.05
3.(o+Q+o+Q)	0.15	-0.15	0.08	-0.02	-0.03
4.(Q+o+Q+o)	0.52	0.15	-0.08	-0.03	-0.01
5.(Q+Q+o+Q)	0.19	-0.15	0.08	-0.04	-0.04
6.(o+Q+Q+o)	0.35	0.29	0.10	-0.04	-0.03
7.(o+o+Q+Q)	0.80	-0.14	-0.18	-0.02	-0.01
Zemin itkisi	0.00	0.00	0.00	0.00	0.00
X-Deprem+%5	0.00	-5.27	-4.31	0.00	0.00
X-Deprem-%5	0.00	-1.48	-1.32	0.00	0.00
Y-Deprem+%5	1.61	2.34	1.91	-0.56	-0.70
Y-Deprem-%5	1.61	-2.34	-1.91	-0.56	-0.70
X-Rüzgar+%5	0.00	-0.53	-0.44	0.00	0.00
X-Rüzgar-%5	0.00	-0.21	-0.18	0.00	0.00
Y-Rüzgar+%5	0.17	0.22	0.18	-0.06	-0.07
Y-Rüzgar-%5	0.17	-0.22	-0.18	-0.06	-0.07

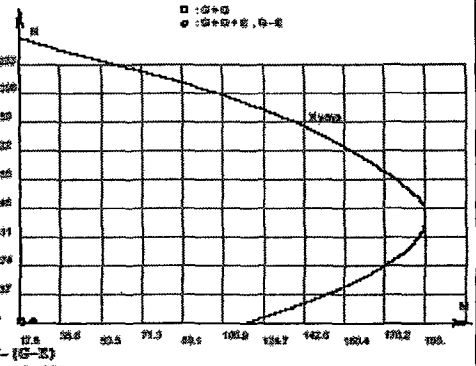

BETONARME :	X-(G+Q)	X-(G+Q+E)	Y-(G+Q)	Y-(G+Q+E)	X-(G-E)	Y-(G-E)
max. Nd (t) :	13.936	9.852	13.936	8.228	8.225	6.611
minor M (tm):	0.123	0.094	0.005	1.911	0.124	1.911
major M (tm):	0.543	5.664	0.543	0.874	5.278	0.857
fcd (kg/cm²):	200.000	200.000	200.000	200.000	200.000	200.000
μ :	0.0025	0.0025	0.0025	0.0025	0.0025	0.0025
As (cm²):	16.001	16.000	16.000	16.000	16.000	16.000

Cqz=1.000

DONATI :2x7ø20+2x5ø20 (govde) + ø10/20/10(etriye)

S3002 KOLONU
I/J :1618/1735 Bx/By :80/80 βx:1.000 βy:1.000 Hk :3.25 m
Material:E1 BS30 CS420 Güç.Kol. Cx:1.000 Cy:1.000

KOMBİNASYON	maxNd (t)	üstMx	altMx	üstMy	altMy (tm)
1.(G+G+G+G)	123.31	0.00	0.00	0.19	0.24
2.(Q+Q+Q+Q)	9.62	0.00	0.00	-0.04	-0.02
3.(o+Q+o+Q)	4.36	-0.10	0.10	-0.01	-0.02
4.(Q+o+Q+o)	4.78	0.10	-0.10	-0.02	-0.01
5.(Q+Q+o+Q)	5.81	0.18	0.06	-0.03	-0.02
6.(o+Q+Q+o)	6.36	-0.13	-0.18	-0.02	-0.01
7.(o+o+Q+Q)	5.93	-0.05	0.12	-0.02	-0.02
Zemin itkisi	0.00	0.00	0.00	0.00	0.00
X-Deprem+%5	0.00	-4.47	-4.05	0.00	0.00
X-Deprem-%5	0.00	1.57	1.91	0.00	0.00
Y-Deprem+%5	-48.47	3.58	3.54	1.32	1.68
Y-Deprem-%5	-48.47	-3.58	-3.54	1.32	1.68
X-Rüzgar+%5	0.00	-0.58	-0.55	0.00	0.00
X-Rüzgar-%5	0.00	0.06	0.07	0.00	0.00
Y-Rüzgar+%5	-3.13	0.45	0.44	0.16	0.15
Y-Rüzgar-%5	-3.13	-0.45	-0.44	0.16	0.15

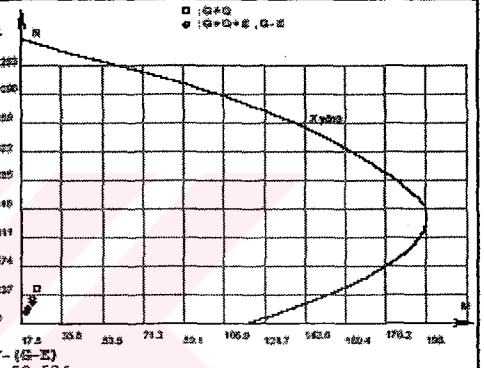

BETONARME :	X-(G+Q)	X-(G+Q+E)	Y-(G+Q)	Y-(G+Q+E)	X-(G-E)	Y-(G-E)
max. Nd (t) :	167.852	119.073	167.852	70.599	101.978	53.506
minor M (tm):	0.220	0.162	0.004	-3.540	0.175	3.546
major M (tm):	6.546	4.651	6.546	2.753	-4.464	1.891
fcd (kg/cm²):	200.000	200.000	200.000	200.000	200.000	200.000
μ :	0.0025	0.0025	0.0025	0.0025	0.0025	0.0025
As (cm²):	16.001	16.000	16.000	16.000	16.000	16.000

Cqz=0.599

DONATI :2x7ø20+2x5ø20 (govde) + ø10/20/10(etriye)

S2002 KOLONU
I/J :988/905 Bx/By :80/80 βx:1.000 βy:1.000 Hk :3.25 m
Material:E1 BS30 CS420 Güç.Kol. Cx:1.000 Cy:1.000

KOMBİNASYON	maxNd (t)	üstMx	altMx	üstMy	altMy (tm)
1.(G+G+G+G)	216.85	0.00	0.00	0.18	0.26
2.(Q+Q+Q+Q)	18.44	0.00	0.00	-0.04	-0.03
3.(o+Q+o+Q)	8.51	-0.10	0.10	-0.01	-0.02
4.(Q+o+Q+o)	8.85	0.10	-0.10	-0.02	-0.01
5.(Q+Q+o+Q)	11.75	-0.13	-0.18	-0.02	-0.01
6.(o+Q+Q+o)	11.56	-0.05	0.12	-0.02	-0.02
7.(o+o+Q+Q)	11.43	0.18	0.06	-0.03	-0.02
Zemin itkisi	0.00	0.00	0.00	0.00	0.00
X-Deprem+%5	0.00	-6.16	-5.29	0.00	0.00
X-Deprem-%5	0.00	1.21	2.02	0.00	0.00
Y-Deprem+%5	-117.37	4.38	4.35	0.98	1.91
Y-Deprem-%5	-117.37	-4.38	-4.35	0.98	1.91
X-Rüzgar+%5	0.00	-0.95	-0.86	0.00	0.00
X-Rüzgar-%5	0.00	0.16	0.23	0.00	0.00
Y-Rüzgar+%5	-13.68	0.78	0.77	0.24	0.23
Y-Rüzgar-%5	-13.68	-0.78	-0.77	0.24	0.23

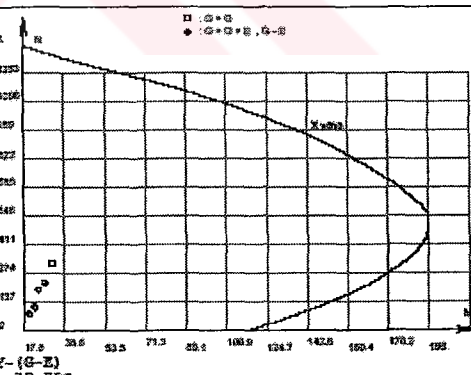

BETONARME :	X-(G+Q)	X-(G+Q+E)	Y-(G+Q)	Y-(G+Q+E)	X-(G-E)	Y-(G-E)
max. Nd (t) :	321.291	227.915	321.291	110.547	195.162	77.798
minor M (tm):	0.201	0.149	0.004	4.351	0.165	4.351
major M (tm):	12.530	8.889	12.530	4.311	-6.156	2.137
fcd (kg/cm²):	200.000	200.000	200.000	200.000	200.000	200.000
μ :	0.0025	0.0025	0.0025	0.0025	0.0025	0.0025
As (cm²):	16.001	16.000	16.000	16.000	16.000	16.000

Cqz=0.600

DONATI :2x7ø20+2x5ø20 (govde) + ø10/20/10(etriye)

ST4-GD V11

FİRMA : | 03-23-2005

PROJE : perdeli sistem (perdeli.ST4)

S1002 KOLONU
I/J :223/174 Bx/By :80/80 βx:1.000 βy:1.000 Hk :3.25 m
Material:E1 BS20 CS420 Güç.Kol. Cx:1.000 Cy:1.000

KOMBİNASYON	maxNd (t)	üstMx	altMx	üstMy	altMy (tm)
1.(G+G+G+G)	319.66	0.00	0.00	0.22	0.23
2.(Q+Q+Q+Q)	27.19	0.00	0.00	-0.04	-0.02
3.(o+Q+o+Q)	12.63	-0.10	0.10	-0.01	-0.02
4.(Q+o+Q+o)	12.97	0.10	-0.10	-0.02	-0.01
5.(Q+Q+o+Q)	16.89	-0.05	0.12	-0.02	-0.02
6.(o+Q+Q+o)	17.00	0.10	0.06	-0.03	-0.02
7.(o+o+Q+Q)	17.33	-0.13	-0.18	-0.02	-0.01
Zemin itkisi	0.00	0.00	0.00	0.00	0.00
X-Deprem+%5	0.00	-5.81	-4.46	0.00	0.00
X-Deprem-%5	0.00	2.96	4.29	0.00	0.00
Y-Deprem+%5	-204.15	5.18	5.17	1.53	3.13
Y-Deprem-%5	-204.15	-5.18	-5.17	1.53	3.13
X-Rüzgar+%5	0.00	-1.00	-0.82	0.00	0.00
X-Rüzgar-%5	0.00	0.43	0.69	0.00	0.00
Y-Rüzgar+%5	-31.62	1.01	1.00	0.36	0.60
Y-Rüzgar-%5	-31.62	-1.01	-1.00	0.36	0.60

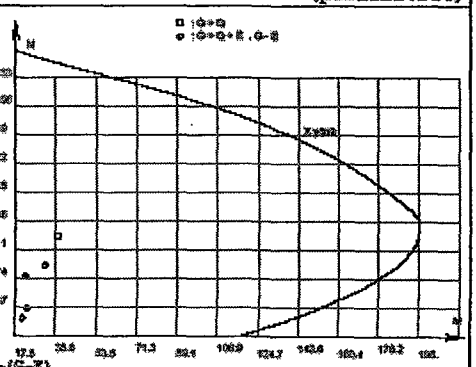

BETONARME :	X-(G+Q)	X-(G+Q+E)	Y-(G+Q)	Y-(G+Q+E)	X-(G-E)	Y-(G-E)
max. Nd (t) :	473.582	335.947	473.582	131.794	287.690	83.539
minor M (tm):	0.262	0.192	0.004	-5.168	0.299	5.177
major M (tm):	18.470	13.102	18.470	5.140	4.293	3.425
fcd (kg/cm²):	200.000	200.000	200.000	200.000	200.000	200.000
μ :	0.0025	0.0025	0.0025	0.0025	0.0025	0.0025
As (cm²):	16.001	16.000	16.000	16.000	16.000	16.000

Cqa=0.599

DONATI :2x7ø20+2x5ø20 (gövde) + ø10/20/10(etriye)

S502 KOLONU
I/J :48/29 Bx/By :80/80 βx:1.000 βy:1.000 Hk :3.25 m
Material:E1 BS20 CS420 Güç.Kol. Cx:1.000 Cy:1.000

KOMBİNASYON	maxNd (t)	üstMx	altMx	üstMy	altMy (tm)
1.(G+G+G+G)	270.12	0.00	0.00	0.25	0.35
2.(Q+Q+Q+Q)	31.45	0.00	0.00	-0.03	-0.02
3.(o+Q+o+Q)	14.84	0.10	-0.10	-0.02	0.00
4.(Q+o+Q+o)	14.78	-0.10	0.10	-0.01	-0.01
5.(Q+Q+o+Q)	19.90	-0.13	-0.18	-0.02	0.00
6.(o+Q+Q+o)	19.73	-0.05	0.12	-0.01	-0.01
7.(o+o+Q+Q)	19.60	0.18	0.06	-0.03	-0.01
Zemin itkisi	0.00	0.00	0.00	0.00	0.00
X-Deprem+%5	0.00	-3.44	-1.72	0.00	0.00
X-Deprem-%5	0.00	4.57	6.45	0.00	0.00
Y-Deprem+%5	-272.14	4.75	4.84	2.21	4.70
Y-Deprem-%5	-272.14	-4.74	-4.83	2.21	4.70
X-Rüzgar+%5	0.00	-0.61	-0.27	0.00	0.00
X-Rüzgar-%5	0.00	0.71	0.97	0.00	0.00
Y-Rüzgar+%5	-45.60	0.93	0.95	0.49	0.92
Y-Rüzgar-%5	-45.59	-0.93	-0.95	0.49	0.92

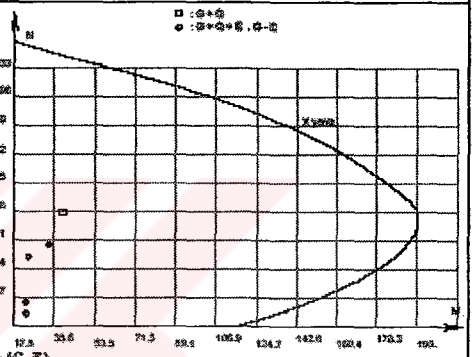

BETONARME :	X-(G+Q)	X-(G+Q+E)	Y-(G+Q)	Y-(G+Q+E)	X-(G-E)	Y-(G-E)
max. Nd (t) :	548.317	288.966	548.317	116.825	233.112	60.975
minor M (tm):	0.309	0.385	0.004	-4.820	0.347	4.839
major M (tm):	21.384	15.170	21.384	5.089	6.457	5.050
fcd (kg/cm²):	200.000	200.000	200.000	200.000	200.000	200.000
μ :	0.0025	0.0025	0.0025	0.0025	0.0025	0.0025
As (cm²):	16.001	16.000	16.000	16.000	16.000	16.000

Cqa=0.599

DONATI :2x7ø20+2x5ø20 (gövde) + ø10/20/10(etriye)

S102 KOLONU
I/J :2/ Bx/By :80/80 βx:1.000 βy:1.000 Hk :3.25 m
Material:E1 BS20 CS420 Güç.Kol. Cx:1.000 Cy:1.000

KOMBİNASYON	maxNd (t)	üstMx	altMx	üstMy	altMy (tm)
1.(G+G+G+G)	413.21	0.00	0.00	-0.04	0.03
2.(Q+Q+Q+Q)	34.82	0.00	0.00	-0.03	-0.01
3.(o+Q+o+Q)	16.42	0.17	0.08	-0.02	-0.01
4.(Q+o+Q+o)	16.39	-0.17	-0.08	-0.01	0.00
5.(Q+Q+o+Q)	21.86	-0.11	-0.05	-0.01	0.00
6.(o+Q+Q+o)	21.86	0.18	0.08	-0.03	-0.01
7.(o+o+Q+Q)	22.11	-0.07	-0.03	-0.02	-0.01
Zemin itkisi	0.00	0.00	0.00	0.00	0.00
X-Deprem+%5	0.00	-0.28	3.11	0.00	0.00
X-Deprem-%5	0.00	2.98	8.78	0.00	0.00
Y-Deprem+%5	-364.57	1.93	3.37	3.68	9.37
Y-Deprem-%5	-364.57	-1.93	-3.37	3.68	9.37
X-Rüzgar+%5	0.00	-0.03	0.47	0.00	0.00
X-Rüzgar-%5	0.00	0.52	1.43	0.00	0.00
Y-Rüzgar+%5	-64.67	0.39	0.67	0.82	1.90
Y-Rüzgar-%5	-64.67	-0.39	-0.67	0.82	1.90

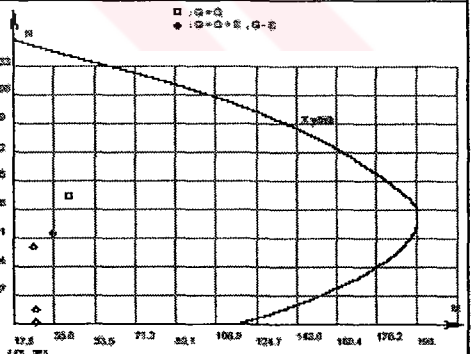

BETONARME :	X-(G+Q)	X-(G+Q+E)	Y-(G+Q)	Y-(G+Q+E)	X-(G-E)	Y-(G-E)
max. Nd (t) :	611.919	434.099	611.919	89.526	271.889	7.316
minor M (tm):	-0.084	0.018	0.003	-3.364	0.024	3.369
major M (tm):	23.865	16.930	-23.865	9.393	8.780	9.390
fcd (kg/cm²):	200.000	200.000	200.000	200.000	200.000	200.000
μ :	0.0025	0.0025	0.0025	0.0025	0.0025	0.0025
As (cm²):	16.001	16.000	16.000	16.000	16.000	16.000

Cqa=0.600

DONATI :2x7ø20+2x5ø20 (gövde) + ø10/20/10(etriye)

STRAD V11

FİRMA :

03-23-2005

PROJE : perdeli sistem

(perdeli.ST4)

S4003 KOLONU

I/J :2729/2650 Bx/By :80/80 βx:1.000 βy:1.000 Hk :3.25 m

Material:Z1 B30 CS420 Güç.Kol. Cx:1.000 Cy:1.000

KOMBİNASYON	maxNd (t)	üstMx	altMx	üstMy	altMy (tm)
1.(G+G+G+G)	12.46	-17.23	-13.50	1.67	1.56
2.(Q+Q+Q+Q)	1.00	-1.38	-1.07	0.06	0.06
3.(o+Q+o+Q)	0.55	-0.79	-0.52	0.05	0.03
4.(Q+o+Q+o)	0.40	-0.60	-0.56	0.02	0.03
5.(Q+Q+o+Q)	0.64	-1.24	-1.19	0.06	0.04
6.(o+Q+Q+o)	0.79	-1.34	-0.49	0.02	0.02
7.(o+o+Q+Q)	0.47	-0.20	-0.47	0.03	0.05
Zemin itkisi	0.00	0.00	0.00	0.00	0.00
X-Deprem+%5	-1.31	-2.44	-2.11	-0.51	-0.45
X-Deprem-%5	-0.25	0.73	0.37	-0.14	-0.14
Y-Deprem+%5	1.63	-0.68	-0.60	0.26	0.05
Y-Deprem-%5	2.36	-4.48	-3.58	-0.19	-0.32
X-Rüzgar+%5	-0.14	-0.28	-0.23	-0.05	-0.04
X-Rüzgar-%5	-0.05	-0.02	-0.02	-0.01	-0.01
Y-Rüzgar+%5	0.34	-0.10	-0.09	0.00	-0.01
Y-Rüzgar-%5	0.22	-0.46	-0.37	-0.04	-0.05

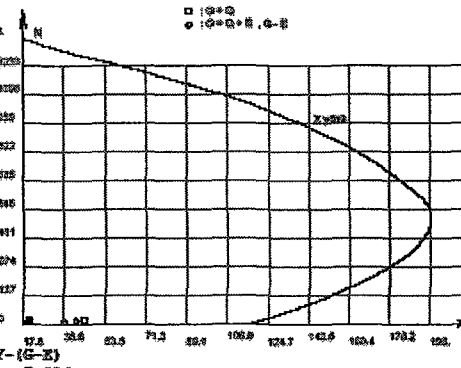

BETONARME :	X-(G+Q)	X-(G+Q+E)	Y-(G+Q)	Y-(G+Q+E)	X-(G-E)	Y-(G-E)
max. Nd (t) :	19.033	15.810	19.033	14.766	9.896	7.584
minor M (tm):	2.439	1.540	-26.251	-16.132	0.993	-14.925
major M (tm):	-26.482	-23.196	2.443	2.246	-18.042	1.248
fcd (kg/cm²):	200.000	200.000	200.000	200.000	200.000	200.000
μ :	0.0025	0.0025	0.0025	0.0025	0.0025	0.0025
As (cm²):	16.001	16.000	16.000	16.000	16.000	16.000

Cqa=1.000

DONATI :2x7ø20+2x5ø20 (govde) + ø10/20/10(etriye)

S3003 KOLONU

I/J :1904/1821 Bx/By :80/80 βx:1.000 βy:1.000 Hk :3.25 m

Material:Z1 B30 CS420 Güç.Kol. Cx:1.000 Cy:1.000

KOMBİNASYON	maxNd (t)	üstMx	altMx	üstMy	altMy (tm)
1.(G+G+G+G)	113.36	-10.97	-10.96	1.28	1.32
2.(Q+Q+Q+Q)	9.82	-0.87	-0.87	0.04	0.05
3.(o+Q+o+Q)	4.51	-0.48	-0.39	0.03	0.02
4.(Q+o+Q+o)	4.55	-0.39	-0.48	0.02	0.03
5.(Q+Q+o+Q)	6.08	-0.68	-0.24	0.02	0.02
6.(o+Q+Q+o)	6.01	-0.11	-0.44	0.03	0.05
7.(o+o+Q+Q)	6.03	-0.95	-1.06	0.04	0.02
Zemin itkisi	0.00	0.00	0.00	0.00	0.00
X-Deprem+%5	11.42	-1.68	-1.23	-1.06	-1.02
X-Deprem-%5	12.24	3.15	3.52	-0.21	-0.20
Y-Deprem+%5	-47.85	0.69	0.64	2.85	3.19
Y-Deprem-%5	-48.85	-5.04	-5.01	1.84	2.22
X-Rüzgar+%5	0.39	-0.26	-0.22	-0.12	-0.11
X-Rüzgar-%5	0.59	0.25	0.26	-0.03	-0.02
Y-Rüzgar+%5	-2.95	0.08	0.06	0.34	0.33
Y-Rüzgar-%5	-3.25	-0.65	-0.64	0.21	0.22

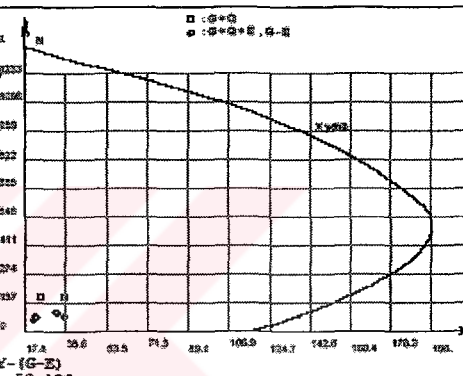

BETONARME :	X-(G+Q)	X-(G+Q+E)	Y-(G+Q)	Y-(G+Q+E)	X-(G-E)	Y-(G-E)
max. Nd (t) :	167.994	70.321	167.994	71.281	89.785	53.183
minor M (tm):	1.896	3.570	-16.734	-11.193	1.384	-14.874
major M (tm):	-17.045	-17.031	6.552	4.559	-13.356	2.407
fcd (kg/cm²):	200.000	200.000	200.000	200.000	200.000	200.000
μ :	0.0025	0.0025	0.0025	0.0025	0.0025	0.0025
As (cm²):	16.001	16.000	16.000	16.000	16.000	16.000

Cqa=0.603

DONATI :2x7ø20+2x5ø20 (govde) + ø10/20/10(etriye)

S2003 KOLONU

I/J :1074/991 Bx/By :80/80 βx:1.000 βy:1.000 Hk :3.25 m

Material:Z1 B30 CS420 Güç.Kol. Cx:1.000 Cy:1.000

KOMBİNASYON	maxNd (t)	üstMx	altMx	üstMy	altMy (tm)
1.(G+G+G+G)	217.00	-10.61	-10.59	1.23	1.20
2.(Q+Q+Q+Q)	18.45	-0.84	-0.84	0.03	0.04
3.(o+Q+o+Q)	8.67	-0.47	-0.38	0.02	0.02
4.(Q+o+Q+o)	8.71	-0.38	-0.47	0.01	0.03
5.(Q+Q+o+Q)	11.42	-0.09	-0.42	0.02	0.04
6.(o+Q+Q+o)	11.65	-0.94	-1.05	0.04	0.03
7.(o+o+Q+Q)	11.68	-0.66	-0.22	0.01	0.02
Zemin itkisi	0.00	0.00	0.00	0.00	0.00
X-Deprem+%5	29.17	-2.82	-1.92	-1.22	-1.19
X-Deprem-%5	30.02	3.09	3.53	-0.21	-0.21
Y-Deprem+%5	-116.65	1.08	1.03	2.70	3.61
Y-Deprem-%5	-117.64	-5.96	-5.92	1.49	2.44
X-Rüzgar+%5	2.65	-0.44	-0.34	-0.20	-0.19
X-Rüzgar-%5	2.86	0.46	0.53	-0.05	-0.04
Y-Rüzgar+%5	-13.46	0.20	0.19	0.56	0.64
Y-Rüzgar-%5	-13.76	-1.05	-1.04	0.34	0.43

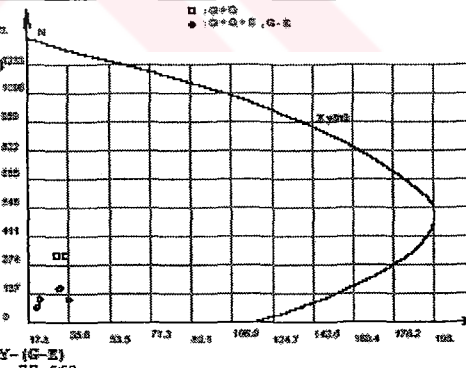

BETONARME :	X-(G+Q)	X-(G+Q+E)	Y-(G+Q)	Y-(G+Q+E)	X-(G-E)	Y-(G-E)
max. Nd (t) :	321.518	110.423	321.518	111.426	165.255	77.662
minor M (tm):	1.869	3.770	-16.164	-10.392	1.380	-15.454
major M (tm):	-16.499	-17.559	12.539	4.956	-13.459	3.610
fcd (kg/cm²):	200.000	200.000	200.000	200.000	200.000	200.000
μ :	0.0025	0.0025	0.0025	0.0025	0.0025	0.0025
As (cm²):	16.001	16.000	16.000	16.000	16.000	16.000

Cqa=0.600

DONATI :2x7ø20+2x5ø20 (govde) + ø10/20/10(etriye)

STAA-CAD V11

FİRMA :

03-23-2005

PROJE : perdeli sistem

(perdeli.ST4)

S1003 KOLONU
I/J :282/226 Bx/By :80/80 βx:1.000 βy:1.000 Hk :3.25 m
Material:E1 BS30 CS420 Güç.Kol. Cx:1.000 Cy:1.000

KOMBİNASYON	maxNd (t)	üstMx	altMx	üstMy	altMy (tm)
1.(G+G+G+G)	320.28	-9.40	-9.24	1.16	1.26
2.(Q+Q+Q+Q)	27.25	-0.75	-0.74	0.03	0.04
3.(o+Q+o+Q)	12.81	-0.42	-0.32	0.02	0.02
4.(Q+o+Q+o)	12.85	-0.22	-0.42	0.01	0.03
5.(Q+Q+o+Q)	17.02	-0.87	-0.98	0.03	0.03
6.(o+Q+Q+o)	17.28	-0.60	-0.16	0.01	0.02
7.(o+o+Q+Q)	17.02	-0.03	-0.35	0.02	0.04
Zemin itkisi	0.00	0.00	0.00	0.00	0.00
X-Deprem+%5	52.91	-2.37	-1.03	-1.45	-1.49
X-Deprem-%5	53.16	4.70	6.02	-0.21	-0.24
Y-Deprem+%5	-203.20	1.89	1.91	3.72	5.24
Y-Deprem-%5	-203.49	-6.46	-6.43	2.26	3.87
X-Rüzgar+%5	6.91	-0.41	-0.22	-0.26	-0.26
X-Rüzgar-%5	6.96	0.75	0.91	-0.05	-0.06
Y-Rüzgar+%5	-31.43	0.37	0.37	0.80	1.04
Y-Rüzgar-%5	-31.50	-1.26	-1.25	0.51	0.76

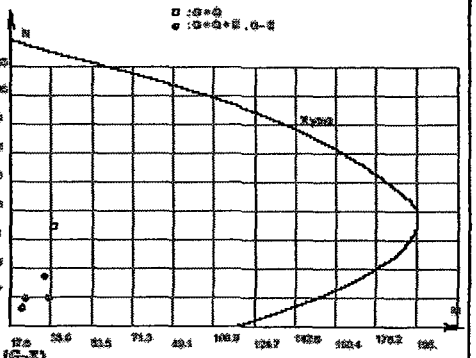

BETONARME :	X-(G+Q)	X-(G+Q+E)	Y-(G+Q)	Y-(G+Q+E)	X-(G-E)	Y-(G-E)
max. Nd (t) :	474.555	133.143	474.555	133.423	235.100	84.767
minor M (tm):	1.809	5.157	-14.261	-8.172	1.375	-14.830
major M (tm):	-18.508	-16.745	18.508	6.641	-14.426	5.002
fcd (kg/cm²):	200.000	200.000	200.000	200.000	200.000	200.000
μ :	0.0025	0.0025	0.0025	0.0025	0.0025	0.0025
As (cm²):	16.001	16.000	16.000	16.000	16.000	16.000

Cqa=0.600

DONATI :2x7ø20+2x5ø20 (gövde) + ø10/20/10(etriye)

S503 KOLONU
I/J :75/51 Bx/By :80/80 βx:1.000 βy:1.000 Hk :3.25 m
Material:E1 BS30 CS420 Güç.Kol. Cx:1.000 Cy:1.000

KOMBİNASYON	maxNd (t)	üstMx	altMx	üstMy	altMy (tm)
1.(G+G+G+G)	372.07	-7.89	-7.76	0.99	1.10
2.(Q+Q+Q+Q)	31.61	-0.63	-0.62	0.02	0.03
3.(o+Q+o+Q)	14.79	-0.27	-0.26	0.01	0.02
4.(Q+o+Q+o)	14.99	-0.26	-0.27	0.01	0.01
5.(Q+Q+o+Q)	19.67	0.05	-0.27	0.01	0.04
6.(o+Q+Q+o)	19.92	-0.80	-0.90	0.03	0.02
7.(o+o+Q+Q)	19.96	-0.52	-0.07	0.00	0.01
Zemin itkisi	0.00	0.00	0.00	0.00	0.00
X-Deprem+%5	74.07	-1.00	0.64	-1.40	-1.59
X-Deprem-%5	71.68	5.47	7.20	-0.19	-0.26
Y-Deprem+%5	-274.20	2.25	2.43	4.50	7.04
Y-Deprem-%5	-271.39	-5.40	-5.44	3.06	5.47
X-Rüzgar+%5	10.62	-0.18	0.04	-0.25	-0.28
X-Rüzgar-%5	10.23	0.89	1.14	-0.05	-0.06
Y-Rüzgar+%5	-46.01	0.44	0.47	0.95	1.29
Y-Rüzgar-%5	-45.46	-1.07	-1.07	0.67	1.08

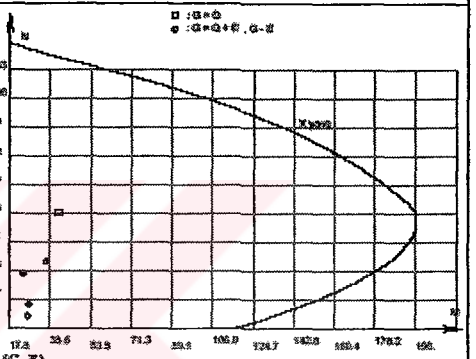

BETONARME :	X-(G+Q)	X-(G+Q+E)	Y-(G+Q)	Y-(G+Q+E)	X-(G-E)	Y-(G-E)
max. Nd (t) :	551.241	319.359	551.241	116.830	260.794	60.658
minor M (tm):	1.433	1.380	-11.234	-5.594	2.257	-4.547
major M (tm):	-21.498	-15.960	21.498	8.171	-6.104	8.024
fcd (kg/cm²):	200.000	200.000	200.000	200.000	200.000	200.000
μ :	0.0025	0.0025	0.0025	0.0025	0.0025	0.0025
As (cm²):	16.001	16.000	16.000	16.000	16.000	16.000

Cqa=0.600

DONATI :2x7ø20+2x5ø20 (gövde) + ø10/20/10(etriye)

S103 KOLONU
I/J :10/ Bx/By :80/80 βx:1.000 βy:1.000 Hk :3.25 m
Material:E1 BS30 CS420 Güç.Kol. Cx:1.000 Cy:1.000

KOMBİNASYON	maxNd (t)	üstMx	altMx	üstMy	altMy (tm)
1.(G+G+G+G)	421.85	-4.42	-1.97	0.17	0.12
2.(Q+Q+Q+Q)	35.47	-0.36	-0.16	-0.02	0.00
3.(o+Q+o+Q)	16.65	-0.11	-0.05	-0.01	0.00
4.(Q+o+Q+o)	16.80	-0.25	-0.11	0.00	0.00
5.(Q+Q+o+Q)	22.23	-0.48	-0.21	0.01	0.01
6.(o+Q+Q+o)	22.41	-0.51	-0.23	-0.02	0.00
7.(o+o+Q+Q)	22.26	0.26	0.12	-0.02	-0.01
Zemin itkisi	0.00	0.00	0.00	0.00	0.00
X-Deprem+%5	99.23	0.04	3.36	-1.01	-1.64
X-Deprem-%5	87.18	2.71	8.91	0.00	0.87
Y-Deprem+%5	-375.41	1.24	3.19	4.79	10.60
Y-Deprem-%5	-361.03	-1.83	-3.40	3.57	8.57
X-Rüzgar+%5	15.10	0.02	0.52	-0.19	-0.20
X-Rüzgar-%5	13.07	0.48	1.45	-0.01	-0.01
Y-Rüzgar+%5	-66.96	0.27	0.64	1.04	2.15
Y-Rüzgar-%5	-64.00	-0.37	-0.68	0.80	1.74

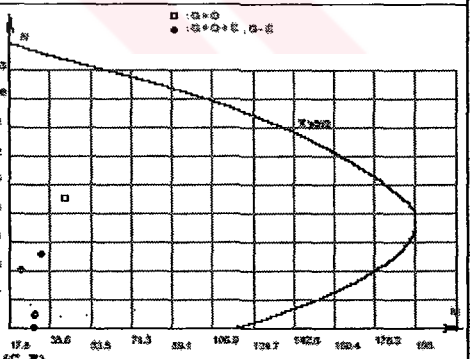

BETONARME :	X-(G+Q)	X-(G+Q+E)	Y-(G+Q)	Y-(G+Q+E)	X-(G-E)	Y-(G-E)
max. Nd (t) :	624.872	356.177	624.872	67.569	280.435	4.258
minor M (tm):	0.213	0.047	-6.961	1.006	1.750	1.417
major M (tm):	-24.370	13.891	24.370	10.724	-5.123	10.707
fcd (kg/cm²):	200.000	200.000	200.000	200.000	200.000	200.000
μ :	0.0025	0.0025	0.0025	0.0025	0.0025	0.0025
As (cm²):	16.001	16.000	16.000	16.000	16.000	16.000

Cqa=0.604

DONATI :2x7ø20+2x5ø20 (gövde) + ø10/20/10(etriye)

STAA-PAD V11

FİRMA : | 03-23-2005

PROJE : perdeli sistem (perdeli.ST4)

P107 PANELI
I/K:13/0 Io/Jo:26/0 J/L:24/ Bx/By :370.5/50. Hk :3.25 m

KOMBİNASYON	maxNd	üstMx	altMx	üstMy	altMy	Tx	Ty
1.(G+G+G+G)	1196.47	3.64	-1.26	-0.09	0.01	0.72	-0.02
2.(Q+Q+Q+Q)	102.59	0.15	-0.05	-0.01	0.00	0.03	0.00
3.(o+Q+o+Q)	48.42	0.11	-0.02	0.00	0.00	0.02	0.00
4.(Q+o+Q+o)	48.29	0.02	-0.02	-0.01	0.00	0.00	0.00
5.(Q+Q+o+Q)	63.63	0.03	-0.01	-0.01	0.00	0.01	0.00
6.(o+Q+Q+o)	64.63	0.19	-0.10	-0.01	0.00	0.03	0.00
7.(o+o+Q+Q)	64.96	0.04	0.02	-0.01	0.00	0.02	0.00
Zemin itkisi	0.00	0.00	0.00	0.00	0.00	0.00	0.00
X-Deprem+%5	117.29	-109.69	250.03	-0.07	0.66	43.18	0.18
X-Deprem-%5	125.58	-109.06	378.44	-0.02	-0.05	82.89	-0.02
Y-Deprem+%5	549.35	-28.09	86.21	-1.35	7.86	17.68	2.09
Y-Deprem-%5	539.56	-28.89	-66.19	-1.40	8.70	-29.23	2.25
X-Rüzgar+%5	17.11	-15.37	39.38	-0.01	0.12	7.39	0.03
X-Rüzgar-%5	18.47	-15.17	60.91	0.00	0.00	14.08	0.00
Y-Rüzgar+%5	92.18	-5.73	17.24	-0.22	1.59	3.54	0.42
Y-Rüzgar-%5	90.28	-6.02	-13.12	-0.23	1.75	-5.89	0.47

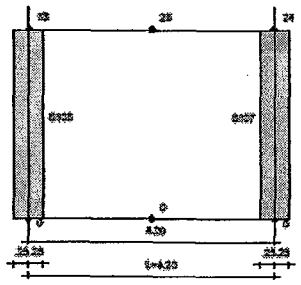

Material:M1 BS30 CS420 (t,m)

BETONARME :	X-(G+Q)	X-(G+Q+E)	Y-(G+Q)	Y-(G+Q+E)
max. Nd (t) :	1839.204	1173.521	1839.204	1838.624
max. M (tm):	45.980	-379.801	45.980	45.966
fcd (kg/cm²):	200.000	200.000	200.000	200.000
μ :	0.0010	0.0010	0.0013	0.0013
As (cm²):	18.525	13.525	23.156	23.156

DONATI :2x14ø16 (düşey) + ø12/15 (yatay)

P108 PANELI
I/K:24/0 Io/Jo:44/0 J/L:43/ Bx/By :370.5/50. Hk :3.25 m

KOMBİNASYON	maxNd	üstMx	altMx	üstMy	altMy	Tx	Ty
1.(G+G+G+G)	1196.45	-3.61	1.26	-0.09	0.01	-0.72	-0.02
2.(Q+Q+Q+Q)	102.57	-0.13	0.05	-0.01	0.00	-0.03	0.00
3.(o+Q+o+Q)	48.09	-0.05	0.02	0.00	0.00	-0.01	0.00
4.(Q+o+Q+o)	48.60	-0.07	0.01	-0.01	0.00	-0.02	0.00
5.(Q+Q+o+Q)	64.26	-0.15	0.06	-0.01	0.00	-0.03	0.00
6.(o+Q+Q+o)	64.20	-0.13	0.01	-0.01	0.00	-0.04	0.00
7.(o+o+Q+Q)	64.82	0.04	0.02	-0.01	0.00	0.02	0.00
Zemin itkisi	0.00	0.00	0.00	0.00	0.00	0.00	0.00
X-Deprem+%5	117.27	-109.69	250.03	0.07	-0.66	43.18	-0.18
X-Deprem-%5	125.52	-109.06	378.44	0.02	0.05	82.89	0.02
Y-Deprem+%5	539.56	28.89	66.22	-1.40	8.70	29.27	2.25
Y-Deprem-%5	549.35	28.09	-86.17	-1.35	7.86	-17.87	2.08
X-Rüzgar+%5	17.11	-15.37	39.38	0.01	-0.12	7.39	-0.03
X-Rüzgar-%5	18.46	-15.17	60.91	0.00	0.00	14.08	0.00
Y-Rüzgar+%5	90.28	6.02	12.12	-0.23	1.75	5.89	0.47
Y-Rüzgar-%5	92.18	5.73	-17.24	-0.22	1.59	-3.54	0.42

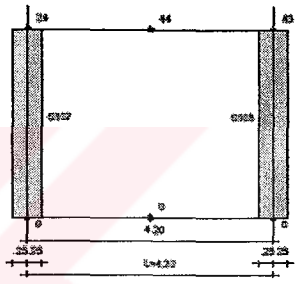

Material:M1 BS30 CS420 (t,m)

BETONARME :	X-(G+Q)	X-(G+Q+E)	Y-(G+Q)	Y-(G+Q+E)
max. Nd (t) :	1839.146	1424.542	1839.146	1838.586
max. M (tm):	45.979	279.779	45.979	45.965
fcd (kg/cm²):	200.000	200.000	200.000	200.000
μ :	0.0010	0.0010	0.0013	0.0013
As (cm²):	18.525	18.525	23.156	23.156

DONATI :2x14ø16 (düşey) + ø12/15 (yatay)

P109 PANELI
I/K:97/0 Io/Jo:68/0 J/L:45/ Bx/By :286./50. Hk :3.25 m

KOMBİNASYON	maxNd	üstMx	altMx	üstMy	altMy	Tx	Ty
1.(G+G+G+G)	974.88	0.61	-0.15	-0.07	0.01	0.14	-0.02
2.(Q+Q+Q+Q)	85.07	-0.41	0.10	-0.01	0.00	-0.09	0.00
3.(o+Q+o+Q)	40.12	0.48	-0.11	0.00	0.00	0.11	0.00
4.(Q+o+Q+o)	40.31	-0.82	0.20	0.00	0.00	-0.19	0.00
5.(Q+Q+o+Q)	53.20	-0.93	0.24	0.00	0.00	-0.21	0.00
6.(o+Q+Q+o)	53.51	0.52	-0.16	-0.01	0.00	0.11	0.00
7.(o+o+Q+Q)	54.16	-0.28	0.09	-0.01	0.00	-0.06	0.00
Zemin itkisi	0.00	0.00	0.00	0.00	0.00	0.00	0.00
X-Deprem+%5	511.41	-79.85	211.11	-0.32	3.18	40.39	0.88
X-Deprem-%5	576.59	-89.13	288.64	-0.12	-0.24	61.39	-0.11
Y-Deprem+%5	317.27	-3.28	45.45	-0.94	4.33	12.38	1.04
Y-Deprem-%5	240.09	7.68	-46.56	-1.17	8.40	-11.86	2.22
X-Rüzgar+%5	72.92	-11.27	34.06	-0.05	0.59	7.01	0.16
X-Rüzgar-%5	83.51	-12.74	47.06	-0.02	0.01	10.56	0.00
Y-Rüzgar+%5	52.61	-0.60	9.05	-0.15	0.88	2.60	0.22
Y-Rüzgar-%5	37.68	1.47	-9.27	-0.19	1.69	-2.40	0.46

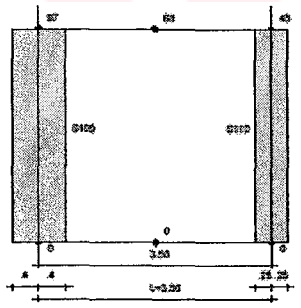

Material:M1 BS30 CS420 (t,m)

BETONARME :	X-(G+Q)	X-(G+Q+E)	Y-(G+Q)	Y-(G+Q+E)
max. Nd (t) :	1500.965	483.377	1500.965	1300.051
max. M (tm):	37.524	-285.947	37.524	32.501
fcd (kg/cm²):	200.000	200.000	200.000	200.000
μ :	0.0025	0.0025	0.0025	0.0025
As (cm²):	35.625	35.625	35.625	35.625

DONATI :2x11ø16 (düşey) + ø12/15 (yatay)

STAA-CAD V11

FİRMA : | 03-23-2005

PROJE : perdeli sistem (perdeli.ST4)

P110 PANELI
I/K:45/0 Io/Jo:69/0 J/L:46/ Bx/By :684.5/50. Hk :3.25 m

KOMBINASYON	maxNd	üstMx	altMx	üstMy	altMy	Tx	Ty
1.(G+G+G+G)	2233.80	38.76	-28.79	-0.16	0.01	3.07	-0.05
2.(Q+Q+Q+Q)	195.39	3.92	-2.86	-0.02	0.00	0.39	-0.01
3.(o+Q+o+Q)	91.29	1.68	-1.11	-0.01	0.00	0.17	0.00
4.(Q+o+Q+o)	93.48	2.13	-1.46	-0.01	0.00	0.20	0.00
5.(Q+Q+o+Q)	123.47	2.59	-1.73	-0.01	0.00	0.26	0.00
6.(o+Q+Q+o)	122.54	2.17	-1.55	-0.01	0.00	0.19	0.00
7.(o+o+Q+Q)	123.54	2.86	-1.86	-0.02	0.00	0.30	-0.01
Zemin itkisi	0.00	0.00	0.00	0.00	0.00	0.00	0.00
X-Deprem+%5	652.88	-722.46	1049.01	-0.46	4.56	100.48	1.26
X-Deprem-%5	696.57	-899.06	1389.34	-0.17	-0.35	150.86	-0.16
Y-Deprem+%5	741.71	-61.55	172.74	-2.37	12.38	34.21	3.08
Y-Deprem-%5	691.16	147.72	-230.99	-2.70	18.20	-25.62	4.77
X-Rüzgar+%5	91.19	-107.94	164.62	-0.08	0.84	17.45	0.23
X-Rüzgar-%5	97.95	-137.07	221.44	-0.03	0.01	25.96	-0.01
Y-Rüzgar+%5	122.67	-11.82	34.15	-0.29	2.50	6.87	0.65
Y-Rüzgar-%5	113.14	29.25	-45.94	-0.45	3.67	-5.13	0.99

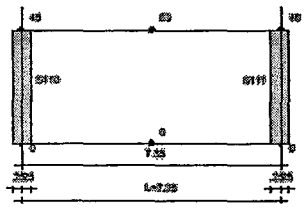

Material:E1 BS30 CS420 (t,m)

BETONARME :	X-(G+Q)	X-(G+Q+E)	Y-(G+Q)	Y-(G+Q+E)
max. Nd (t) :	3439.946	1782.619	3439.946	3128.354
max. M (tm) :	85.999	-1412.784	85.999	78.009
fcd (kg/cm²) :	200.000	200.000	200.000	200.000
ρ :	0.0010	0.0010	0.0012	0.0012
As (cm²) :	34.225	34.225	42.781	42.781

DONATI :2x27ø16 (düşey) + ø12/15 (yatay)

P111 PANELI
I/K:96/0 Io/Jo:127/0 J/L:95/ Bx/By :684.5/50. Hk :3.25 m

KOMBINASYON	maxNd	üstMx	altMx	üstMy	altMy	Tx	Ty
1.(G+G+G+G)	2233.73	-38.80	28.88	-0.16	0.01	-3.05	-0.05
2.(Q+Q+Q+Q)	195.34	-3.92	2.65	-0.02	0.00	-0.39	-0.01
3.(o+Q+o+Q)	92.96	-2.09	1.44	-0.01	0.00	-0.20	0.00
4.(Q+o+Q+o)	91.76	-1.70	1.13	-0.01	0.00	-0.18	0.00
5.(Q+Q+o+Q)	121.55	-2.24	1.53	-0.01	0.00	-0.22	0.00
6.(o+Q+Q+o)	123.46	-2.34	1.51	-0.01	0.00	-0.26	0.00
7.(o+o+Q+Q)	124.44	-3.02	2.10	-0.01	0.00	-0.28	0.00
Zemin itkisi	0.00	0.00	0.00	0.00	0.00	0.00	0.00
X-Deprem+%5	652.84	-722.46	1049.02	0.46	-4.56	100.48	-1.26
X-Deprem-%5	696.53	-899.06	1389.34	0.17	0.35	150.85	0.16
Y-Deprem+%5	691.17	-147.77	231.10	-2.71	18.20	25.64	4.77
Y-Deprem-%5	741.71	61.50	-172.63	-2.37	12.38	-34.19	3.08
X-Rüzgar+%5	91.18	-107.94	164.63	0.08	-0.84	17.45	-0.23
X-Rüzgar-%5	97.94	-137.07	221.44	0.03	-0.01	25.96	0.01
Y-Rüzgar+%5	113.14	-29.26	45.95	-0.45	3.67	5.14	0.99
Y-Rüzgar-%5	122.67	11.82	-34.14	-0.29	2.50	-6.87	0.65

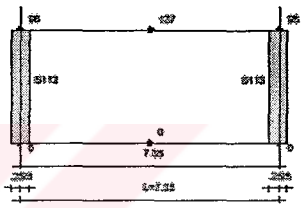

Material:E1 BS30 CS420 (t,m)

BETONARME :	X-(G+Q)	X-(G+Q+E)	Y-(G+Q)	Y-(G+Q+E)
max. Nd (t) :	3439.754	3125.589	3439.754	3128.224
max. M (tm) :	85.994	1412.864	85.994	78.006
fcd (kg/cm²) :	200.000	200.000	200.000	200.000
ρ :	0.0010	0.0010	0.0012	0.0012
As (cm²) :	34.225	34.225	42.781	42.781

DONATI :2x27ø16 (düşey) + ø12/15 (yatay)

P112 PANELI
I/K:95/0 Io/Jo:128/0 J/L:167/ Bx/By :285./50. Hk :3.25 m

KOMBINASYON	maxNd	üstMx	altMx	üstMy	altMy	Tx	Ty
1.(G+G+G+G)	574.68	-0.60	0.17	-0.07	0.01	-0.13	-0.02
2.(Q+Q+Q+Q)	85.05	0.41	-0.11	-0.01	0.00	0.09	0.00
3.(o+Q+o+Q)	40.45	0.46	-0.11	0.00	0.00	0.11	0.00
4.(Q+o+Q+o)	39.96	-0.11	0.02	-0.01	0.00	-0.02	0.00
5.(Q+Q+o+Q)	52.96	-0.22	0.06	-0.01	0.00	-0.05	0.00
6.(o+Q+Q+o)	53.50	0.39	-0.13	0.00	0.00	0.08	0.00
7.(o+o+Q+Q)	54.26	0.52	-0.12	-0.01	0.00	0.13	0.00
Zemin itkisi	0.00	0.00	0.00	0.00	0.00	0.00	0.00
X-Deprem+%5	511.39	-79.85	211.11	0.32	-3.19	40.39	-0.88
X-Deprem-%5	576.57	-89.14	288.64	0.12	0.24	61.39	0.11
Y-Deprem+%5	240.08	-7.68	46.56	-1.17	8.40	11.97	2.22
Y-Deprem-%5	317.27	3.28	-45.43	-0.94	4.32	-12.97	1.04
X-Rüzgar+%5	72.91	-11.27	34.06	0.05	-0.59	7.01	-0.16
X-Rüzgar-%5	63.51	-12.74	47.06	0.02	-0.01	10.56	0.00
Y-Rüzgar+%5	37.68	-1.47	9.28	-0.19	1.69	2.40	0.46
Y-Rüzgar-%5	52.61	0.60	-9.05	-0.15	0.88	-2.60	0.22

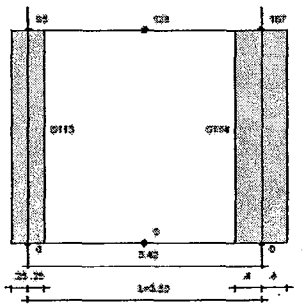

Material:E1 BS30 CS420 (t,m)

BETONARME :	X-(G+Q)	X-(G+Q+E)	Y-(G+Q)	Y-(G+Q+E)
max. Nd (t) :	1500.508	1636.498	1500.908	1300.008
max. M (tm) :	37.523	288.870	37.522	32.500
fcd (kg/cm²) :	200.000	200.000	200.000	200.000
ρ :	0.0025	0.0025	0.0025	0.0025
As (cm²) :	35.625	35.625	35.625	35.625

DONATI :2x11ø16 (düşey) + ø12/15 (yatay)

STAA-CAD V7

FİRMA :	03-23-2005	
PROJE : perdeli sistem		(perdeli.ST4)

P113 PANELI
I/K:3321/0 Io/Jo:3323/0 J/L:3328/ Bx/By :431./50. Hk :3.25 m

KOMBİNASYON	maxNd	üstMx	altMx	üstMy	altMy	Tx	Ty
1.(G+G+G+G)	1028.24	0.00	0.01	-0.10	0.01	0.00	-0.03
2.(Q+Q+Q+Q)	68.63	0.01	-0.01	-0.01	0.00	0.00	0.00
3.(o+Q+o+Q)	27.39	0.01	0.01	-0.01	0.00	0.01	0.00
4.(Q+o+Q+o)	27.40	0.00	-0.01	-0.01	0.00	0.00	0.00
5.(Q+Q+o+Q)	35.62	-0.03	0.03	-0.01	0.00	0.00	0.00
6.(o+Q+Q+o)	36.98	0.02	-0.05	-0.01	0.00	-0.01	0.00
7.(o+o+Q+Q)	36.99	0.03	0.01	-0.01	0.00	0.01	0.00
Zemin itkisi	0.00	0.00	0.00	0.00	0.00	0.00	0.00
X-Deprem+%5	0.01	-274.72	443.05	0.00	0.00	51.79	0.00
X-Deprem-%5	0.01	-307.11	554.52	0.00	0.00	76.13	0.00
Y-Deprem+%5	166.19	-19.18	66.16	-1.60	9.63	14.45	2.47
Y-Deprem-%5	166.18	19.18	-66.13	-1.60	9.63	-14.45	2.47
X-Rüzgar+%5	0.00	-42.35	71.73	0.00	0.00	9.04	0.00
X-Rüzgar-%5	0.00	-47.67	90.40	0.00	0.00	13.15	0.00
Y-Rüzgar+%5	31.43	-3.75	13.16	-0.26	1.94	2.98	0.52
Y-Rüzgar-%5	31.43	3.75	-13.16	-0.26	1.94	-2.98	0.52

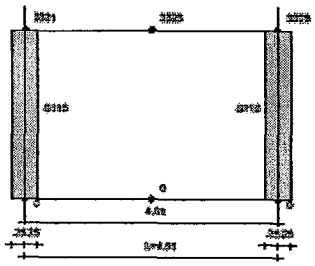

Material:Z1 B30 CS420 (t,m)

BETONARME :	X-(G+Q)	X-(G+Q+E)	Y-(G+Q)	Y-(G+Q+E)
max. Nd (t) :	1563.341	1106.879	1563.341	1272.053
max. M (tm):	39.084	554.559	39.084	31.826
fcd (kg/cm²):	200.000	200.000	200.000	200.000
μ :	0.0010	0.0010	0.0012	0.0012
As (cm²):	21.550	21.550	26.927	26.927

DONATI :2x17ø16 (düşey) + ø12/15 (yatay)

P114 PANELI
I/K:3329/0 Io/Jo:3336/0 J/L:3344/ Bx/By :431./50. Hk :3.25 m

KOMBİNASYON	maxNd	üstMx	altMx	üstMy	altMy	Tx	Ty
1.(G+G+G+G)	1045.23	0.00	0.01	-0.10	0.01	0.00	-0.03
2.(Q+Q+Q+Q)	68.64	0.01	-0.01	-0.01	0.00	0.00	0.00
3.(o+Q+o+Q)	27.34	0.01	0.00	-0.01	0.00	0.00	0.00
4.(Q+o+Q+o)	27.57	0.00	-0.01	-0.01	0.00	0.00	0.00
5.(Q+Q+o+Q)	35.65	-0.03	0.02	-0.01	0.00	0.00	0.00
6.(o+Q+Q+o)	37.03	0.02	-0.04	-0.01	0.00	-0.01	0.00
7.(o+o+Q+Q)	36.96	0.03	0.00	-0.01	0.00	0.01	0.00
Zemin itkisi	0.00	0.00	0.00	0.00	0.00	0.00	0.00
X-Deprem+%5	0.01	-266.28	479.68	0.00	0.00	65.66	0.00
X-Deprem-%5	0.01	-308.36	552.84	0.00	0.00	75.23	0.00
Y-Deprem+%5	166.19	-24.94	42.42	-1.60	9.63	5.69	2.47
Y-Deprem-%5	166.19	24.93	-42.40	-1.60	9.63	-5.68	2.47
X-Rüzgar+%5	0.00	-40.78	78.42	0.00	0.00	11.58	0.00
X-Rüzgar-%5	0.00	-47.75	90.67	0.00	0.00	13.21	0.00
Y-Rüzgar+%5	31.43	-4.91	8.63	-0.26	1.94	1.14	0.52
Y-Rüzgar-%5	31.43	4.91	-8.63	-0.26	1.94	-1.14	0.52

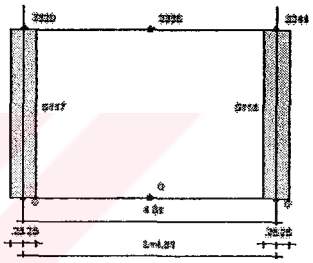

Material:Z1 B30 CS420 (t,m)

BETONARME :	X-(G+Q)	X-(G+Q+E)	Y-(G+Q)	Y-(G+Q+E)
max. Nd (t) :	1573.143	1113.882	1573.143	1280.054
max. M (tm):	39.329	552.879	39.329	32.001
fcd (kg/cm²):	200.000	200.000	200.000	200.000
μ :	0.0010	0.0010	0.0012	0.0012
As (cm²):	21.550	21.550	26.927	26.927

DONATI :2x17ø16 (düşey) + ø12/15 (yatay)

P115 PANELI
I/K:130/0 Io/Jo:170/0 J/L:217/ Bx/By :739.5/50. Hk :3.25 m

KOMBİNASYON	maxNd	üstMx	altMx	üstMy	altMy	Tx	Ty
1.(G+G+G+G)	2478.66	50.58	-36.74	-0.17	0.01	4.26	-0.05
2.(Q+Q+Q+Q)	220.60	5.71	-4.15	-0.02	0.00	0.48	-0.01
3.(o+Q+o+Q)	105.36	3.13	-2.29	-0.01	0.00	0.26	0.00
4.(Q+o+Q+o)	104.27	2.84	-2.05	-0.01	0.00	0.24	0.00
5.(Q+Q+o+Q)	137.50	3.70	-2.69	-0.01	0.00	0.34	0.00
6.(o+Q+Q+o)	140.18	3.92	-2.87	-0.01	0.00	0.32	0.00
7.(o+o+Q+Q)	141.59	4.32	-3.20	-0.02	0.00	0.35	-0.01
Zemin itkisi	0.00	0.00	0.00	0.00	0.00	0.00	0.00
X-Deprem+%5	1243.60	-1539.18	2142.60	-0.68	6.84	185.97	1.90
X-Deprem-%5	1136.16	-1357.85	1866.32	-0.26	-0.52	156.45	-0.24
Y-Deprem+%5	176.02	107.16	-164.25	-2.49	12.15	-17.56	2.97
Y-Deprem-%5	48.81	-107.61	164.48	-2.99	20.89	17.50	5.31
X-Rüzgar+%5	182.81	-245.93	353.78	-0.11	1.26	33.19	0.35
X-Rüzgar-%5	165.21	-216.00	307.58	-0.05	0.02	28.18	-0.01
Y-Rüzgar+%5	26.31	21.13	-32.60	-0.41	2.46	-3.53	0.63
Y-Rüzgar-%5	1.63	-21.07	32.54	-0.50	4.21	3.53	1.14

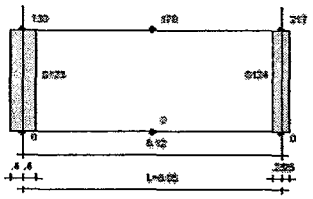

Material:Z1 B30 CS420 (t,m)

BETONARME :	X-(G+Q)	X-(G+Q+E)	Y-(G+Q)	Y-(G+Q+E)
max. Nd (t) :	3823.083	1455.660	3823.083	2748.066
max. M (tm):	95.577	-2184.486	95.577	68.702
fcd (kg/cm²):	200.000	200.000	200.000	200.000
μ :	0.0010	0.0010	0.0012	0.0012
As (cm²):	36.975	36.975	46.219	46.219

DONATI :2x29ø16 (düşey) + ø12/15 (yatay)

STAA-CAD V11

FİRMA : | 03-23-2005

PROJE : perdeli sistem (perdeli.ST4)

P116 PANELI
I/K:217/0 Io/Jo:218/0 J/L:171/ Bx/By :230./50. Hk :3.25 m

KOMBİNASYON	maxNd	üstMx	altMx	üstMy	altMy	Tx	Ty
1.(G+G+G+G)	771.08	10.90	-0.96	-0.05	0.00	3.06	-0.02
2.(Q+Q+Q+Q)	66.99	1.76	-0.15	-0.01	0.00	0.49	0.00
3.(o+Q+o+Q)	31.67	1.35	-0.12	0.00	0.00	0.38	0.00
4.(Q+o+Q+o)	31.56	0.43	-0.04	0.00	0.00	0.12	0.00
5.(Q+Q+o+Q)	41.62	0.49	-0.02	0.00	0.00	0.14	0.00
6.(o+Q+Q+o)	42.21	1.41	-0.13	0.00	0.00	0.39	0.00
7.(o+o+Q+Q)	42.63	1.67	-0.16	-0.01	0.00	0.46	0.00
Zemin itkisi	0.00	0.00	0.00	0.00	0.00	0.00	0.00
X-Deprem+%5	196.54	21.56	184.85	-0.11	1.09	63.51	0.30
X-Deprem-%5	185.78	20.58	158.43	-0.04	-0.08	55.03	-0.04
Y-Deprem+%5	87.22	-37.41	-12.45	-0.81	4.44	-15.34	1.12
Y-Deprem-%5	74.46	-36.24	18.90	-0.89	5.63	-5.33	1.52
X-Rüzgar+%5	28.99	5.23	31.43	-0.02	0.20	11.28	0.06
X-Rüzgar-%5	27.17	5.02	26.99	-0.01	0.00	9.85	0.00
Y-Rüzgar+%5	14.96	-7.72	-2.46	-0.13	0.90	-3.13	0.24
Y-Rüzgar-%5	12.46	-7.43	3.79	-0.15	1.18	-1.12	0.22

Material:El BS30 CS420 (t,m)

BETONARME :	X-(G+Q)	X-(G+Q+E)	Y-(G+Q)	Y-(G+Q+E)
max. Nd (t) :	1186.688	641.523	1186.688	912.529
max. M (tm):	29.667	-185.967	29.667	22.813
fcd (kg/cm²):	200.000	200.000	200.000	200.000
μ :	0.0025	0.0025	0.0025	0.0025
As (cm²):	28.750	28.750	28.750	28.750

DONATI :2x9ø16 (düşey) + ø12/15 (yatay)

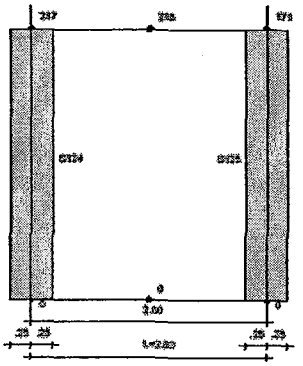

P117 PANELI
I/K:171/0 Io/Jo:219/0 J/L:277/ Bx/By :230./50. Hk :3.25 m

KOMBİNASYON	maxNd	üstMx	altMx	üstMy	altMy	Tx	Ty
1.(G+G+G+G)	760.70	2.31	-0.21	-0.05	0.00	0.65	-0.02
2.(Q+Q+Q+Q)	65.16	0.53	-0.05	-0.01	0.00	0.15	0.00
3.(o+Q+o+Q)	30.63	0.13	-0.02	0.00	0.00	0.05	0.00
4.(Q+o+Q+o)	30.75	0.31	-0.02	0.00	0.00	0.09	0.00
5.(Q+Q+o+Q)	40.69	0.37	-0.02	0.00	0.00	0.11	0.00
6.(o+Q+Q+o)	41.10	0.24	-0.03	0.00	0.00	0.07	0.00
7.(o+o+Q+Q)	41.07	0.37	-0.04	-0.01	0.00	0.10	0.00
Zemin itkisi	0.00	0.00	0.00	0.00	0.00	0.00	0.00
X-Deprem+%5	89.10	17.01	185.25	-0.05	0.55	62.23	0.15
X-Deprem-%5	92.73	8.80	159.47	-0.02	-0.04	51.77	-0.02
Y-Deprem+%5	128.11	-20.49	-13.92	-0.82	4.73	-16.59	1.22
Y-Deprem-%5	127.42	-18.73	16.66	-0.87	5.49	1.82	1.42
X-Rüzgar+%5	12.80	4.47	31.50	-0.01	0.10	11.07	0.02
X-Rüzgar-%5	13.42	3.06	27.17	0.00	0.00	9.30	0.00
Y-Rüzgar+%5	24.47	-4.20	-2.77	-0.14	0.97	-2.14	0.26
Y-Rüzgar-%5	25.24	-2.22	3.33	-0.14	1.11	0.34	0.30

Material:El BS30 CS420 (t,m)

BETONARME :	X-(G+Q)	X-(G+Q+E)	Y-(G+Q)	Y-(G+Q+E)
max. Nd (t) :	1169.222	736.750	1169.222	962.274
max. M (tm):	29.231	-185.502	29.231	24.082
fcd (kg/cm²):	200.000	200.000	200.000	200.000
μ :	0.0025	0.0025	0.0025	0.0025
As (cm²):	28.750	28.750	28.750	28.750

DONATI :2x9ø16 (düşey) + ø12/15 (yatay)

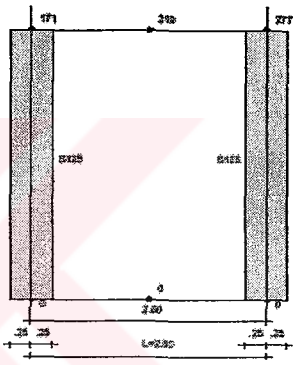

P118 PANELI
I/K:277/0 Io/Jo:342/0 J/L:413/ Bx/By :90.5/50. Hk :3.25 m

KOMBİNASYON	maxNd	üstMx	altMx	üstMy	altMy	Tx	Ty
1.(G+G+G+G)	390.46	-0.30	-0.07	-0.02	0.00	-0.11	-0.01
2.(Q+Q+Q+Q)	25.64	-0.01	0.00	0.00	0.00	0.00	0.00
3.(o+Q+o+Q)	12.16	-0.02	0.00	0.00	0.00	-0.01	0.00
4.(Q+o+Q+o)	12.05	0.00	0.00	0.00	0.00	0.00	0.00
5.(Q+Q+o+Q)	15.92	0.04	0.01	0.00	0.00	0.02	0.00
6.(o+Q+Q+o)	16.23	-0.02	-0.01	0.00	0.00	-0.01	0.00
7.(o+o+Q+Q)	16.24	-0.05	-0.01	0.00	0.00	-0.02	0.00
Zemin itkisi	0.00	0.00	0.00	0.00	0.00	0.00	0.00
X-Deprem+%5	7.06	29.57	55.58	-0.01	0.05	26.20	0.01
X-Deprem-%5	8.06	22.30	46.97	0.00	0.00	21.31	0.00
Y-Deprem+%5	55.82	-4.46	-5.14	-0.23	1.99	-2.96	0.51
Y-Deprem-%5	57.01	4.17	5.07	-0.24	2.06	2.84	0.53
X-Rüzgar+%5	0.96	5.53	9.60	0.00	0.01	4.66	0.00
X-Rüzgar-%5	1.12	4.31	8.16	0.00	0.00	3.84	0.00
Y-Rüzgar+%5	10.24	-0.89	-1.02	-0.05	0.40	-0.59	0.11
Y-Rüzgar-%5	10.57	0.83	1.01	-0.06	0.41	0.57	0.11

Material:El BS30 CS420 (t,m)

BETONARME :	X-(G+Q)	X-(G+Q+E)	Y-(G+Q)	Y-(G+Q+E)
max. Nd (t) :	461.659	219.038	461.659	382.107
max. M (tm):	11.541	-55.661	11.541	9.578
fcd (kg/cm²):	200.000	200.000	200.000	200.000
μ :	0.0025	0.0025	0.0025	0.0025
As (cm²):	11.312	11.312	11.312	11.312

DONATI :2x3ø16 (düşey) + ø12/15 (yatay)

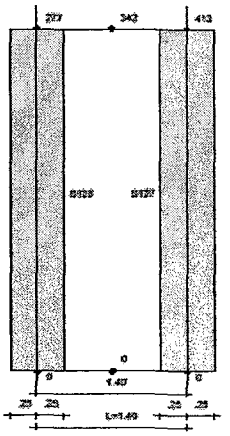

STAA-CAD V11

FİRMA : | 03-23-2005

PROJE : perdeli sistem (perdeli.ST4)

P119 PANELI
I/K:413/0 Io/Jo:488/0 J/L:410/ Bx/By :90.5/50. Hk :3.25 m

KOMBİNASYON	maxNd	üstMx	altMx	üstMy	altMy	Tx	Ty
1.(G+G+G+G)	390.46	0.30	0.07	-0.02	0.00	0.12	-0.01
2.(Q+Q+Q+Q)	25.64	0.01	0.00	0.00	0.00	0.00	0.00
3.(o+Q+o+Q)	12.13	0.05	0.01	0.00	0.00	0.02	0.00
4.(Q+o+Q+o)	12.08	-0.04	-0.01	0.00	0.00	-0.01	0.00
5.(Q+Q+o+Q)	15.92	-0.02	0.00	0.00	0.00	-0.01	0.00
6.(o+Q+Q+o)	16.23	0.01	0.00	0.00	0.00	0.00	0.00
7.(o+o+Q+Q)	16.24	0.04	0.01	0.00	0.00	0.01	0.00
Zemin itkisi	0.00	0.00	0.00	0.00	0.00	0.00	0.00
X-Deprem+%5	7.04	29.57	55.56	0.01	-0.05	26.20	-0.01
X-Deprem-%5	8.05	22.30	46.97	0.00	0.00	21.31	0.00
Y-Deprem+%5	57.01	-4.17	-5.06	-0.24	2.06	-2.85	0.53
Y-Deprem-%5	55.82	4.46	5.14	-0.32	1.99	2.95	0.51
X-Rüzgar+%5	0.95	5.53	9.40	0.00	-0.01	4.66	0.00
X-Rüzgar-%5	1.12	4.31	8.16	0.00	0.00	3.84	0.00
Y-Rüzgar+%5	10.57	-0.83	-1.01	-0.06	0.41	-0.57	0.11
Y-Rüzgar-%5	10.34	0.69	1.03	-0.05	0.40	0.59	0.11

Material:E1 BS30 CS420 (t,m)

BETONARME :	X-(G+Q)	X-(G+Q+E)	Y-(G+Q)	Y-(G+Q+E)
max. Nd (t) :	461.655	333.135	461.655	383.104
max. M (tm):	11.541	55.657	11.541	9.578
fcd (kg/cm²):	200.000	200.000	200.000	200.000
μ :	0.0025	0.0025	0.0025	0.0025
As (cm²):	11.312	11.312	11.312	11.312

DONATI :2x3ø16 (düşey) + ø12/15 (yatay)

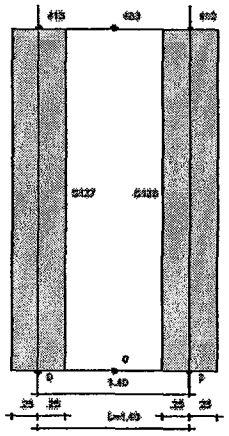

P120 PANELI
I/K:410/0 Io/Jo:336/0 J/L:273/ Bx/By :230./50. Hk :3.25 m

KOMBİNASYON	maxNd	üstMx	altMx	üstMy	altMy	Tx	Ty
1.(G+G+G+G)	760.67	-2.30	0.20	-0.05	0.00	-0.65	-0.02
2.(Q+Q+Q+Q)	65.15	-0.52	0.05	-0.01	0.00	-0.15	0.00
3.(o+Q+o+Q)	30.62	-0.20	0.01	0.00	0.00	-0.05	0.00
4.(Q+o+Q+o)	30.80	-0.29	0.03	0.00	0.00	-0.08	0.00
5.(Q+Q+o+Q)	40.60	-0.35	0.05	0.00	0.00	-0.09	0.00
6.(o+Q+Q+o)	41.17	-0.28	0.02	0.00	0.00	-0.08	0.00
7.(o+o+Q+Q)	41.09	-0.34	0.02	-0.01	0.00	-0.10	0.00
Zemin itkisi	0.00	0.00	0.00	0.00	0.00	0.00	0.00
X-Deprem+%5	89.07	17.01	185.25	0.05	-0.55	62.23	-0.15
X-Deprem-%5	92.70	8.80	159.47	0.02	0.04	51.77	0.02
Y-Deprem+%5	137.42	10.73	-16.67	-0.87	5.49	-1.83	1.42
Y-Deprem-%5	133.11	20.48	12.92	-0.83	4.79	10.58	1.22
X-Rüzgar+%5	12.80	4.47	31.50	0.01	-0.10	11.07	-0.03
X-Rüzgar-%5	13.41	3.06	27.17	0.00	0.00	9.30	0.00
Y-Rüzgar+%5	25.24	2.22	-2.34	-0.14	1.11	-0.34	0.30
Y-Rüzgar-%5	24.47	4.20	2.77	-0.14	0.97	2.14	0.26

Material:E1 BS30 CS420 (t,m)

BETONARME :	X-(G+Q)	X-(G+Q+E)	Y-(G+Q)	Y-(G+Q+E)
max. Nd (t) :	1169.180	914.889	1169.180	962.242
max. M (tm):	29.229	185.492	29.229	24.081
fcd (kg/cm²):	200.000	200.000	200.000	200.000
μ :	0.0025	0.0025	0.0025	0.0025
As (cm²):	28.750	28.750	28.750	28.750

DONATI :2x9ø16 (düşey) + ø12/15 (yatay)

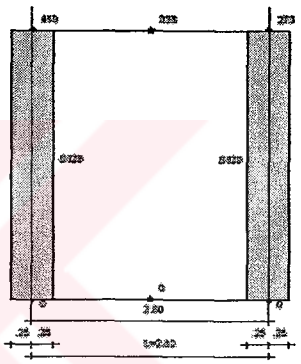

P121 PANELI
I/K:273/0 Io/Jo:327/0 J/L:335/ Bx/By :230./50. Hk :3.25 m

KOMBİNASYON	maxNd	üstMx	altMx	üstMy	altMy	Tx	Ty
1.(G+G+G+G)	771.03	-10.88	0.95	-0.05	0.00	-3.06	-0.02
2.(Q+Q+Q+Q)	66.97	-1.75	0.15	-0.01	0.00	-0.49	0.00
3.(o+Q+o+Q)	31.46	-0.54	0.04	0.00	0.00	-0.15	0.00
4.(Q+o+Q+o)	31.75	-1.24	0.11	0.00	0.00	-0.35	0.00
5.(Q+Q+o+Q)	41.90	-1.49	0.15	0.00	0.00	-0.41	0.00
6.(o+Q+Q+o)	42.04	-0.51	0.04	0.00	0.00	-0.14	0.00
7.(o+o+Q+Q)	42.49	-1.55	0.12	-0.01	0.00	-0.44	0.00
Zemin itkisi	0.00	0.00	0.00	0.00	0.00	0.00	0.00
X-Deprem+%5	198.51	21.56	184.85	0.11	-1.09	62.51	-0.30
X-Deprem-%5	185.75	20.58	158.43	0.04	0.08	55.08	0.04
Y-Deprem+%5	74.45	36.24	-18.91	-0.89	5.83	5.33	1.52
Y-Deprem-%5	87.20	37.41	12.43	-0.81	4.44	15.24	1.12
X-Rüzgar+%5	28.94	5.23	31.42	0.02	-0.20	11.28	-0.06
X-Rüzgar-%5	27.17	5.02	26.99	0.01	0.00	9.85	0.00
Y-Rüzgar+%5	12.46	7.42	-3.79	-0.15	1.19	1.12	0.32
Y-Rüzgar-%5	14.95	7.72	2.46	-0.13	0.90	3.13	0.24

Material:E1 BS30 CS420 (t,m)

BETONARME :	X-(G+Q)	X-(G+Q+E)	Y-(G+Q)	Y-(G+Q+E)
max. Nd (t) :	1186.600	1034.513	1186.600	912.453
max. M (tm):	29.665	185.955	29.665	22.911
fcd (kg/cm²):	200.000	200.000	200.000	200.000
μ :	0.0025	0.0025	0.0025	0.0025
As (cm²):	28.750	28.750	28.750	28.750

DONATI :2x9ø16 (düşey) + ø12/15 (yatay)

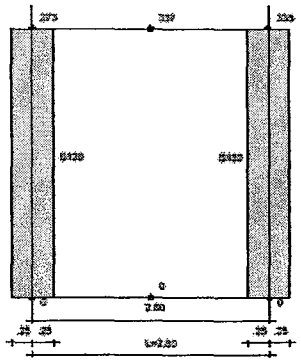

STAA-CAD V7

FİRMA : | 03-23-2005

PROJE : perdeli sistem (perdeli.ST4)

P122 PANELI
I/K:335/0 Io/Jo:272/0 J/L:213/ Bx/By :739.5/50. Hk :3.25 m

KOMBİNASYON	maxNd	üstMx	altMx	üstMy	altMy	Tx	Ty
1.(G+G+G+G)	2478.46	-58.53	36.66	-0.17	0.02	-4.27	-0.05
2.(Q+Q+Q+Q)	220.55	-5.69	4.12	-0.02	0.00	-0.43	-0.01
3.(o+Q+o+Q)	103.85	-3.05	2.20	-0.01	0.00	-0.26	0.00
4.(Q+o+Q+o)	105.73	-2.98	2.12	-0.01	0.00	-0.24	0.00
5.(Q+Q+o+Q)	140.10	-4.05	2.02	-0.02	0.00	-0.32	-0.01
6.(o+Q+Q+o)	138.58	-3.78	2.71	-0.01	0.00	-0.33	0.00
7.(o+o+Q+Q)	140.49	-4.08	2.98	-0.02	0.00	-0.36	0.00
Zemin itkisi	0.00	0.00	0.00	0.00	0.00	0.00	0.00
X-Deprem+%5	1242.50	-1539.18	2143.60	0.68	-6.84	185.97	-1.90
X-Deprem-%5	1126.06	-1357.85	1866.32	0.26	0.52	156.45	0.24
Y-Deprem+%5	48.70	107.75	-164.67	-2.99	20.69	-17.52	5.51
Y-Deprem-%5	175.91	-107.03	164.06	-2.49	12.15	17.55	2.97
X-Rüzgar+%5	182.80	-245.93	352.78	0.11	-1.26	33.19	-0.35
X-Rüzgar-%5	165.30	-216.00	307.58	0.05	-0.02	28.18	0.01
Y-Rüzgar+%5	1.62	21.08	-32.57	-0.50	4.21	-3.53	1.14
Y-Rüzgar-%5	26.29	-21.11	32.58	-0.41	2.48	3.53	0.63

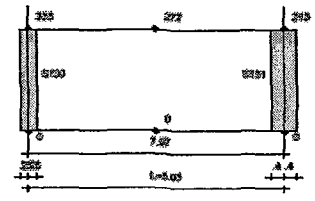

Material:Z1 BS30 CS420 (t,m)

BETONARME :	X-(G+Q)	X-(G+Q+E)	Y-(G+Q)	Y-(G+Q+E)
max. Nd (t) :	3822.723	3942.505	3822.723	2747.708
max. M (tm) :	95.568	2164.384	95.568	68.693
fcd (kg/cm²) :	200.000	200.000	200.000	200.000
μ :	0.0010	0.0010	0.0012	0.0012
As (cm²) :	36.975	36.975	46.219	46.219

DONATI :2x29ø16 (düşey) + ø12/15 (yatay)

P123 PANELI
I/K:169/0 Io/Jo:216/0 J/L:275/ Bx/By :285./50. Hk :2.25 m

KOMBİNASYON	maxNd	üstMx	altMx	üstMy	altMy	Tx	Ty
1.(G+G+G+G)	966.55	-2.91	0.73	-0.07	0.01	-0.67	-0.02
2.(Q+Q+Q+Q)	82.98	-0.82	0.21	-0.01	0.00	-0.19	0.00
3.(o+Q+o+Q)	39.07	-0.39	0.09	0.00	0.00	-0.09	0.00
4.(Q+o+Q+o)	39.42	-0.37	0.10	0.00	0.00	-0.08	0.00
5.(Q+Q+o+Q)	51.96	-0.45	0.15	0.00	0.00	-0.09	0.00
6.(o+Q+Q+o)	52.33	-0.42	0.11	-0.01	0.00	-0.10	0.00
7.(o+o+Q+Q)	52.71	-0.62	0.12	-0.01	0.00	-0.16	0.00
Zemin itkisi	0.00	0.00	0.00	0.00	0.00	0.00	0.00
X-Deprem+%5	629.71	-125.10	398.19	-0.22	3.18	84.03	0.88
X-Deprem-%5	560.53	-103.19	282.57	-0.12	-0.24	55.19	-0.11
Y-Deprem+%5	362.22	10.98	-68.11	-0.94	4.33	-17.58	1.04
Y-Deprem-%5	281.30	-14.91	69.07	-1.17	8.40	15.66	2.22
X-Rüzgar+%5	94.34	-19.12	68.21	-0.05	0.59	15.10	0.16
X-Rüzgar-%5	82.93	-15.60	48.82	-0.02	0.01	10.22	0.00
Y-Rüzgar+%5	61.59	2.09	-13.57	-0.15	0.88	-3.53	0.22
Y-Rüzgar-%5	45.50	-2.88	13.76	-0.19	1.69	3.35	0.46

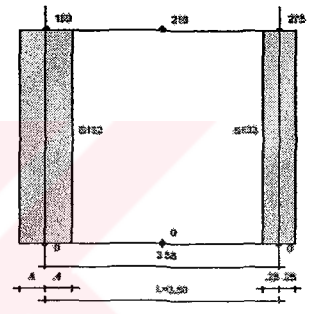

Material:Z1 BS30 CS420 (t,m)

BETONARME :	X-(G+Q)	X-(G+Q+E)	Y-(G+Q)	Y-(G+Q+E)
max. Nd (t) :	1485.944	1679.241	1485.944	1230.824
max. M (tm) :	37.149	399.129	37.149	32.271
fcd (kg/cm²) :	200.000	200.000	200.000	200.000
μ :	0.0025	0.0025	0.0025	0.0025
As (cm²) :	35.625	35.625	35.625	35.625

DONATI :2x11ø16 (düşey) + ø12/15 (yatay)

P124 PANELI
I/K:275/0 Io/Jo:340/0 J/L:341/ Bx/By :404.5/50. Hk :3.25 m

KOMBİNASYON	maxNd	üstMx	altMx	üstMy	altMy	Tx	Ty
1.(G+G+G+G)	1372.12	-3.60	1.42	-0.10	0.01	-0.67	-0.02
2.(Q+Q+Q+Q)	119.57	-1.13	0.45	-0.01	0.00	-0.21	0.00
3.(o+Q+o+Q)	56.16	-0.56	0.21	0.00	0.00	-0.11	0.00
4.(Q+o+Q+o)	56.99	-0.54	0.23	-0.01	0.00	-0.09	0.00
5.(Q+Q+o+Q)	75.13	-0.70	0.33	-0.01	0.00	-0.11	0.00
6.(o+Q+Q+o)	75.15	-0.64	0.26	-0.01	0.00	-0.12	0.00
7.(o+o+Q+Q)	76.03	-0.85	0.28	-0.01	0.00	-0.17	0.00
Zemin itkisi	0.00	0.00	0.00	0.00	0.00	0.00	0.00
X-Deprem+%5	414.34	-256.76	632.48	-0.32	3.17	115.81	0.88
X-Deprem-%5	427.09	-208.95	451.28	-0.12	-0.24	77.02	-0.11
Y-Deprem+%5	469.23	16.29	-101.04	-1.38	7.01	-26.05	1.73
Y-Deprem-%5	464.39	-48.55	112.91	-1.62	11.06	20.11	2.91
X-Rüzgar+%5	56.67	-40.01	107.67	-0.05	0.59	28.82	0.16
X-Rüzgar-%5	58.78	-31.08	77.33	-0.02	0.01	14.23	0.00
Y-Rüzgar+%5	78.48	3.00	-20.07	-0.23	1.42	-5.25	0.37
Y-Rüzgar-%5	81.45	-9.60	22.71	-0.27	2.23	4.03	0.60

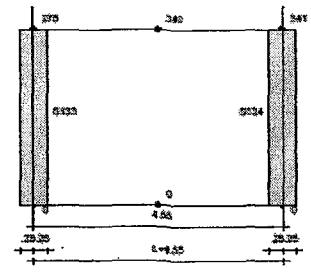

Material:Z1 BS30 CS420 (t,m)

BETONARME :	X-(G+Q)	X-(G+Q+E)	Y-(G+Q)	Y-(G+Q+E)
max. Nd (t) :	2112.276	1906.032	2112.276	1976.981
max. M (tm) :	52.807	634.354	52.807	49.402
fcd (kg/cm²) :	200.000	200.000	200.000	200.000
μ :	0.0010	0.0010	0.0012	0.0012
As (cm²) :	20.225	20.225	25.281	25.281

DONATI :2x16ø16 (düşey) + ø12/15 (yatay)

STAA-CAD V11

FİRMA : | 03-23-2005

PROJE : perdeli sistem (perdeli.ST4)

P125 PANELI
I/K:407/0 Io/Jo:486/0 J/L:408/ Bx/By :404.5/50. Hk :3.25 m

KOMBİNASYON	maxNd	üstMx	altMx	üstMy	altMy	Tx	Ty
1.(G+G+G+G)	1372.00	3.62	-1.48	-0.10	0.01	0.66	-0.03
2.(Q+Q+Q+Q)	119.54	1.13	-0.46	-0.01	0.00	0.21	0.00
3.(o+Q+o+Q)	56.72	0.50	-0.22	0.00	0.00	0.09	0.00
4.(Q+o+Q+o)	56.40	0.60	-0.23	-0.01	0.00	0.12	0.00
5.(Q+Q+o+Q)	74.66	0.76	-0.26	-0.01	0.00	0.16	0.00
6.(o+Q+Q+o)	75.25	0.62	-0.25	-0.01	0.00	0.12	0.00
7.(o+o+Q+Q)	76.23	0.81	-0.26	-0.01	0.00	0.13	0.00
Zemin itkisi	0.00	0.00	0.00	0.00	0.00	0.00	0.00
X-Deprem+%5	414.27	-255.76	632.48	0.22	-3.17	115.91	-0.88
X-Deprem-%5	427.02	-200.95	451.28	0.12	0.24	77.02	0.11
Y-Deprem+%5	484.27	48.58	-114.01	-1.62	11.06	-20.13	2.91
Y-Deprem-%5	469.27	-16.26	100.95	-1.28	7.01	26.06	1.73
X-Rüzgar+%5	56.66	-40.01	107.67	0.05	-0.58	20.82	-0.16
X-Rüzgar-%5	58.77	-31.08	77.32	0.02	-0.01	14.23	0.00
Y-Rüzgar+%5	81.45	9.60	-22.72	-0.27	2.23	-4.04	0.60
Y-Rüzgar-%5	78.47	-3.00	20.06	-0.23	1.42	5.25	0.37

Material:El BS30 CS420 (t,m)

BETONARME :	X-(G+Q)	X-(G+Q+E)	Y-(G+Q)	Y-(G+Q+E)
max. Nd (t) :	2112.067	1077.270	2112.067	1975.913
max. M (tm):	52.802	-634.415	52.802	49.398
fcd (kg/cm²):	200.000	200.000	200.000	200.000
μ :	0.0010	0.0010	0.0012	0.0012
As (cm²):	20.225	20.225	25.281	25.281

DONATI :2x16ø16 (düşey) + ø12/15 (yatay)

P126 PANELI
I/K:408/0 Io/Jo:234/0 J/L:271/ Bx/By :265./50. Hk :3.25 m

KOMBİNASYON	maxNd	üstMx	altMx	üstMy	altMy	Tx	Ty
1.(G+G+G+G)	966.44	2.92	-0.77	-0.07	0.01	0.66	-0.02
2.(Q+Q+Q+Q)	82.95	0.82	-0.21	-0.01	0.00	0.19	0.00
3.(o+Q+o+Q)	39.12	0.54	-0.17	0.00	0.00	0.14	0.00
4.(Q+o+Q+o)	39.25	0.12	-0.02	-0.01	0.00	0.03	0.00
5.(Q+Q+o+Q)	52.13	0.14	0.00	-0.01	0.00	0.04	0.00
6.(o+Q+Q+o)	52.12	0.67	-0.17	0.00	0.00	0.15	0.00
7.(o+o+Q+Q)	52.70	0.71	-0.22	-0.01	0.00	0.15	0.00
Zemin itkisi	0.00	0.00	0.00	0.00	0.00	0.00	0.00
X-Deprem+%5	629.66	-125.10	398.19	0.32	-3.19	84.03	-0.88
X-Deprem-%5	560.49	-103.19	282.57	0.12	0.24	55.19	0.11
Y-Deprem+%5	281.24	14.92	-69.13	-1.17	8.40	-16.68	2.22
Y-Deprem-%5	263.15	-10.97	68.05	-0.94	4.33	17.57	1.04
X-Rüzgar+%5	94.23	-19.12	68.21	0.05	-0.59	15.10	-0.16
X-Rüzgar-%5	82.92	-15.60	48.82	0.02	-0.01	10.22	0.00
Y-Rüzgar+%5	45.49	2.88	-13.77	-0.19	1.69	-3.85	0.46
Y-Rüzgar-%5	61.58	-2.09	13.56	-0.15	0.88	3.53	0.22

Material:El BS30 CS420 (t,m)

BETONARME :	X-(G+Q)	X-(G+Q+E)	Y-(G+Q)	Y-(G+Q+E)
max. Nd (t) :	1485.742	419.737	1485.742	1230.682
max. M (tm):	37.144	-299.173	37.144	33.266
fcd (kg/cm²):	200.000	200.000	200.000	200.000
μ :	0.0025	0.0025	0.0025	0.0025
As (cm²):	35.625	35.625	35.625	35.625

DONATI :2x11ø16 (düşey) + ø12/15 (yatay)

P135 PANELI
I/K:411/0 Io/Jo:489/0 J/L:570/ Bx/By :50./58. Hk :3.25 m

KOMBİNASYON	maxNd	üstMx	altMx	üstMy	altMy	Tx	Ty
1.(G+G+G+G)	284.23	0.00	0.00	-1.61	-0.09	0.00	-0.53
2.(Q+Q+Q+Q)	17.84	0.00	0.00	-0.07	0.02	0.00	-0.02
3.(o+Q+o+Q)	8.45	0.00	0.00	-0.16	-0.02	0.00	-0.05
4.(Q+o+Q+o)	8.47	0.00	0.00	0.08	0.03	0.00	0.04
5.(Q+Q+o+Q)	11.17	0.00	0.00	0.07	0.04	0.00	0.03
6.(o+Q+Q+o)	11.26	0.00	0.00	-0.18	-0.01	0.00	-0.06
7.(o+o+Q+Q)	11.41	0.00	0.00	-0.04	0.01	0.00	-0.01
Zemin itkisi	0.00	0.00	0.00	0.00	0.00	0.00	0.00
X-Deprem+%5	7.98	-0.22	1.62	6.63	15.43	0.43	6.79
X-Deprem-%5	33.20	-0.18	0.92	-0.23	-0.82	0.23	-0.32
Y-Deprem+%5	144.69	0.03	-0.41	7.46	46.92	-0.12	16.73
Y-Deprem-%5	174.57	-0.03	0.41	15.61	66.20	0.12	25.17
X-Rüzgar+%5	0.37	-0.03	0.29	1.24	2.83	0.08	1.25
X-Rüzgar-%5	3.79	-0.03	0.17	0.07	0.10	0.04	0.05
Y-Rüzgar+%5	25.37	0.01	-0.08	1.98	9.45	-0.02	3.52
Y-Rüzgar-%5	31.24	-0.01	0.08	3.64	13.31	0.02	5.21

Material:El BS30 CS420 (t,m)

BETONARME :	X-(G+Q)	X-(G+Q+E)	Y-(G+Q)	Y-(G+Q+E)
max. Nd (t) :	314.440	214.075	314.440	47.483
max. M (tm):	7.861	5.352	7.861	-66.316
fcd (kg/cm²):	200.000	200.000	200.000	200.000
μ :	0.0025	0.0025	0.0057	0.0057
As (cm²):	7.250	7.250	16.515	16.515

DONATI :2x2ø16 (düşey) + ø12/15 (yatay)

STAA-PAD V11

FİRMA :	03-23-2005
PROJE : perdeli sistem	(perdeli.ST4)

P136 PANELI
I/K:341/0 Io/Jo:412/0 J/L:411/ Bx/By :50./405. Hk :3.25 m

KOMBİNASYON	maxNd	üstMx	altMx	üstMy	altMy	Tx	Ty
1.(G+G+G+G)	1392.22	0.00	0.00	-14.72	8.67	0.00	-1.86
2.(Q+Q+Q+Q)	122.13	0.00	0.00	-1.21	0.82	0.00	-0.12
3.(o+Q+o+Q)	57.32	0.00	0.00	-0.60	0.43	0.00	-0.05
4.(Q+o+Q+o)	58.35	0.00	0.00	-0.66	0.40	0.00	-0.08
5.(Q+Q+o+Q)	76.96	0.00	0.00	-0.87	0.56	0.00	-0.10
6.(o+Q+Q+o)	76.68	0.00	0.00	-0.85	0.62	0.00	-0.07
7.(o+o+Q+Q)	77.72	0.00	0.00	-0.79	0.48	0.00	-0.10
Zemin itkisi	0.00	0.00	0.00	0.00	0.00	0.00	0.00
X-Deprem+%5	119.39	-1.48	10.42	-46.24	147.01	2.75	31.62
X-Deprem-%5	226.79	-1.21	6.59	-5.44	-4.95	1.65	-3.20
Y-Deprem+%5	664.68	0.16	-2.28	-243.96	519.57	-0.65	84.81
Y-Deprem-%5	792.06	-0.16	2.27	-288.86	699.87	0.65	126.16
X-Rüzgar+%5	8.84	-0.21	1.83	-7.71	26.76	0.50	5.86
X-Rüzgar-%5	26.50	-0.17	1.18	-1.41	1.32	0.31	-0.83
Y-Rüzgar+%5	113.26	0.03	-0.46	-42.30	101.22	-0.13	17.82
Y-Rüzgar-%5	128.16	-0.03	0.46	-52.18	137.09	0.13	26.12

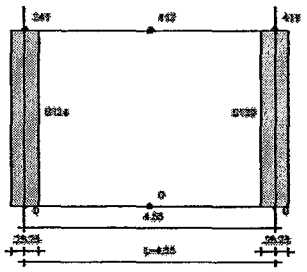

Material:El B30 CS420 (t,m)

BETONARME :	X-(G+Q)	X-(G+Q+E)	Y-(G+Q)	Y-(G+Q+E)
max. Nd (t) :	2144.516	1394.964	2144.516	2306.407
max. M (tm):	53.613	34.874	53.613	709.258
fcd (kg/cm²):	200.000	200.000	200.000	200.000
ρ :	0.0013	0.0013	0.0010	0.0010
As (cm²):	25.313	25.313	20.250	20.250

DONATI :2x16ø16 (düşey) + ø12/15 (yatay)

P137 PANELI
I/K:217/0 Io/Jo:276/0 J/L:341/ Bx/By :50./449.5 Hk :3.25 m

KOMBİNASYON	maxNd	üstMx	altMx	üstMy	altMy	Tx	Ty
1.(G+G+G+G)	1514.18	0.00	0.00	-11.29	8.40	0.00	-0.89
2.(Q+Q+Q+Q)	132.92	0.00	0.00	-1.19	0.93	0.00	-0.08
3.(o+Q+o+Q)	63.05	0.00	0.00	-0.13	0.28	0.00	0.05
4.(Q+o+Q+o)	62.73	0.00	0.00	-1.06	0.64	0.00	-0.13
5.(Q+Q+o+Q)	82.74	0.00	0.00	-1.36	0.87	0.00	-0.15
6.(o+Q+Q+o)	83.97	0.00	0.00	-0.41	0.51	0.00	0.03
7.(o+o+Q+Q)	84.84	0.00	0.00	-0.58	0.45	0.00	-0.04
Zemin itkisi	0.00	0.00	0.00	0.00	0.00	0.00	0.00
X-Deprem+%5	211.57	-1.46	9.76	-129.40	214.25	2.55	22.03
X-Deprem-%5	324.23	-1.28	7.45	-71.07	24.54	1.98	-14.32
Y-Deprem+%5	302.71	0.11	-1.37	-271.13	614.07	-0.39	105.52
Y-Deprem-%5	329.66	-0.11	1.37	-352.03	839.16	0.39	149.89
X-Rüzgar+%5	41.18	-0.21	1.70	-24.48	38.75	0.46	4.39
X-Rüzgar-%5	44.95	-0.18	1.31	-13.27	7.00	0.35	-1.52
Y-Rüzgar+%5	49.46	0.02	-0.27	-47.03	118.93	-0.08	22.12
Y-Rüzgar-%5	54.78	-0.02	0.27	-62.83	163.69	0.08	31.03

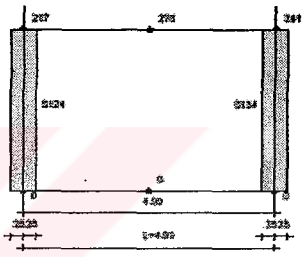

Material:El B30 CS420 (t,m)

BETONARME :	X-(G+Q)	X-(G+Q+E)	Y-(G+Q)	Y-(G+Q+E)
max. Nd (t) :	2332.524	1335.531	2332.524	1976.762
max. M (tm):	58.313	33.388	58.313	848.485
fcd (kg/cm²):	200.000	200.000	200.000	200.000
ρ :	0.0013	0.0013	0.0010	0.0010
As (cm²):	28.094	28.094	22.475	22.475

DONATI :2x17ø16 (düşey) + ø12/15 (yatay)

P139 PANELI
I/K:98/0 Io/Jo:131/0 J/L:171/ Bx/By :50./260. Hk :3.25 m

KOMBİNASYON	maxNd	üstMx	altMx	üstMy	altMy	Tx	Ty
1.(G+G+G+G)	857.58	0.00	0.00	-4.49	2.10	0.00	-0.74
2.(Q+Q+Q+Q)	73.65	0.00	0.00	-0.51	0.25	0.00	-0.08
3.(o+Q+o+Q)	34.65	0.00	0.00	-0.07	0.11	0.00	0.01
4.(Q+o+Q+o)	34.77	0.00	0.00	-0.42	0.13	0.00	-0.09
5.(Q+Q+o+Q)	45.92	0.00	0.00	-0.30	0.15	0.00	-0.05
6.(o+Q+Q+o)	46.53	0.00	0.00	-0.07	0.15	0.00	0.02
7.(o+o+Q+Q)	46.40	0.00	0.00	-0.61	0.19	0.00	-0.13
Zemin itkisi	0.00	0.00	0.00	0.00	0.00	0.00	0.00
X-Deprem+%5	180.55	-0.76	4.75	-1.49	40.13	1.23	11.89
X-Deprem-%5	177.74	-0.71	4.38	-15.46	0.13	1.13	-4.72
Y-Deprem+%5	32.47	0.03	-0.22	-22.76	236.90	-0.06	65.89
Y-Deprem-%5	29.15	-0.03	0.22	-6.16	284.37	0.06	85.60
X-Rüzgar+%5	26.92	-0.11	0.82	-0.13	7.33	0.22	2.22
X-Rüzgar-%5	26.46	-0.10	0.76	-2.48	0.61	0.20	-0.58
Y-Rüzgar+%5	5.92	0.01	-0.04	-1.94	46.73	-0.01	13.78
Y-Rüzgar-%5	5.27	-0.01	0.04	1.28	56.20	0.01	17.72

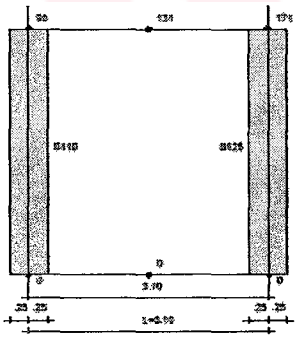

Material:El B30 CS420 (t,m)

BETONARME :	X-(G+Q)	X-(G+Q+E)	Y-(G+Q)	Y-(G+Q+E)
max. Nd (t) :	1318.461	1111.785	1318.461	960.383
max. M (tm):	32.962	27.795	32.962	286.715
fcd (kg/cm²):	200.000	200.000	200.000	200.000
ρ :	0.0025	0.0025	0.0025	0.0025
As (cm²):	32.500	32.500	32.500	32.500

DONATI :2x10ø16 (düşey) + ø12/15 (yatay)

STAA-CAD V11

FİRMA : | 03-23-2005

PROJE : perdeli sistem (perdeli.ST4)

P140 PANELI
I/K:46/0 Io/Jo:70/0 J/L:98/ Bx/By :50./519.5 Hk :3.25 m

KOMBİNASYON	maxNd	üstMx	altMx	üstMy	altMy	Tx	Ty
1.(G+G+G+G)	1680.78	0.00	0.00	-10.67	9.68	0.00	-0.31
2.(Q+Q+Q+Q)	144.69	0.00	0.00	-1.16	1.10	0.00	-0.02
3.(o+Q+o+Q)	68.26	0.00	0.00	-0.68	0.65	0.00	-0.01
4.(Q+o+Q+o)	68.21	0.00	0.00	-0.46	0.43	0.00	-0.01
5.(Q+Q+o+Q)	90.62	0.00	0.00	-0.53	0.57	0.00	0.01
6.(o+Q+Q+o)	91.62	0.00	0.00	-0.97	0.91	0.00	-0.02
7.(o+o+Q+Q)	90.72	0.00	0.00	-0.77	0.86	0.00	-0.03
Zemin itkisi	0.00	0.00	0.00	0.00	0.00	0.00	0.00
X-Deprem+%5	323.99	-1.32	7.57	-6.81	113.53	1.92	32.84
X-Deprem-%5	333.68	-1.34	8.89	22.94	-18.49	2.32	1.37
Y-Deprem+%5	256.20	-0.01	0.79	-458.59	890.93	0.24	133.03
Y-Deprem-%5	256.56	0.01	-0.79	-493.83	1047.59	-0.24	170.39
X-Rüzgar+%5	49.04	-0.18	1.28	-1.28	20.81	0.34	6.01
X-Rüzgar-%5	48.95	-0.18	1.50	3.62	-1.32	0.41	0.71
Y-Rüzgar+%5	60.11	0.00	0.16	-81.53	171.96	0.05	27.83
Y-Rüzgar-%5	60.25	0.00	-0.16	-88.44	203.16	-0.05	35.30

Material:El B30 CS420 (t,m)

BETONAME :	X-(G+Q)	X-(G+Q+E)	Y-(G+Q)	Y-(G+Q+E)
max. Nd (t) :	2584.585	2159.142	2584.585	2182.027
max. M (tm):	64.615	53.979	64.615	1058.261
fcd (kg/cm²):	200.000	200.000	200.000	200.000
μ :	0.0012	0.0012	0.0010	0.0010
As (cm²):	32.469	32.469	25.975	25.975

DONATI :2x20ø16 (düşey) + ø12/15 (yatay)

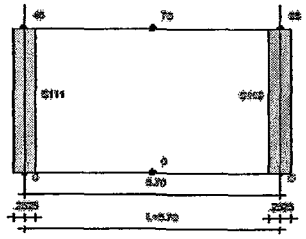

P141 PANELI
I/K:13/0 Io/Jo:27/0 J/L:46/ Bx/By :50./142.5 Hk :3.25 m

KOMBİNASYON	maxNd	üstMx	altMx	üstMy	altMy	Tx	Ty
1.(G+G+G+G)	467.19	0.00	0.00	-1.02	0.45	0.00	-0.17
2.(Q+Q+Q+Q)	40.07	0.00	0.00	-0.23	0.04	0.00	-0.06
3.(o+Q+o+Q)	18.85	0.00	0.00	-0.11	0.03	0.00	-0.02
4.(Q+o+Q+o)	18.92	0.00	0.00	-0.12	0.01	0.00	-0.03
5.(Q+Q+o+Q)	25.07	0.00	0.00	-0.36	0.00	0.00	-0.11
6.(o+Q+Q+o)	25.19	0.00	0.00	-0.14	0.04	0.00	-0.03
7.(o+o+Q+Q)	25.27	0.00	0.00	0.03	0.04	0.00	0.02
Zemin itkisi	0.00	0.00	0.00	0.00	0.00	0.00	0.00
X-Deprem+%5	88.12	-0.32	1.62	8.71	16.97	0.40	7.90
X-Deprem-%5	93.88	-0.35	2.47	-6.65	-1.63	0.65	-2.55
Y-Deprem+%5	199.64	-0.02	0.51	27.73	96.66	0.15	38.28
Y-Deprem-%5	192.79	0.02	-0.51	45.96	118.74	-0.15	50.68
X-Rüzgar+%5	12.80	-0.04	0.27	1.65	3.11	0.07	1.46
X-Rüzgar-%5	13.75	-0.05	0.41	-0.94	-0.01	0.11	-0.29
Y-Rüzgar+%5	23.93	0.00	0.10	6.67	19.36	0.03	8.01
Y-Rüzgar-%5	22.60	0.00	-0.10	10.31	23.76	-0.03	10.48

Material:El B30 CS420 (t,m)

BETONAME :	X-(G+Q)	X-(G+Q+E)	Y-(G+Q)	Y-(G+Q+E)
max. Nd (t) :	718.181	601.144	718.181	700.056
max. M (tm):	17.955	15.029	17.955	119.236
fcd (kg/cm²):	200.000	200.000	200.000	200.000
μ :	0.0025	0.0025	0.0025	0.0025
As (cm²):	17.813	17.813	17.813	17.813

DONATI :2x5ø16 (düşey) + ø12/15 (yatay)

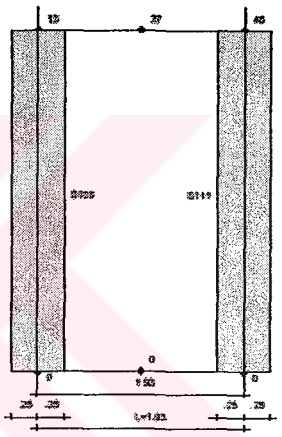

P142 PANELI
I/K:1/0 Io/Jo:5/0 J/L:13/ Bx/By :50./320.5 Hk :3.25 m

KOMBİNASYON	maxNd	üstMx	altMx	üstMy	altMy	Tx	Ty
1.(G+G+G+G)	1042.75	0.00	0.00	0.18	2.17	0.00	0.72
2.(Q+Q+Q+Q)	88.56	0.00	0.00	-0.78	0.52	0.00	-0.08
3.(o+Q+o+Q)	41.81	0.00	0.00	-0.32	0.26	0.00	-0.02
4.(Q+o+Q+o)	41.68	0.00	0.00	-0.42	0.23	0.00	-0.06
5.(Q+Q+o+Q)	55.00	0.00	0.00	-0.60	0.36	0.00	-0.08
6.(o+Q+Q+o)	55.86	0.00	0.00	-0.34	0.33	0.00	0.00
7.(o+o+Q+Q)	56.03	0.00	0.00	-0.52	0.31	0.00	-0.07
Zemin itkisi	0.00	0.00	0.00	0.00	0.00	0.00	0.00
X-Deprem+%5	222.76	-0.63	2.88	-14.31	67.33	0.69	16.31
X-Deprem-%5	221.88	-0.76	5.62	1.63	-3.99	1.50	-0.72
Y-Deprem+%5	688.62	-0.07	1.63	-175.72	423.24	0.48	76.16
Y-Deprem-%5	689.67	0.07	-1.63	-194.59	507.88	-0.48	96.40
X-Rüzgar+%5	33.15	-0.08	0.46	-2.53	12.30	0.12	3.01
X-Rüzgar-%5	32.98	-0.10	0.52	0.08	0.34	0.25	0.13
Y-Rüzgar+%5	119.73	-0.01	0.33	-31.13	82.97	0.10	15.96
Y-Rüzgar-%5	119.97	0.01	-0.33	-34.80	99.83	-0.10	20.01

Material:El B30 CS420 (t,m)

BETONAME :	X-(G+Q)	X-(G+Q+E)	Y-(G+Q)	Y-(G+Q+E)
max. Nd (t) :	1601.549	1253.192	1601.549	1829.982
max. M (tm):	40.039	32.830	40.039	510.568
fcd (kg/cm²):	200.000	200.000	200.000	200.000
μ :	0.0025	0.0025	0.0025	0.0025
As (cm²):	40.063	40.063	40.063	40.063

DONATI :2x12ø16 (düşey) + ø12/15 (yatay)

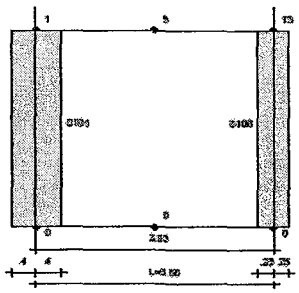

STAA-CAD V11

FİRMA : | 03-23-2005

PROJE : perdeli sistem (perdeli.ST4)

P143 PANELI
I/K:3321/0 Io/Jo:3324/0 J/L:3329/ Bx/By :50./150. Hk :3.25 m

KOMBİNASYON	maxNd	üstMx	altMx	üstMy	altMy	Tx	Ty
1.(G+G+G+G)	367.21	0.00	0.00	-1.28	0.48	0.00	-0.28
2.(Q+Q+Q+Q)	24.18	0.00	0.00	0.00	0.07	0.00	0.02
3.(o+Q+o+Q)	9.66	0.00	0.00	0.02	0.05	0.00	0.02
4.(Q+o+Q+o)	9.62	0.00	0.00	-0.07	0.02	0.00	-0.01
5.(Q+Q+o+Q)	12.49	0.00	0.00	-0.08	0.04	0.00	-0.01
6.(o+Q+Q+o)	13.03	0.00	0.00	0.00	0.06	0.00	0.02
7.(o+o+Q+Q)	13.04	0.00	0.00	0.00	0.04	0.00	0.01
Zemin itkisi	0.00	0.00	0.00	0.00	0.00	0.00	0.00
X-Deprem+%5	92.25	-0.37	2.08	2.30	10.08	0.53	3.81
X-Deprem-%5	107.11	-0.38	2.58	-0.41	-0.58	0.67	-0.31
Y-Deprem+%5	8.75	-0.01	0.29	-23.53	103.24	0.09	24.52
Y-Deprem-%5	8.75	0.01	-0.29	-20.31	115.89	-0.09	29.41
X-Rüzgar+%5	14.51	-0.05	0.35	0.43	1.85	0.09	0.70
X-Rüzgar-%5	16.96	-0.05	0.43	-0.03	0.05	0.12	0.01
Y-Rüzgar+%5	1.73	0.00	0.06	-3.91	20.61	0.02	5.14
Y-Rüzgar-%5	1.73	0.00	-0.06	-3.26	23.14	-0.02	6.12

Material:X1 BS30 CS420 (t,m)

BETONARME :	X-(G+Q)	X-(G+Q+E)	Y-(G+Q)	Y-(G+Q+E)
max. Nd (t) :	552.794	498.510	552.794	400.146
max. M (tm):	13.820	12.463	13.820	116.444
fcd (kg/cm²):	200.000	200.000	200.000	200.000
μ :	0.0025	0.0025	0.0025	0.0025
As (cm²):	18.750	18.750	18.750	18.750

DONATI :2x6ø16 (düşey) + ø12/15 (yatay)

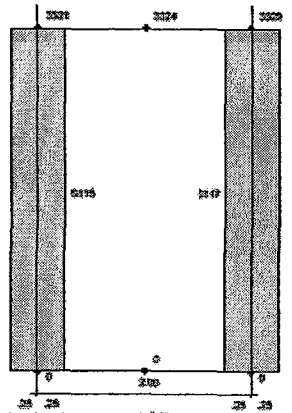

P144 PANELI
I/K:172/0 Io/Jo:220/0 J/L:277/ Bx/By :50./260. Hk :3.25 m

KOMBİNASYON	maxNd	üstMx	altMx	üstMy	altMy	Tx	Ty
1.(G+G+G+G)	851.84	0.00	0.00	-6.75	2.44	0.00	-1.32
2.(Q+Q+Q+Q)	72.44	0.00	0.00	-0.85	0.30	0.00	-0.17
3.(o+Q+o+Q)	24.11	0.00	0.00	-0.48	0.18	0.00	-0.09
4.(Q+o+Q+o)	24.20	0.00	0.00	-0.26	0.12	0.00	-0.08
5.(Q+Q+o+Q)	45.19	0.00	0.00	-0.50	0.18	0.00	-0.10
6.(o+Q+Q+o)	45.70	0.00	0.00	-0.59	0.23	0.00	-0.11
7.(o+o+Q+Q)	45.71	0.00	0.00	-0.58	0.19	0.00	-0.12
Zemin itkisi	0.00	0.00	0.00	0.00	0.00	0.00	0.00
X-Deprem+%5	51.08	-0.76	4.75	-6.50	14.31	1.23	2.40
X-Deprem-%5	52.50	-0.71	4.28	-7.40	0.38	1.13	-2.16
Y-Deprem+%5	27.68	0.03	-0.22	-61.26	259.36	-0.06	60.95
Y-Deprem-%5	29.58	-0.03	0.22	-60.19	275.90	0.06	66.27
X-Rüzgar+%5	7.36	-0.11	0.82	-1.12	2.61	0.22	0.46
X-Rüzgar-%5	7.60	-0.10	0.76	-1.28	0.27	0.20	-0.31
Y-Rüzgar+%5	4.99	0.01	-0.04	-9.93	51.26	-0.01	12.72
Y-Rüzgar-%5	5.23	-0.01	0.04	-9.70	54.56	0.01	12.80

Material:X1 BS30 CS420 (t,m)

BETONARME :	X-(G+Q)	X-(G+Q+E)	Y-(G+Q)	Y-(G+Q+E)
max. Nd (t) :	1306.485	975.359	1308.485	953.359
max. M (tm):	32.712	24.384	32.712	278.638
fcd (kg/cm²):	200.000	200.000	200.000	200.000
μ :	0.0025	0.0025	0.0025	0.0025
As (cm²):	32.500	32.500	32.500	32.500

DONATI :2x10ø16 (düşey) + ø12/15 (yatay)

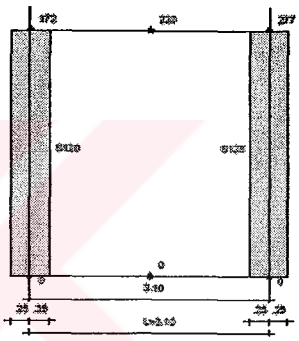

P145 PANELI
I/K:413/0 Io/Jo:490/0 J/L:571/ Bx/By :50./1012.5 Hk :3.25 m

KOMBİNASYON	maxNd	üstMx	altMx	üstMy	altMy	Tx	Ty
1.(G+G+G+G)	3362.71	0.00	0.00	-215.37	187.55	0.00	-8.56
2.(Q+Q+Q+Q)	309.14	0.00	0.00	-27.48	23.86	0.00	-1.12
3.(o+Q+o+Q)	148.98	0.00	0.00	-14.12	12.38	0.00	-0.53
4.(Q+o+Q+o)	146.94	0.00	0.00	-13.85	11.86	0.00	-0.61
5.(Q+Q+o+Q)	194.12	0.00	0.00	-18.31	15.79	0.00	-0.77
6.(o+Q+Q+o)	197.75	0.00	0.00	-18.16	15.91	0.00	-0.69
7.(o+o+Q+Q)	199.99	0.00	0.00	-19.47	16.78	0.00	-0.82
Zemin itkisi	0.00	0.00	0.00	0.00	0.00	0.00	0.00
X-Deprem+%5	0.09	-3.53	24.39	0.07	-0.08	6.42	0.00
X-Deprem-%5	0.08	-2.97	16.61	0.04	-0.05	4.20	0.00
Y-Deprem+%5	1287.28	0.32	-4.62	-4058.23	5058.53	-1.32	298.55
Y-Deprem-%5	1287.28	-0.32	4.62	-4058.23	5058.53	1.32	298.55
X-Rüzgar+%5	0.01	-0.51	4.27	0.01	-0.01	1.16	0.00
X-Rüzgar-%5	0.01	-0.42	2.96	0.01	-0.01	0.78	0.00
Y-Rüzgar+%5	216.49	0.06	-0.92	-760.49	962.64	-0.27	62.20
Y-Rüzgar-%5	216.49	-0.06	0.92	-760.48	962.64	0.27	62.20

Material:X1 BS30 CS420 (t,m)

BETONARME :	X-(G+Q)	X-(G+Q+E)	Y-(G+Q)	Y-(G+Q+E)
max. Nd (t) :	5230.418	3691.765	5230.418	4979.126
max. M (tm):	138.760	92.294	-345.496	5269.989
fcd (kg/cm²):	200.000	200.000	200.000	200.000
μ :	0.0013	0.0013	0.0010	0.0010
As (cm²):	63.281	63.281	50.625	50.625

DONATI :2x40ø16 (düşey) + ø12/15 (yatay)

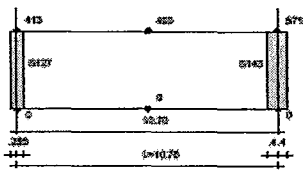

STAA-CAD V11

FİRMA :	03-23-2005
PROJE : perdeli sistem	(perdeli.ST4)

P146 PANELI
I/K:3/0 Io/Jo:11/0 J/L:24/ Bx/By :50./320.5 Hk :3.25 m

KOMBİNASYON	maxNd	üstMx	altMx	üstMy	altMy	Tx	Ty
1.(G+G+G+G)	1029.60	0.00	0.00	-6.32	4.25	0.00	-0.64
2.(Q+Q+Q+Q)	87.57	0.00	0.00	-1.42	0.72	0.00	-0.22
3.(o+Q+o+Q)	41.27	0.00	0.00	-0.63	0.37	0.00	-0.08
4.(Q+o+Q+o)	41.27	0.00	0.00	-0.73	0.33	0.00	-0.12
5.(Q+Q+o+Q)	54.58	0.00	0.00	-0.91	0.44	0.00	-0.14
6.(o+Q+Q+o)	55.07	0.00	0.00	-0.85	0.48	0.00	-0.11
7.(o+o+Q+Q)	55.43	0.00	0.00	-0.96	0.47	0.00	-0.15
Zemin itkisi	0.00	0.00	0.00	0.00	0.00	0.00	0.00
X-Deprem+%5	0.00	-0.63	2.86	0.00	-0.01	0.69	0.00
X-Deprem-%5	0.01	-0.76	5.62	0.00	0.00	1.50	0.00
Y-Deprem+%5	666.26	-0.07	1.62	-209.81	473.43	0.48	81.11
Y-Deprem-%5	666.26	0.07	-1.62	-209.81	473.43	-0.48	81.11
X-Rüzgar+%5	0.00	-0.08	0.46	0.00	0.00	0.12	0.00
X-Rüzgar-%5	0.00	-0.10	0.92	0.00	0.00	0.25	0.00
Y-Rüzgar+%5	115.11	-0.01	0.33	-38.05	93.02	0.10	16.91
Y-Rüzgar-%5	115.11	0.01	-0.33	-38.05	93.02	-0.10	16.91

Material:X1 BS30 CS420 (t,m)

BETONARME :	X-(G+Q)	X-(G+Q+E)	Y-(G+Q)	Y-(G+Q+E)
max. Nd (t) :	1581.552	1117.177	1581.552	1783.427
max. M (tm):	39.539	27.929	39.539	478.398
fcd (kg/cm²):	200.000	200.000	200.000	200.000
μ :	0.0025	0.0025	0.0025	0.0025
As (cm²):	40.063	40.063	40.063	40.063

DONATI :2x12ø16 (düşey) + ø12/15 (yatay)

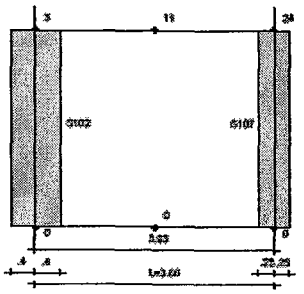

P147 PANELI
I/K:274/0 Io/Jo:328/0 J/L:410/ Bx/By :50./260. Hk :3.25 m

KOMBİNASYON	maxNd	üstMx	altMx	üstMy	altMy	Tx	Ty
1.(G+G+G+G)	851.83	0.00	0.00	-6.74	2.44	0.00	-1.32
2.(Q+Q+Q+Q)	72.43	0.00	0.00	-0.85	0.30	0.00	-0.17
3.(o+Q+o+Q)	34.08	0.00	0.00	-0.42	0.17	0.00	-0.08
4.(Q+o+Q+o)	34.22	0.00	0.00	-0.42	0.12	0.00	-0.09
5.(Q+Q+o+Q)	45.21	0.00	0.00	-0.45	0.16	0.00	-0.09
6.(o+Q+Q+o)	45.70	0.00	0.00	-0.60	0.22	0.00	-0.12
7.(o+o+Q+Q)	45.69	0.00	0.00	-0.63	0.20	0.00	-0.13
Zemin itkisi	0.00	0.00	0.00	0.00	0.00	0.00	0.00
X-Deprem+%5	51.04	-0.76	4.75	6.51	-14.32	1.23	-2.40
X-Deprem-%5	52.47	-0.71	4.38	7.40	-0.28	1.13	2.16
Y-Deprem+%5	29.57	0.03	-0.22	-60.19	275.91	-0.06	66.37
Y-Deprem-%5	27.88	-0.02	0.22	-61.26	259.37	0.06	60.96
X-Rüzgar+%5	7.35	-0.11	0.82	1.12	-2.61	0.22	-0.46
X-Rüzgar-%5	7.59	-0.10	0.76	1.28	-0.27	0.20	0.31
Y-Rüzgar+%5	5.33	0.01	-0.04	-9.70	54.56	-0.01	13.30
Y-Rüzgar-%5	4.99	-0.01	0.04	-9.93	51.26	0.01	12.72

Material:X1 BS30 CS420 (t,m)

BETONARME :	X-(G+Q)	X-(G+Q+E)	Y-(G+Q)	Y-(G+Q+E)
max. Nd (t) :	1308.458	975.308	1308.458	953.839
max. M (tm):	32.711	24.383	32.711	278.648
fcd (kg/cm²):	200.000	200.000	200.000	200.000
μ :	0.0025	0.0025	0.0025	0.0025
As (cm²):	32.500	32.500	32.500	32.500

DONATI :2x10ø16 (düşey) + ø12/15 (yatay)

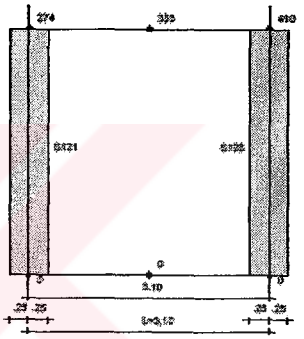

P148 PANELI
I/K:3325/0 Io/Jo:3335/0 J/L:3344/ Bx/By :50./150. Hk :2.25 m

KOMBİNASYON	maxNd	üstMx	altMx	üstMy	altMy	Tx	Ty
1.(G+G+G+G)	367.22	0.00	0.00	-1.38	0.48	0.00	-0.28
2.(Q+Q+Q+Q)	24.17	0.00	0.00	0.00	0.07	0.00	0.02
3.(o+Q+o+Q)	9.66	0.00	0.00	0.03	0.05	0.00	0.02
4.(Q+o+Q+o)	9.61	0.00	0.00	-0.07	0.02	0.00	-0.02
5.(Q+Q+o+Q)	12.50	0.00	0.00	-0.08	0.03	0.00	-0.02
6.(o+Q+Q+o)	12.01	0.00	0.00	0.00	0.06	0.00	0.02
7.(o+o+Q+Q)	12.03	0.00	0.00	0.00	0.05	0.00	0.01
Zemin itkisi	0.00	0.00	0.00	0.00	0.00	0.00	0.00
X-Deprem+%5	92.35	-0.37	2.06	-2.30	-10.08	0.53	-2.81
X-Deprem-%5	107.10	-0.38	2.58	0.41	0.58	0.67	0.31
Y-Deprem+%5	8.75	-0.01	0.29	-20.31	115.89	0.09	29.41
Y-Deprem-%5	8.75	0.01	-0.29	-23.53	100.24	-0.09	24.53
X-Rüzgar+%5	14.51	-0.05	0.35	-0.43	-1.85	0.09	-0.70
X-Rüzgar-%5	16.96	-0.05	0.43	0.03	-0.05	0.12	-0.01
Y-Rüzgar+%5	1.73	0.00	0.06	-3.25	22.14	0.02	6.12
Y-Rüzgar-%5	1.73	0.00	-0.06	-3.91	20.61	-0.02	5.14

Material:X1 BS30 CS420 (t,m)

BETONARME :	X-(G+Q)	X-(G+Q+E)	Y-(G+Q)	Y-(G+Q+E)
max. Nd (t) :	552.784	498.495	552.784	400.142
max. M (tm):	13.820	12.462	13.820	116.452
fcd (kg/cm²):	200.000	200.000	200.000	200.000
μ :	0.0025	0.0025	0.0025	0.0025
As (cm²):	18.750	18.750	18.750	18.750

DONATI :2x6ø16 (düşey) + ø12/15 (yatay)

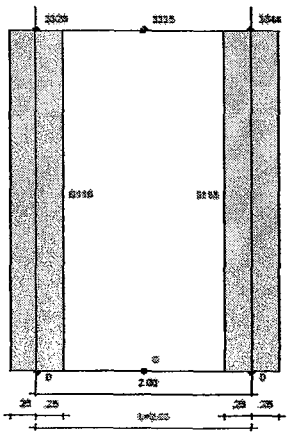

ST4-CAD V11

FİRMA :	03-23-2005
PROJE : perdeli sistem	(perdeli.ST4)

P149 PANELI
I/K:168/0 Io/Jo:214/0 J/L:273/ Bx/By :50./260. Hk :3.25 m

KOMBİNASYON	maxNd	üstMx	altMx	üstMy	altMy	Tx	Ty
1.(G+G+G+G)	857.55	0.00	0.00	-4.48	2.11	0.00	-0.73
2.(Q+Q+Q+Q)	73.64	0.00	0.00	-0.51	0.25	0.00	-0.06
3.(o+Q+o+Q)	34.65	0.00	0.00	-0.05	0.12	0.00	0.02
4.(Q+o+Q+o)	34.76	0.00	0.00	-0.45	0.12	0.00	-0.10
5.(Q+Q+o+Q)	45.91	0.00	0.00	-0.22	0.12	0.00	-0.02
6.(o+Q+Q+o)	46.55	0.00	0.00	-0.16	0.15	0.00	0.00
7.(o+o+Q+Q)	46.36	0.00	0.00	-0.61	0.21	0.00	-0.12
Zemin itkisi	0.00	0.00	0.00	0.00	0.00	0.00	0.00
X-Deprem+%5	180.52	-0.76	4.75	1.49	-40.13	1.23	-11.89
X-Deprem-%5	177.71	-0.71	4.38	15.47	-0.13	1.13	4.72
Y-Deprem+%5	29.14	0.03	-0.22	-6.15	284.39	-0.06	85.61
Y-Deprem-%5	32.46	-0.03	0.22	-22.75	236.92	0.06	65.90
X-Rüzgar+%5	26.92	-0.11	0.82	0.13	-7.33	0.22	-2.22
X-Rüzgar-%5	26.45	-0.10	0.76	2.48	-0.61	0.20	0.58
Y-Rüzgar+%5	5.27	0.01	-0.04	1.38	56.20	-0.01	17.72
Y-Rüzgar-%5	5.92	-0.01	0.04	-1.94	46.73	0.01	13.78

Material:E1 BS30 CS420 (t,m)

BETONARME :	X-(G+Q)	X-(G+Q+E)	Y-(G+Q)	Y-(G+Q+E)
max. Nd (t) :	1318.393	1111.706	1318.393	960.328
max. M (tm):	32.960	27.793	32.960	286.743
fcd (kg/cm²):	200.000	200.000	200.000	200.000
μ :	0.0025	0.0025	0.0025	0.0025
As (cm²):	32.500	32.500	32.500	32.500

DONATI :2x10ø16 (düşey) + ø12/15 (yatay)

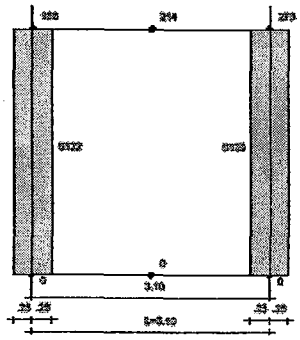

P150 PANELI
I/K:96/0 Io/Jo:129/0 J/L:168/ Bx/By :50./519.5 Hk :3.25 m

KOMBİNASYON	maxNd	üstMx	altMx	üstMy	altMy	Tx	Ty
1.(G+G+G+G)	1680.73	0.00	0.00	-10.68	9.72	0.00	-0.30
2.(Q+Q+Q+Q)	144.64	0.00	0.00	-1.17	1.10	0.00	-0.02
3.(o+Q+o+Q)	68.44	0.00	0.00	-0.50	0.58	0.00	0.02
4.(Q+o+Q+o)	67.99	0.00	0.00	-0.64	0.50	0.00	-0.04
5.(Q+Q+o+Q)	90.47	0.00	0.00	-0.79	0.68	0.00	-0.02
6.(o+Q+Q+o)	91.62	0.00	0.00	-0.84	0.81	0.00	-0.01
7.(o+o+Q+Q)	90.77	0.00	0.00	-0.65	0.67	0.00	0.01
Zemin itkisi	0.00	0.00	0.00	0.00	0.00	0.00	0.00
X-Deprem+%5	333.95	-1.32	7.57	6.83	-113.55	1.92	-32.84
X-Deprem-%5	333.63	-1.34	8.39	-22.92	18.48	2.32	-1.37
Y-Deprem+%5	356.58	-0.01	0.79	-493.84	1047.64	0.24	170.40
Y-Deprem-%5	356.21	0.01	-0.79	-458.60	890.99	-0.24	133.04
X-Rüzgar+%5	49.04	-0.18	1.28	1.29	-20.81	0.34	-6.01
X-Rüzgar-%5	48.94	-0.18	1.50	-3.62	1.32	0.41	-0.71
Y-Rüzgar+%5	60.25	0.00	0.16	-88.45	203.17	0.05	35.30
Y-Rüzgar-%5	60.11	0.00	-0.16	-81.53	171.97	-0.05	27.83

Material:E1 BS30 CS420 (t,m)

BETONARME :	X-(G+Q)	X-(G+Q+E)	Y-(G+Q)	Y-(G+Q+E)
max. Nd (t) :	2584.438	2158.997	2584.438	2181.942
max. M (tm):	64.611	53.975	64.611	1058.462
fcd (kg/cm²):	200.000	200.000	200.000	200.000
μ :	0.0012	0.0012	0.0010	0.0010
As (cm²):	32.469	32.469	25.975	25.975

DONATI :2x20ø16 (düşey) + ø12/15 (yatay)

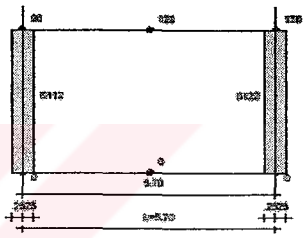

P151 PANELI
I/K:43/0 Io/Jo:67/0 J/L:96/ Bx/By :50./142.5 Hk :3.25 m

KOMBİNASYON	maxNd	üstMx	altMx	üstMy	altMy	Tx	Ty
1.(G+G+G+G)	467.17	0.00	0.00	-1.02	0.46	0.00	-0.17
2.(Q+Q+Q+Q)	40.06	0.00	0.00	-0.23	0.04	0.00	-0.06
3.(o+Q+o+Q)	18.92	0.00	0.00	-0.22	0.02	0.00	-0.06
4.(Q+o+Q+o)	18.84	0.00	0.00	-0.01	0.02	0.00	0.00
5.(Q+Q+o+Q)	25.01	0.00	0.00	-0.22	0.01	0.00	-0.07
6.(o+Q+Q+o)	25.22	0.00	0.00	-0.24	0.02	0.00	-0.07
7.(o+o+Q+Q)	25.27	0.00	0.00	0.00	0.05	0.00	0.01
Zemin itkisi	0.00	0.00	0.00	0.00	0.00	0.00	0.00
X-Deprem+%5	88.11	-0.32	1.62	-8.71	-16.97	0.40	-7.90
X-Deprem-%5	93.87	-0.35	2.47	6.65	1.63	0.65	2.55
Y-Deprem+%5	192.79	-0.02	0.51	45.97	118.75	0.15	50.68
Y-Deprem-%5	199.64	0.02	-0.51	27.74	96.67	-0.15	38.28
X-Rüzgar+%5	12.80	-0.04	0.27	-1.65	-3.11	0.07	-1.46
X-Rüzgar-%5	13.75	-0.05	0.41	0.94	0.01	0.11	0.29
Y-Rüzgar+%5	32.60	0.00	0.10	10.21	22.76	0.02	10.48
Y-Rüzgar-%5	33.93	0.00	-0.10	6.67	19.36	-0.02	8.01

Material:E1 BS30 CS420 (t,m)

BETONARME :	X-(G+Q)	X-(G+Q+E)	Y-(G+Q)	Y-(G+Q+E)
max. Nd (t) :	718.133	601.103	718.133	700.024
max. M (tm):	17.953	15.028	17.953	119.254
fcd (kg/cm²):	200.000	200.000	200.000	200.000
μ :	0.0025	0.0025	0.0025	0.0025
As (cm²):	17.813	17.813	17.813	17.813

DONATI :2x5ø16 (düşey) + ø12/15 (yatay)

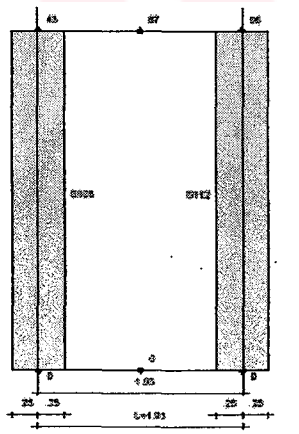

STAP-90 V11

FİRMA : | 03-23-2005

PROJE : perdeli sistem (perdeli.ST4)

P152 PANELI
I/K:10/0 Io/Jo:23/0 J/L:43/ Bx/By :50./320.5 Hk :3.25 m

KOMBİNASYON	maxNd	üstMx	altMx	üstMy	altMy	Tx	Ty
1.(G+G+G+G)	1042.71	0.00	0.00	0.18	2.19	0.00	0.73
2.(Q+Q+Q+Q)	88.54	0.00	0.00	-0.78	0.52	0.00	-0.06
3.(o+Q+o+Q)	41.63	0.00	0.00	-0.40	0.20	0.00	-0.03
4.(Q+o+Q+o)	41.83	0.00	0.00	-0.33	0.19	0.00	-0.04
5.(Q+Q+o+Q)	55.30	0.00	0.00	-0.42	0.28	0.00	-0.04
6.(o+Q+Q+o)	55.78	0.00	0.00	-0.26	0.21	0.00	-0.01
7.(o+o+Q+Q)	55.84	0.00	0.00	-0.69	0.40	0.00	-0.09
Zemin itkisi	0.00	0.00	0.00	0.00	0.00	0.00	0.00
X-Deprem+%5	222.76	-0.63	2.88	14.32	-67.34	0.69	-16.32
X-Deprem-%5	221.87	-0.76	5.62	-1.63	3.98	1.50	0.72
Y-Deprem+%5	689.68	-0.07	1.63	-194.60	507.91	0.48	96.48
Y-Deprem-%5	688.64	0.07	-1.63	-175.73	423.28	-0.48	76.17
X-Rüzgar+%5	33.15	-0.08	0.46	2.53	-12.30	0.12	-3.01
X-Rüzgar-%5	32.98	-0.10	0.92	-0.07	-0.34	0.25	-0.13
Y-Rüzgar+%5	119.97	-0.01	0.32	-34.80	99.84	0.10	20.01
Y-Rüzgar-%5	119.73	0.01	-0.32	-31.13	82.97	-0.10	15.95

Material:El BS30 CS420 (t,m)

BETONARME :	X-(G+Q)	X-(G+Q+E)	Y-(G+Q)	Y-(G+Q+E)
max. Nd (t) :	1601.449	1353.110	1601.449	1620.922
max. M (tm):	40.036	33.828	40.036	510.617
fcd (kg/cm²):	200.000	200.000	200.000	200.000
μ :	0.0025	0.0025	0.0025	0.0025
As (cm²):	40.063	40.063	40.063	40.063

DONATI :2x12ø16 (düşey) + ø12/15 (yatay)

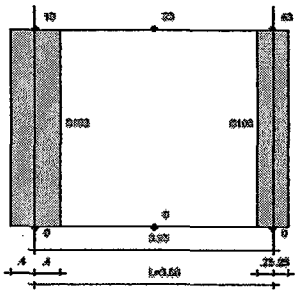

P153 PANELI
I/K:568/0 Io/Jo:653/0 J/L:654/ Bx/By :50./58. Hk :3.25 m

KOMBİNASYON	maxNd	üstMx	altMx	üstMy	altMy	Tx	Ty
1.(G+G+G+G)	204.20	0.00	0.00	-1.61	-0.09	0.00	-0.52
2.(Q+Q+Q+Q)	17.84	0.00	0.00	-0.07	0.02	0.00	-0.02
3.(o+Q+o+Q)	8.37	0.00	0.00	-0.06	0.01	0.00	-0.01
4.(Q+o+Q+o)	8.54	0.00	0.00	-0.02	0.01	0.00	0.00
5.(Q+Q+o+Q)	11.31	0.00	0.00	-0.06	0.00	0.00	-0.02
6.(o+Q+Q+o)	11.16	0.00	0.00	-0.09	0.00	0.00	-0.03
7.(o+o+Q+Q)	11.26	0.00	0.00	0.00	0.03	0.00	0.01
Zemin itkisi	0.00	0.00	0.00	0.00	0.00	0.00	0.00
X-Deprem+%5	7.96	-0.24	1.63	-6.63	-15.43	0.43	-6.79
X-Deprem-%5	23.19	-0.18	0.93	0.23	0.82	0.22	0.32
Y-Deprem+%5	174.58	0.03	-0.41	15.61	66.21	-0.12	25.18
Y-Deprem-%5	144.70	-0.03	0.41	7.46	46.92	0.12	16.73
X-Rüzgar+%5	0.37	-0.03	0.29	-1.24	-2.83	0.06	-1.25
X-Rüzgar-%5	3.75	-0.03	0.17	-0.07	-0.10	0.04	-0.05
Y-Rüzgar+%5	31.24	0.01	-0.08	3.64	13.31	-0.02	5.21
Y-Rüzgar-%5	25.38	-0.01	0.08	1.98	9.45	0.02	2.52

Material:El BS30 CS420 (t,m)

BETONARME :	X-(G+Q)	X-(G+Q+E)	Y-(G+Q)	Y-(G+Q+E)
max. Nd (t) :	314.417	214.073	314.417	47.459
max. M (tm):	7.860	5.352	7.860	-66.200
fcd (kg/cm²):	200.000	200.000	200.000	200.000
μ :	0.0025	0.0025	0.0057	0.0057
As (cm²):	7.250	7.250	16.512	16.512

DONATI :2x2ø16 (düşey) + ø12/15 (yatay)

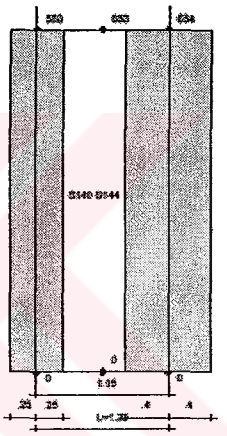

P154 PANELI
I/K:487/0 Io/Jo:569/0 J/L:568/ Bx/By :50./405. Hk :3.25 m

KOMBİNASYON	maxNd	üstMx	altMx	üstMy	altMy	Tx	Ty
1.(G+G+G+G)	1292.14	0.00	0.00	-14.73	8.71	0.00	-1.85
2.(Q+Q+Q+Q)	122.10	0.00	0.00	-1.21	0.82	0.00	-0.12
3.(o+Q+o+Q)	57.48	0.00	0.00	-0.38	0.37	0.00	0.00
4.(Q+o+Q+o)	58.17	0.00	0.00	-0.57	0.46	0.00	-0.12
5.(Q+Q+o+Q)	76.99	0.00	0.00	-1.18	0.64	0.00	-0.16
6.(o+Q+Q+o)	78.59	0.00	0.00	-0.68	0.51	0.00	-0.05
7.(o+o+Q+Q)	77.72	0.00	0.00	-0.65	0.50	0.00	-0.05
Zemin itkisi	0.00	0.00	0.00	0.00	0.00	0.00	0.00
X-Deprem+%5	119.30	-1.48	10.42	44.25	-147.03	2.75	-31.62
X-Deprem-%5	226.72	-1.21	6.59	5.45	4.94	1.65	2.20
Y-Deprem+%5	792.08	0.16	-2.28	-289.87	699.94	-0.65	126.17
Y-Deprem-%5	664.90	-0.16	2.27	-243.97	519.64	0.65	84.82
X-Rüzgar+%5	8.82	-0.21	1.83	7.71	-26.77	0.50	-5.86
X-Rüzgar-%5	26.49	-0.17	1.18	1.41	-1.32	0.31	0.03
Y-Rüzgar+%5	138.16	0.03	-0.46	-52.18	137.10	-0.13	26.13
Y-Rüzgar-%5	113.26	-0.03	0.46	-43.30	101.23	0.13	17.82

Material:El BS30 CS420 (t,m)

BETONARME :	X-(G+Q)	X-(G+Q+E)	Y-(G+Q)	Y-(G+Q+E)
max. Nd (t) :	2144.355	1294.935	2144.355	2306.322
max. M (tm):	53.609	34.973	53.609	709.465
fcd (kg/cm²):	200.000	200.000	200.000	200.000
μ :	0.0013	0.0013	0.0010	0.0010
As (cm²):	25.313	25.313	20.250	20.250

DONATI :2x16ø16 (düşey) + ø12/15 (yatay)

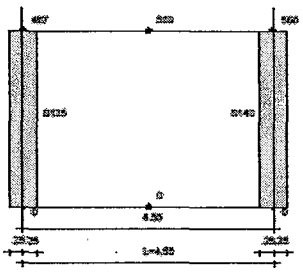

STAA-CAD V11

FİRMA :	03-23-2005
PROJE : perdeli sistem	(perdeli.ST4)

P155 PANELI
I/K:235/0 Io/Jo:409/0 J/L:487/ Bx/By :50./449.5 Hk :3.25 m

KOMBİNASYON	maxNd	üstMx	altMx	üstMy	altMy	Tx	Ty
1.(G+G+G+G)	1514.08	0.00	0.00	-11.20	8.45	0.00	-0.88
2.(Q+Q+Q+Q)	132.89	0.00	0.00	-1.19	0.93	0.00	-0.08
3.(o+Q+o+Q)	62.93	0.00	0.00	-0.90	0.67	0.00	-0.07
4.(Q+o+Q+o)	62.82	0.00	0.00	-0.27	0.25	0.00	-0.01
5.(Q+Q+o+Q)	83.12	0.00	0.00	-0.42	0.39	0.00	-0.01
6.(o+Q+Q+o)	83.67	0.00	0.00	-1.09	0.78	0.00	-0.09
7.(o+o+Q+Q)	54.71	0.00	0.00	-0.84	0.67	0.00	-0.05
Zemin itkisi	0.00	0.00	0.00	0.00	0.00	0.00	0.00
X-Deprem+%5	211.50	-1.46	9.78	139.41	-214.27	2.55	-23.03
X-Deprem-%5	234.27	-1.28	7.45	71.08	-24.55	1.90	14.32
Y-Deprem+%5	329.65	0.11	-1.37	-352.06	839.24	-0.39	149.90
Y-Deprem-%5	302.69	-0.11	1.37	-271.16	614.16	0.39	105.54
X-Rüzgar+%5	41.17	-0.21	1.70	24.48	-38.75	0.46	-4.39
X-Rüzgar-%5	44.94	-0.18	1.31	13.27	-7.00	0.35	1.92
Y-Rüzgar+%5	54.77	0.02	-0.27	-62.84	162.70	-0.08	31.04
Y-Rüzgar-%5	49.46	-0.02	0.27	-47.04	118.94	0.08	22.12

Material:E1 BS30 CS420 (t,m)

BETONARME :	X-(G+Q)	X-(G+Q+E)	Y-(G+Q)	Y-(G+Q+E)
max. Nd (t) :	2332.332	1335.469	2332.332	1976.616
max. M (tm):	58.308	33.387	58.308	848.621
fcd (kg/cm²):	200.000	200.000	200.000	200.000
μ :	0.0013	0.0013	0.0010	0.0010
As (cm²):	28.094	28.094	22.475	22.475

DONATI :2x17ø16 (düşey) + ø12/15 (yatay)

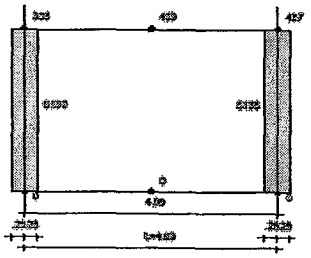

P161 PANELI
I/K:98/0 Io/Jo:132/0 J/L:172/ Bx/By :220./50. Hk :3.25 m

KOMBİNASYON	maxNd	üstMx	altMx	üstMy	altMy	Tx	Ty
1.(G+G+G+G)	752.40	4.04	-0.35	-0.05	0.00	1.13	-0.02
2.(Q+Q+Q+Q)	64.15	0.78	-0.07	-0.01	0.00	0.22	0.00
3.(o+Q+o+Q)	30.23	0.50	-0.04	0.00	0.00	0.14	0.00
4.(Q+o+Q+o)	30.23	0.23	-0.02	0.00	0.00	0.07	0.00
5.(Q+Q+o+Q)	40.02	0.51	-0.03	0.00	0.00	0.15	0.00
6.(o+Q+Q+o)	40.55	0.67	-0.07	0.00	0.00	0.18	0.00
7.(o+o+Q+Q)	40.25	0.29	-0.03	-0.01	0.00	0.08	0.00
Zemin itkisi	0.00	0.00	0.00	0.00	0.00	0.00	0.00
X-Deprem+%5	110.99	0.93	162.31	-0.05	0.55	50.23	0.15
X-Deprem-%5	108.60	1.30	161.47	-0.02	-0.04	50.08	-0.02
Y-Deprem+%5	71.08	24.13	-2.60	-0.83	4.79	6.63	1.22
Y-Deprem-%5	73.91	23.78	-1.61	-0.87	5.49	6.80	1.42
X-Rüzgar+%5	16.66	1.57	27.29	-0.01	0.10	8.85	0.03
X-Rüzgar-%5	16.26	1.63	27.15	0.00	0.00	8.86	0.00
Y-Rüzgar+%5	13.02	4.97	-0.53	-0.14	0.97	1.37	0.26
Y-Rüzgar-%5	13.59	4.89	-0.33	-0.14	1.11	1.40	0.20

Material:E1 BS30 CS420 (t,m)

BETONARME :	X-(G+Q)	X-(G+Q+E)	Y-(G+Q)	Y-(G+Q+E)
max. Nd (t) :	1155.993	705.553	1155.993	890.456
max. M (tm):	28.900	-162.735	28.900	22.261
fcd (kg/cm²):	200.000	200.000	200.000	200.000
μ :	0.0025	0.0025	0.0025	0.0025
As (cm²):	28.750	28.750	28.750	28.750

DONATI :2x9ø16 (düşey) + ø12/15 (yatay)

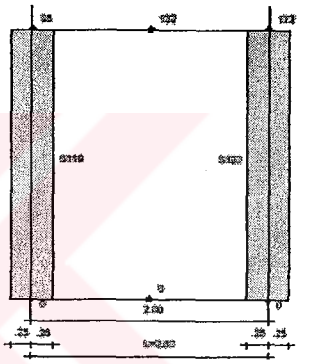

P162 PANELI
I/K:172/0 Io/Jo:221/0 J/L:274/ Bx/By :231./50. Hk :3.25 m

KOMBİNASYON	maxNd	üstMx	altMx	üstMy	altMy	Tx	Ty
1.(G+G+G+G)	751.98	0.01	0.00	-0.05	0.00	0.00	-0.02
2.(Q+Q+Q+Q)	63.69	0.00	0.00	-0.01	0.00	0.00	0.00
3.(o+Q+o+Q)	29.91	0.00	0.00	0.00	0.00	0.00	0.00
4.(Q+o+Q+o)	30.11	0.00	0.00	0.00	0.00	0.00	0.00
5.(Q+Q+o+Q)	39.78	-0.04	0.01	0.00	0.00	-0.01	0.00
6.(o+Q+Q+o)	40.10	0.00	-0.01	0.00	0.00	0.00	0.00
7.(o+o+Q+Q)	40.15	0.05	-0.01	-0.01	0.00	0.01	0.00
Zemin itkisi	0.00	0.00	0.00	0.00	0.00	0.00	0.00
X-Deprem+%5	0.01	4.65	162.07	0.00	0.00	51.61	0.00
X-Deprem-%5	0.01	5.68	162.07	0.00	0.00	51.92	0.00
Y-Deprem+%5	98.23	1.20	-0.59	-0.86	5.16	0.19	1.32
Y-Deprem-%5	98.23	-1.20	0.59	-0.86	5.16	-0.19	1.32
X-Rüzgar+%5	0.00	2.23	27.42	0.00	0.00	9.12	0.00
X-Rüzgar-%5	0.00	2.57	27.25	0.00	0.00	9.17	0.00
Y-Rüzgar+%5	18.60	0.24	-0.12	-0.14	1.04	0.04	0.28
Y-Rüzgar-%5	18.60	-0.24	0.12	-0.14	1.04	-0.04	0.28

Material:E1 BS30 CS420 (t,m)

BETONARME :	X-(G+Q)	X-(G+Q+E)	Y-(G+Q)	Y-(G+Q+E)
max. Nd (t) :	1154.677	815.683	1154.677	918.902
max. M (tm):	28.867	162.081	28.867	22.848
fcd (kg/cm²):	200.000	200.000	200.000	200.000
μ :	0.0025	0.0025	0.0025	0.0025
As (cm²):	28.875	28.875	28.875	28.875

DONATI :2x9ø16 (düşey) + ø12/15 (yatay)

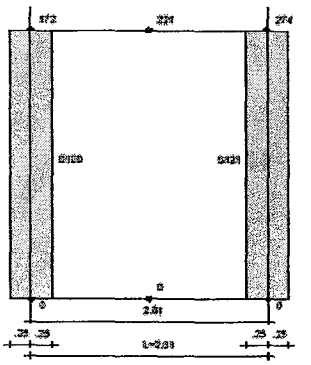

STA-CAD V11

FİRMA :	03-23-2005
PROJE : perdeli sistem	(perdeli.ST4)

P163 PANELI
I/K:274/0 Io/Jo:215/0 J/L:168/ Bx/By :230./50. Hk :3.25 m

KOMBİNASYON	maxNd	üstMx	altMx	üstMy	altMy	Tx	Ty
1.(G+G+G+G)	752.28	-4.03	0.25	-0.05	0.00	-1.13	-0.02
2.(Q+Q+Q+Q)	64.13	-0.77	0.07	-0.01	0.00	-0.22	0.00
3.(o+Q+o+Q)	30.24	-0.50	0.04	0.00	0.00	-0.14	0.00
4.(Q+o+Q+o)	30.20	-0.23	0.02	0.00	0.00	-0.06	0.00
5.(Q+Q+o+Q)	40.08	-0.49	0.05	0.00	0.00	-0.14	0.00
6.(o+Q+Q+o)	40.55	-0.67	0.05	0.00	0.00	-0.19	0.00
7.(o+o+Q+Q)	40.26	-0.30	0.02	-0.01	0.00	-0.08	0.00
Zemin itkisi	0.00	0.00	0.00	0.00	0.00	0.00	0.00
X-Deprem+%5	110.97	0.93	162.31	0.05	-0.55	50.23	-0.15
X-Deprem-%5	108.58	1.30	161.47	0.02	0.04	50.08	0.02
Y-Deprem+%5	73.92	-23.70	1.60	-0.87	5.49	-6.80	1.42
Y-Deprem-%5	71.09	-24.13	2.59	-0.83	4.79	-6.62	1.22
X-Rüzgar+%5	16.66	1.57	27.29	0.01	-0.10	3.88	-0.03
X-Rüzgar-%5	16.26	1.62	27.15	0.00	0.00	3.86	0.00
Y-Rüzgar+%5	13.59	-4.89	0.23	-0.14	1.11	-1.40	0.20
Y-Rüzgar-%5	13.02	-4.97	0.52	-0.14	0.97	-1.37	0.26

Material:Z1 BS30 CS420 (t,m)

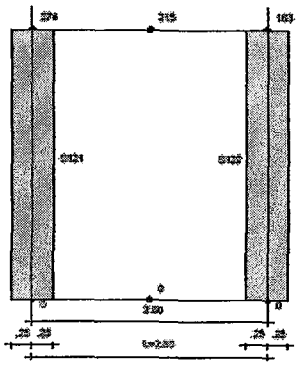

BETONARME :	X-(G+Q)	X-(G+Q+Z)	Y-(G+Q)	Y-(G+Q+Z)
max. Nd (t) :	1155.949	927.483	1155.949	890.421
max. M (tm):	28.899	162.723	28.899	22.261
fcd (kg/cm²):	200.000	200.000	200.000	200.000
μ :	0.0025	0.0025	0.0025	0.0025
As (cm²):	28.750	28.750	28.750	28.750

DONATI :2x9ø16 (düşey) + ø12/15 (yatay)

STAA-CAD V11

FİRMA : | 03-23-2005

PROJE : perdeli sistem (perdeli.ST4)

GÜÇLÜ KOLONLARIN, KAT KESME GÜVENLİĞİ (t)

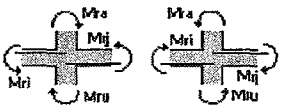

(Mra+Mru) > 1.2 x (Mri +Mrj)

Kat	Vex	Vkx	αx	Vey	Vky	αy
1	1820.34	1820.34	1.00	1924.59	1924.59	1.00
2	1808.05	1808.05	1.00	1911.24	1911.24	1.00
3	1787.06	1787.06	1.00	1888.34	1888.34	1.00
4	1757.71	1757.71	1.00	1856.52	1856.52	1.00
5	1721.04	1721.04	1.00	1817.06	1817.06	1.00
6	1678.07	1678.07	1.00	1771.04	1771.04	1.00
7	1630.04	1630.04	1.00	1719.98	1719.98	1.00
8	1578.14	1578.14	1.00	1665.61	1665.61	1.00
9	1523.26	1523.26	1.00	1609.32	1609.32	1.00
10	1467.12	1467.12	1.00	1552.22	1552.22	1.00
11	1410.85	1410.85	1.00	1495.35	1495.35	1.00
12	1355.89	1355.89	1.00	1439.84	1439.84	1.00
13	1303.30	1303.30	1.00	1386.82	1386.82	1.00
14	1253.51	1253.51	1.00	1336.74	1336.74	1.00
15	1207.14	1207.14	1.00	1290.14	1290.14	1.00
16	1165.35	1165.35	1.00	1246.81	1246.81	1.00
17	1127.92	1127.92	1.00	1207.98	1207.98	1.00
18	1095.16	1095.16	1.00	1173.76	1173.76	1.00
19	1067.87	1067.87	1.00	1144.05	1144.05	1.00
20	1045.18	1045.18	1.00	1119.40	1119.40	1.00
21	1028.15	1028.15	1.00	1098.71	1098.71	1.00
22	1016.99	1016.99	1.00	1082.65	1082.65	1.00
23	1011.24	1011.24	1.00	1071.12	1071.12	1.00
24	1009.35	1009.35	1.00	1064.66	1064.66	1.00
25	1011.02	1011.02	1.00	1061.38	1061.38	1.00
26	1013.88	1013.88	1.00	1059.65	1059.65	1.00
27	1019.09	1019.09	1.00	1059.71	1059.71	1.00
28	1024.32	1024.32	1.00	1058.77	1058.77	1.00
29	1025.86	1025.86	1.00	1058.24	1058.24	1.00
30	1022.14	1022.14	1.00	1052.06	1052.06	1.00
31	1013.16	1013.16	1.00	1038.94	1038.94	1.00
32	994.99	994.99	1.00	1016.51	1016.51	1.00
33	966.88	966.88	1.00	983.37	983.37	1.00
34	920.45	920.45	1.00	935.96	935.96	1.00
35	854.95	854.95	1.00	872.86	872.86	1.00
36	772.71	772.71	1.00	789.72	789.72	1.00
37	670.34	670.34	1.00	688.30	688.30	1.00
38	548.45	548.45	1.00	563.76	563.76	1.00
39	399.25	399.25	1.00	410.05	410.05	1.00
40	218.76	218.76	1.00	222.79	222.79	1.00

Vx/Vk> .70 KOŞULU SAĞLANMAKTADIR. GÜÇLÜ KOLONLAR, (1/α) ile ÇARPILMIŞTIR.

GÜÇLÜ KOLON KONTROLU (tm)

Yön	Kolon	Mrc	Kiriş	Mrb	AÇIKLAMA
+X	S201(169.12)+S101(170.38)	339.51	K102(36.81)	44.2	Panel başlığı
-X	S201(169.12)+S101(170.38)	339.51	K102(45.25)	54.35	Panel başlığı
+Y	S201(121.99)+S101(117.94)	239.93	K142(26.81)	32.17	Panel başlığı
-Y	S201(121.99)+S101(117.94)	239.93	K142(60.73)	72.87	Panel başlığı
+X	S202(175.44)+S102(176.23)	351.67	K102(40.17)+K103(36.81)	92.41	Panel başlığı
-X	S202(175.44)+S102(176.23)	351.67	K102(36.81)+K103(40.17)	92.42	Panel başlığı
+Y	S202(122.52)+S102(118.39)	240.92	K146(39.8)	47.76	Panel başlığı
-Y	S202(122.52)+S102(118.39)	240.92	K146(50.95)	61.14	Panel başlığı
+X	S203(169.12)+S103(170.38)	339.5	K103(45.25)	54.33	Panel başlığı
-X	S203(169.12)+S103(170.38)	339.5	K103(36.81)	44.21	Panel başlığı
+Y	S203(121.98)+S103(117.93)	239.91	K152(36.81)	44.17	Panel başlığı
-Y	S203(121.98)+S103(117.93)	239.91	K152(40.17)	48.2	Panel başlığı
+X	S204(164.54)+S104(161.43)	325.98	K105(41.41)	49.73	✓
-X	S204(164.54)+S104(161.43)	325.98	K105(50.95)	61.19	✓
+Y	S204(158.24)+S104(154.61)	312.85	K134(41.41)	49.69	✓
-Y	S204(158.24)+S104(154.61)	312.85	K134(50.95)	61.14	✓
+X	S205(164.54)+S105(161.43)	325.98	K106(50.95)	61.18	✓
-X	S205(164.54)+S105(161.43)	325.98	K106(41.41)	49.74	✓
+Y	S205(158.23)+S105(154.61)	312.84	K158(41.41)	49.69	✓
-Y	S205(158.23)+S105(154.61)	312.84	K158(50.95)	61.14	✓
+X	S206(38.25)+S106(38.39)	76.65	K107(50.95)	61.22	Panel başlığı
-X	S206(38.25)+S106(38.39)	76.65	K107(41.41)	49.79	Panel başlığı
+Y	S206(35.07)+S106(35.51)	70.58	K141(41.41)+K142(39.8)	97.45	Panel başlığı
-Y	S206(35.07)+S106(35.51)	70.58	K141(50.95)+K142(50.95)	122.28	Panel başlığı
+X	S207(39.88)+S107(40.07)	79.95	K107(50.95)+K108(41.41)	110.87	Panel başlığı
-X	S207(39.88)+S107(40.07)	79.95	K107(41.41)+K108(50.95)	110.88	Panel başlığı
+Y	S207(39.39)+S107(39.28)	78.67	K146(39.8)	47.76	Panel başlığı
-Y	S207(39.39)+S107(39.28)	78.67	K146(50.95)	61.14	Panel başlığı
+X	S208(38.25)+S108(38.39)	76.65	K108(50.95)	61.22	Panel başlığı
-X	S208(38.25)+S108(38.39)	76.65	K108(41.41)	49.79	Panel başlığı
+Y	S208(35.07)+S108(35.51)	70.58	K151(41.41)+K152(39.8)	97.45	Panel başlığı
-Y	S208(35.07)+S108(35.51)	70.58	K151(50.95)+K152(50.95)	122.28	Panel başlığı

FİRMA : 03-23-2005

PROJE : perdeli sistem (perdeli.ST4)

GÜÇLÜ KOLON KONTROLU (tm)

Yön	Kolon	Mrc	Kiriş	Mrb	AÇIKLAMA
+X	S209(137.48)+S109(136.35)	273.83	K109(50.95)	61.16	Panel başlığı
-X	S209(137.48)+S109(136.35)	273.83	K109(41.41)	49.74	Panel başlığı
+Y	S209(177.96)+S109(177.29)	355.25	K132(26.81)	32.17	Panel başlığı
-Y	S209(177.96)+S109(177.29)	355.25	K132(50.16)	60.19	Panel başlığı
+X	S210(35.17)+S110(37.73)	72.89	K109(50.95)+K110(26.81)	93.36	Panel başlığı
-X	S210(35.17)+S110(37.73)	72.89	K109(41.41)+K110(50.16)	109.92	Panel başlığı
+Y	S210(37.87)+S110(38.42)	76.3	K134(50.95)	61.14	Panel başlığı
-Y	S210(37.87)+S110(38.42)	76.3	K134(41.41)	49.69	Panel başlığı
+X	S211(38.41)+S111(38.72)	77.13	K110(50.95)	61.21	Panel başlığı
-X	S211(38.41)+S111(38.72)	77.13	K110(41.41)	49.78	Panel başlığı
+Y	S211(36.45)+S111(36.87)	73.32	K140(26.81)+K141(50.95)	93.31	Panel başlığı
-Y	S211(36.45)+S111(36.87)	73.32	K140(50.16)+K141(41.41)	109.88	Panel başlığı
+X	S212(38.41)+S112(38.72)	77.13	K111(50.95)	61.21	Panel başlığı
-X	S212(38.41)+S112(38.72)	77.13	K111(41.41)	49.78	Panel başlığı
+Y	S212(36.45)+S112(36.87)	73.31	K150(26.81)+K151(50.95)	93.31	Panel başlığı
-Y	S212(36.45)+S112(36.87)	73.31	K150(50.16)+K151(41.41)	109.88	Panel başlığı
+X	S213(35.17)+S113(37.73)	72.89	K111(50.95)+K112(26.81)	93.36	Panel başlığı
-X	S213(35.17)+S113(37.73)	72.89	K111(41.41)+K112(50.16)	109.92	Panel başlığı
+Y	S213(37.87)+S113(38.42)	76.3	K158(50.95)	61.14	Panel başlığı
-Y	S213(37.87)+S113(38.42)	76.3	K158(41.41)	49.69	Panel başlığı
+X	S214(137.48)+S114(136.35)	273.83	K112(50.95)	61.16	Panel başlığı
-X	S214(137.48)+S114(136.35)	273.83	K112(41.41)	49.74	Panel başlığı
+Y	S214(177.96)+S114(177.3)	355.26	K160(26.81)	32.17	Panel başlığı
-Y	S214(177.96)+S114(177.3)	355.26	K160(50.16)	60.19	Panel başlığı
+X	S215(35.39)+S115(35.21)	70.61	K113(50.95)	61.16	Panel başlığı
-X	S215(35.39)+S115(35.21)	70.61	K113(41.41)	49.74	Panel başlığı
+Y	S215(36.56)+S115(36.34)	72.9	K143(26.81)	32.17	Panel başlığı
-Y	S215(36.56)+S115(36.34)	72.9	K143(50.16)	60.19	Panel başlığı
+X	S216(35.4)+S116(35.21)	70.61	K113(50.95)	61.16	Panel başlığı
-X	S216(35.4)+S116(35.21)	70.61	K113(41.41)	49.74	Panel başlığı
+Y	S216(36.56)+S116(36.34)	72.9	K148(26.81)	32.17	Panel başlığı
-Y	S216(36.56)+S116(36.34)	72.9	K148(50.16)	60.19	Panel başlığı
+X	S217(35.77)+S117(35.26)	71.04	K114(50.95)	61.16	Panel başlığı
-X	S217(35.77)+S117(35.26)	71.04	K114(41.41)	49.74	Panel başlığı
+Y	S217(38.68)+S117(35.94)	74.62	K143(26.81)	32.17	Panel başlığı
-Y	S217(38.68)+S117(35.94)	74.62	K143(50.16)	60.19	Panel başlığı
+X	S218(35.77)+S118(35.26)	71.04	K114(50.95)	61.16	Panel başlığı
-X	S218(35.77)+S118(35.26)	71.04	K114(41.41)	49.74	Panel başlığı
+Y	S218(38.68)+S118(35.94)	74.62	K148(26.81)	32.17	Panel başlığı
-Y	S218(38.68)+S118(35.94)	74.62	K148(50.16)	60.19	Panel başlığı
+X	S219(38.3)+S119(38.35)	76.65	K161(50.95)	61.21	Panel başlığı
-X	S219(38.3)+S119(38.35)	76.65	K161(41.41)	49.78	Panel başlığı
+Y	S219(39.56)+S119(39.75)	79.31	K139(50.95)+K140(26.81)	93.31	Panel başlığı
-Y	S219(39.56)+S119(39.75)	79.31	K139(41.41)+K140(50.16)	109.88	Panel başlığı
+X	S220(39.45)+S120(39.6)	79.06	K161(26.81)+K162(50.95)	93.36	Panel başlığı
-X	S220(39.45)+S120(39.6)	79.06	K161(50.16)+K162(41.41)	109.92	Panel başlığı
+Y	S220(40.45)+S120(40.73)	81.21	K144(50.95)	61.14	Panel başlığı
-Y	S220(40.45)+S120(40.73)	81.21	K144(41.41)	49.69	Panel başlığı
+X	S221(39.45)+S121(39.61)	79.06	K162(26.81)+K163(50.95)	93.36	Panel başlığı
-X	S221(39.45)+S121(39.61)	79.06	K162(50.16)+K163(41.41)	109.92	Panel başlığı
+Y	S221(40.45)+S121(40.73)	81.21	K147(50.95)	61.14	Panel başlığı
-Y	S221(40.45)+S121(40.73)	81.21	K147(41.41)	49.69	Panel başlığı
+X	S222(38.3)+S122(38.35)	76.65	K163(50.95)	61.21	Panel başlığı
-X	S222(38.3)+S122(38.35)	76.65	K163(41.41)	49.78	Panel başlığı
+Y	S222(39.56)+S122(39.75)	79.31	K149(50.95)+K150(26.81)	93.31	Panel başlığı
-Y	S222(39.56)+S122(39.75)	79.31	K149(41.41)+K150(50.16)	109.88	Panel başlığı
+X	S223(134.37)+S123(137.17)	271.54	K115(50.95)	61.23	Panel başlığı
-X	S223(134.37)+S123(137.17)	271.54	K115(41.41)	49.76	Panel başlığı
+Y	S223(177.68)+S123(178.14)	355.82	K131(41.41)+K132(50.16)	109.88	Panel başlığı
-Y	S223(177.68)+S123(178.14)	355.82	K131(50.16)+K132(26.81)	92.36	Panel başlığı
+X	S224(37.5)+S124(37.76)	75.26	K115(50.95)+K116(41.41)	110.87	Panel başlığı
-X	S224(37.5)+S124(37.76)	75.26	K115(41.41)+K116(50.16)	109.91	Panel başlığı
+Y	S224(40.45)+S124(40.59)	81.03	K137(50.16)	60.19	Panel başlığı
-Y	S224(40.45)+S124(40.59)	81.03	K137(26.81)	32.17	Panel başlığı
+X	S225(38.63)+S125(38.81)	77.44	K116(50.95)+K117(41.41)	110.87	Panel başlığı
-X	S225(38.63)+S125(38.81)	77.44	K116(41.41)+K117(50.16)	109.91	Panel başlığı
+Y	S225(39.08)+S125(39.09)	78.17	K139(50.16)	60.19	Panel başlığı
-Y	S225(39.08)+S125(39.09)	78.17	K139(26.81)	32.17	Panel başlığı
+X	S226(40.34)+S126(40.44)	80.79	K117(50.95)+K118(41.41)	110.87	Panel başlığı
-X	S226(40.34)+S126(40.44)	80.79	K117(41.41)+K118(50.16)	109.91	Panel başlığı
+Y	S226(38.77)+S126(38.66)	77.42	K144(50.16)	60.19	Panel başlığı
-Y	S226(38.77)+S126(38.66)	77.42	K144(26.81)	32.17	Panel başlığı

FİRMA :

03-23-2005

PROJE : perdeli sistem

(perdeli.ST4)

GÜÇLÜ KOLON KONTROLU (tm)

Yön	Kolon	Mrc	Kiriş	Mrb	AÇIKLAMA
+X	S227(40.08)+S127(40.23)	80.25	K118(50.95)+K119(41.41)	110.87	Panel başlığı
-X	S227(40.08)+S127(40.23)	80.25	K118(41.41)+K119(50.16)	109.91	Panel başlığı
+Y	S227(38.81)+S127(38.83)	77.64	K145(50.16)	60.19	Panel başlığı
-Y	S227(38.81)+S127(38.83)	77.64	K145(26.81)	32.17	Panel başlığı
+X	S228(40.34)+S128(40.44)	80.78	K119(50.95)+K120(41.41)	110.87	Panel başlığı
-X	S228(40.34)+S128(40.44)	80.78	K119(41.41)+K120(50.16)	109.91	Panel başlığı
+Y	S228(38.77)+S128(38.66)	77.42	K147(50.16)	60.19	Panel başlığı
-Y	S228(38.77)+S128(38.66)	77.42	K147(26.81)	32.17	Panel başlığı
+X	S229(38.63)+S129(38.81)	77.44	K120(50.95)+K121(41.41)	110.87	Panel başlığı
-X	S229(38.63)+S129(38.81)	77.44	K120(41.41)+K121(50.16)	109.91	Panel başlığı
+Y	S229(39.08)+S129(39.09)	78.16	K149(50.16)	60.19	Panel başlığı
-Y	S229(39.08)+S129(39.09)	78.16	K149(26.81)	32.17	Panel başlığı
+X	S230(37.5)+S130(37.76)	75.26	K121(50.95)+K122(41.41)	110.87	Panel başlığı
-X	S230(37.5)+S130(37.76)	75.26	K121(41.41)+K122(50.16)	109.91	Panel başlığı
+Y	S230(40.44)+S130(40.59)	81.03	K155(50.16)	60.19	Panel başlığı
-Y	S230(40.44)+S130(40.59)	81.03	K155(26.81)	32.17	Panel başlığı
+X	S231(134.37)+S131(137.17)	271.53	K122(50.95)	61.22	Panel başlığı
-X	S231(134.37)+S131(137.17)	271.53	K122(41.41)	49.76	Panel başlığı
+Y	S231(177.68)+S131(178.13)	355.81	K159(41.41)+K160(50.16)	109.88	Panel başlığı
-Y	S231(177.68)+S131(178.13)	355.81	K159(50.16)+K160(26.81)	92.36	Panel başlığı
+X	S232(151.84)+S132(145.32)	297.16	K123(50.95)	61.19	Panel başlığı
-X	S232(151.84)+S132(145.32)	297.16	K123(41.41)	49.73	Panel başlığı
+Y	S232(177.34)+S132(176.85)	354.19	K131(50.95)	61.14	Panel başlığı
-Y	S232(177.34)+S132(176.85)	354.19	K131(41.41)	49.69	Panel başlığı
+X	S233(38.26)+S133(37.76)	76.02	K123(50.95)+K124(50.95)	122.32	Panel başlığı
-X	S233(38.26)+S133(37.76)	76.02	K123(41.41)+K124(41.41)	99.42	Panel başlığı
+Y	S233(37.38)+S133(37.75)	75.13	K133(41.41)	49.69	Panel başlığı
-Y	S233(37.38)+S133(37.75)	75.13	K133(50.95)	61.14	Panel başlığı
+X	S234(40.84)+S134(40.88)	81.72	K124(50.95)	61.22	Panel başlığı
-X	S234(40.84)+S134(40.88)	81.72	K124(41.41)	49.78	Panel başlığı
+Y	S234(36.52)+S134(36.92)	73.45	K136(50.95)+K137(41.41)	110.83	Panel başlığı
-Y	S234(36.52)+S134(36.92)	73.45	K136(41.41)+K137(50.95)	110.83	Panel başlığı
+X	S235(40.84)+S135(40.88)	81.72	K125(50.95)	61.23	Panel başlığı
-X	S235(40.84)+S135(40.88)	81.72	K125(41.41)		
+Y	S235(36.52)+S135(36.91)	73.44	K154(50.95)+K155(41.41)	110.83	Panel başlığı
-Y	S235(36.52)+S135(36.91)	73.44	K154(41.41)+K155(50.95)	110.83	Panel başlığı
+X	S236(38.26)+S136(37.76)	76.02	K125(50.95)+K126(50.95)	122.32	Panel başlığı
-X	S236(38.26)+S136(37.76)	76.02	K125(41.41)+K126(41.41)	99.42	Panel başlığı
+Y	S236(37.38)+S136(37.75)	75.13	K157(41.41)	49.69	Panel başlığı
-Y	S236(37.38)+S136(37.75)	75.13	K157(50.95)	61.14	Panel başlığı
+X	S237(151.85)+S137(145.34)	297.19	K126(50.95)	61.19	Panel başlığı
-X	S237(151.85)+S137(145.34)	297.19	K126(41.41)	49.73	Panel başlığı
+Y	S237(177.34)+S137(176.86)	354.2	K159(50.95)	61.14	Panel başlığı
-Y	S237(177.34)+S137(176.86)	354.2	K159(41.41)	49.69	Panel başlığı
+X	S238(169.21)+S138(166.87)	336.08	K127(41.41)	49.74	✓
-X	S238(169.21)+S138(166.87)	336.08	K127(50.95)	61.18	✓
+Y	S238(157.95)+S138(154.97)	312.92	K133(50.95)	61.14	✓
-Y	S238(157.95)+S138(154.97)	312.92	K133(41.41)	49.69	✓
+X	S239(39.94)+S139(40.3)	80.24	K127(50.95)	61.22	Panel başlığı
-X	S239(39.94)+S139(40.3)	80.24	K127(41.41)	49.78	Panel başlığı
+Y	S239(29.17)+S139(28.56)	57.73	K135(50.95)+K136(41.41)	110.83	Panel başlığı
-Y	S239(29.17)+S139(28.56)	57.73	K135(41.41)+K136(50.95)	110.83	Panel başlığı
+X	S240(39.94)+S140(40.3)	80.24	K128(41.41)	49.78	Panel başlığı
-X	S240(39.94)+S140(40.3)	80.24	K128(50.95)	61.22	Panel başlığı
+Y	S240(29.17)+S140(28.55)	57.72	K153(50.95)+K154(41.41)	110.83	Panel başlığı
-Y	S240(29.17)+S140(28.55)	57.72	K153(41.41)+K154(50.95)	110.83	Panel başlığı
+X	S241(169.22)+S141(166.88)	336.11	K128(50.95)	61.19	✓
-X	S241(169.22)+S141(166.88)	336.11	K128(41.41)	49.73	✓
+Y	S241(157.96)+S141(154.98)	312.94	K157(50.95)	61.14	✓
-Y	S241(157.96)+S141(154.98)	312.94	K157(41.41)	49.69	✓
+X	S242(178.08)+S142(178.11)	356.19	K129(26.81)	32.22	Panel başlığı
-X	S242(178.08)+S142(178.11)	356.19	K129(50.95)	61.18	Panel başlığı
+Y	S242(120.79)+S142(116.26)	237.05	K135(50.95)	61.14	Panel başlığı
-Y	S242(120.79)+S142(116.26)	237.05	K135(41.41)	49.69	Panel başlığı
+X	S243(178.18)+S143(178.02)	356.2	K129(60.73)+K130(26.81)	105.08	Panel başlığı
-X	S243(178.18)+S143(178.02)	356.2	K129(26.81)+K130(60.73)	105.09	Panel başlığı
+Y	S243(140.91)+S143(132.31)	273.22	K145(41.41)	49.69	Panel başlığı
-Y	S243(140.91)+S143(132.31)	273.22	K145(50.95)	61.14	Panel başlığı
+X	S244(178.08)+S144(178.11)	356.19	K130(50.95)	61.16	Panel başlığı
-X	S244(178.08)+S144(178.11)	356.19	K130(26.81)	32.23	Panel başlığı
+Y	S244(120.78)+S144(116.24)	237.02	K153(26.81)	32.17	Panel başlığı
-Y	S244(120.78)+S144(116.24)	237.02	K153(60.73)	72.87	Panel başlığı

STAA-CAD V11

FİRMA :	03-23-2005
PROJE : perdeli sistem	(perdeli.ST4)

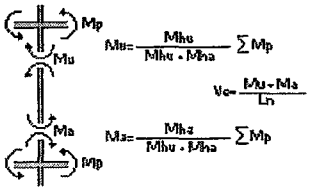

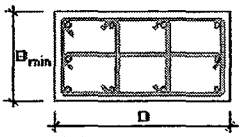

Ln : Kolon kirişler arası serbest yüksekliği
Hk : Kolon kat yüksekliği
Fk : Kolon boyunca etriye alan toplamı
Letr : hesap doğrultusundaki etriye boylarının toplamı

$$\rho = \frac{Fk \cdot Letr}{Ac \cdot Hk} \geq 0{,}0025$$

$$Vr = 0{,}65 \cdot Ac \cdot f_{ctd} + \rho \cdot Ac \cdot f_{yd} > Ve$$

Dikdörtgen kolonlarda $Letr \cong D$ $Ac = B \cdot D$

$$\rho = \frac{Fk \cdot D}{B \cdot D \cdot Hk} = \frac{Fk}{B \cdot Hk}$$

$$Vr = 0{,}65 \cdot B \cdot D \cdot f_{ctd} + Fk \cdot D \cdot f_{yd} / Hk > Ve$$

KOLONLARIN KESME GÜVENLİK KONTROLÜ

Kolon	+X Mp / Mc / Mr	−X Mp / Mc / Mr	+Y Mp / Mc / Mr	−Y Mp / Mc / Mr
S101 Lnx= 2.45 Lny= 3.25	169.12 36.81 ┼ Mu= 18.47 170.38 0.00 ┼ Ma=170.38 0.00 Ve= 77.08 Vr=190.45 ✓	169.12 -45.25 ┼ Mu= 22.71 170.38 0.00 ┼ Ma=170.38 0.00 Ve= 78.81 Vr=190.45 ✓	121.99 0.00 ┼ Mu= 0.00 117.94 0.00 ┼ Ma=117.94 0.00 Ve= 36.29 Vr=190.45 ✓	121.99 0.00 ┼ Mu= 0.00 117.94 0.00 ┼ Ma=117.94 0.00 Ve= 36.29 Vr=190.45 ✓
S102 Lnx= 2.45 Lny= 3.25	175.44 76.98 ┼ Mu= 38.58 176.23 0.00 ┼ Ma=176.23 0.00 Ve= 87.67 Vr=190.45 ✓	175.44 -76.98 ┼ Mu= 38.58 176.23 0.00 ┼ Ma=176.23 0.00 Ve= 87.67 Vr=190.45 ✓	122.53 0.00 ┼ Mu= 0.00 118.39 0.00 ┼ Ma=118.39 0.00 Ve= 36.43 Vr=190.45 ✓	122.53 0.00 ┼ Mu= 0.00 118.39 0.00 ┼ Ma=118.39 0.00 Ve= 36.43 Vr=190.45 ✓
S103 Lnx= 2.45 Lny= 3.25	169.12 45.25 ┼ Mu= 22.71 170.38 0.00 ┼ Ma=170.38 0.00 Ve= 78.81 Vr=190.45 ✓	169.12 -36.81 ┼ Mu= 18.47 170.38 0.00 ┼ Ma=170.38 0.00 Ve= 77.08 Vr=190.45 ✓	121.98 0.00 ┼ Mu= 0.00 117.93 0.00 ┼ Ma=117.93 0.00 Ve= 36.29 Vr=190.45 ✓	121.98 0.00 ┼ Mu= 0.00 117.93 0.00 ┼ Ma=117.93 0.00 Ve= 36.29 Vr=190.45 ✓
S104 Lnx= 2.35 Lny= 2.35	164.54 41.44 ┼ Mu= 20.52 161.43 0.00 ┼ Ma=161.43 0.00 Ve= 77.43 Vr=190.45 ✓	164.54 -50.99 ┼ Mu= 25.25 161.43 0.00 ┼ Ma=161.43 0.00 Ve= 79.44 Vr=190.45 ✓	158.23 41.41 ┼ Mu= 20.46 154.61 0.00 ┼ Ma=154.61 0.00 Ve= 74.50 Vr=190.45 ✓	158.23 -50.95 ┼ Mu= 25.18 154.61 0.00 ┼ Ma=154.61 0.00 Ve= 76.51 Vr=190.45 ✓
S105 Lnx= 2.35 Lny= 2.35	164.54 50.98 ┼ Mu= 25.25 161.43 0.00 ┼ Ma=161.43 0.00 Ve= 79.44 Vr=190.45 ✓	164.54 -41.45 ┼ Mu= 20.53 161.43 0.00 ┼ Ma=161.43 0.00 Ve= 77.43 Vr=190.45 ✓	158.23 41.41 ┼ Mu= 20.46 154.61 0.00 ┼ Ma=154.61 0.00 Ve= 74.50 Vr=190.45 ✓	158.23 -50.95 ┼ Mu= 25.18 154.61 0.00 ┼ Ma=154.61 0.00 Ve= 76.50 Vr=190.45 ✓
S106 Lnx= 3.25 Lny= 3.25	38.25 0.00 ┼ Mu= 0.00 38.39 0.00 ┼ Ma= 38.39 0.00 Ve= 11.81 Vr= 77.98 ✓	38.25 0.00 ┼ Mu= 0.00 38.39 0.00 ┼ Ma= 38.39 0.00 Ve= 11.81 Vr= 77.98 ✓	35.07 0.00 ┼ Mu= 0.00 35.51 0.00 ┼ Ma= 35.51 0.00 Ve= 10.93 Vr= 77.98 ✓	35.07 0.00 ┼ Mu= 0.00 35.51 0.00 ┼ Ma= 35.51 0.00 Ve= 10.93 Vr= 77.98 ✓
S107 Lnx= 3.25 Lny= 3.25	39.88 0.00 ┼ Mu= 0.00 40.07 0.00 ┼ Ma= 40.07 0.00 Ve= 12.33 Vr= 77.98 ✓	39.88 0.00 ┼ Mu= 0.00 40.07 0.00 ┼ Ma= 40.07 0.00 Ve= 12.33 Vr= 77.98 ✓	39.39 0.00 ┼ Mu= 0.00 39.28 0.00 ┼ Ma= 39.28 0.00 Ve= 12.09 Vr= 77.98 ✓	39.39 0.00 ┼ Mu= 0.00 39.28 0.00 ┼ Ma= 39.28 0.00 Ve= 12.09 Vr= 77.98 ✓
S108 Lnx= 3.25 Lny= 3.25	38.25 0.00 ┼ Mu= 0.00 38.39 0.00 ┼ Ma= 38.39 0.00 Ve= 11.81 Vr= 77.98 ✓	38.25 0.00 ┼ Mu= 0.00 38.39 0.00 ┼ Ma= 38.39 0.00 Ve= 11.81 Vr= 77.98 ✓	35.07 0.00 ┼ Mu= 0.00 35.51 0.00 ┼ Ma= 35.51 0.00 Ve= 10.93 Vr= 77.98 ✓	35.07 0.00 ┼ Mu= 0.00 35.51 0.00 ┼ Ma= 35.51 0.00 Ve= 10.93 Vr= 77.98 ✓
S109 Lnx= 3.25 Lny= 2.35	137.48 0.02 ┼ Mu= 0.01 136.35 0.00 ┼ Ma=136.35 0.00 Ve= 41.96 Vr=190.45 ✓	137.48 -0.04 ┼ Mu= 0.02 136.35 0.00 ┼ Ma=136.35 0.00 Ve= 41.96 Vr=190.45 ✓	177.96 26.81 ┼ Mu= 13.38 177.29 0.00 ┼ Ma=177.29 0.00 Ve= 51.14 Vr=190.45 ✓	177.96 -50.16 ┼ Mu= 25.03 177.29 0.00 ┼ Ma=177.29 0.00 Ve= 86.10 Vr=190.45 ✓
S110 Lnx= 2.25 Lny= 2.35	35.17 0.04 ┼ Mu= 0.02 37.73 0.00 ┼ Ma= 37.73 0.00 Ve= 11.61 Vr= 77.98 ✓	35.17 -0.02 ┼ Mu= 0.02 37.73 0.00 ┼ Ma= 37.73 0.00 Ve= 11.61 Vr= 77.98 ✓	37.87 50.95 ┼ Mu= 25.66 38.43 0.00 ┼ Ma= 38.43 0.00 Ve= 27.27 Vr= 77.98 ✓	37.87 -41.41 ┼ Mu= 20.85 38.43 0.00 ┼ Ma= 38.43 0.00 Ve= 25.23 Vr= 77.98 ✓

ST4-CAD V11

FİRMA : | 03-23-2005

PROJE : perdeli sistemperdeli.ST4) (perdeli.ST4)

KOLONLARIN KESME GÜVENLİK KONTROLU

Kolon	+X Mp Mc Mr	-X Mp Mc Mr	+Y Mp Mc Mr	-Y Mp Mc Mr
S111 Lnx= 3.25 Lny= 3.25	38.41 0.00 ┼ Mu= 0.00 38.72 0.00 ┼ Ma= 38.72 0.00 Ve= 11.91 Vr= 77.98 ✓	38.41 0.00 ┼ Mu= 0.00 38.72 0.00 ┼ Ma= 38.72 0.00 Ve= 11.91 Vr= 77.98 ✓	36.45 0.00 ┼ Mu= 0.00 36.87 0.00 ┼ Ma= 36.87 0.00 Ve= 11.24 Vr= 77.98 ✓	36.45 0.00 ┼ Mu= 0.00 36.87 0.00 ┼ Ma= 36.87 0.00 Ve= 11.24 Vr= 77.98 ✓
S112 Lnx= 3.25 Lny= 3.25	38.41 0.00 ┼ Mu= 0.00 38.72 0.00 ┼ Ma= 38.72 0.00 Ve= 11.91 Vr= 77.98 ✓	38.41 0.00 ┼ Mu= 0.00 38.72 0.00 ┼ Ma= 38.72 0.00 Ve= 11.91 Vr= 77.98 ✓	36.45 0.00 ┼ Mu= 0.00 36.87 0.00 ┼ Ma= 36.87 0.00 Ve= 11.24 Vr= 77.98 ✓	36.45 0.00 ┼ Mu= 0.00 36.87 0.00 ┼ Ma= 36.87 0.00 Ve= 11.24 Vr= 77.98 ✓
S113 Lnx= 3.25 Lny= 2.35	35.17 0.04 ┼ Mu= 0.02 37.73 0.00 ┼ Ma= 37.73 0.00 Ve= 11.61 Vr= 77.98 ✓	35.17 -0.03 ┼ Mu= 0.02 37.73 0.00 ┼ Ma= 37.73 0.00 Ve= 11.61 Vr= 77.98 ✓	37.87 50.95 ┼ Mu= 25.66 38.43 0.00 ┼ Ma= 38.43 0.00 Ve= 27.27 Vr= 77.98 ✓	37.87 -41.41 ┼ Mu= 20.85 38.43 0.00 ┼ Ma= 38.43 0.00 Ve= 25.23 Vr= 77.98 ✓
S114 Lnx= 3.25 Lny= 2.35	137.48 0.02 ┼ Mu= 0.01 136.35 0.00 ┼ Ma=136.35 0.00 Ve= 41.96 Vr=190.45 ✓	137.48 -0.04 ┼ Mu= 0.02 136.35 0.00 ┼ Ma=136.35 0.00 Ve= 41.96 Vr=190.45 ✓	177.96 26.81 ┼ Mu= 13.38 177.30 0.00 ┼ Ma=177.30 0.00 Ve= 81.14 Vr=190.45 ✓	177.96 -50.16 ┼ Mu= 25.03 177.30 0.00 ┼ Ma=177.30 0.00 Ve= 86.10 Vr=190.45 ✓
S115 Lnx= 3.25 Lny= 3.25	35.39 0.00 ┼ Mu= 0.00 35.21 0.00 ┼ Ma= 35.21 0.00 Ve= 10.83 Vr= 77.98 ✓	35.39 0.00 ┼ Mu= 0.00 35.21 0.00 ┼ Ma= 35.21 0.00 Ve= 10.83 Vr= 77.98 ✓	36.56 0.00 ┼ Mu= 0.00 36.34 0.00 ┼ Ma= 36.34 0.00 Ve= 11.18 Vr= 77.98 ✓	36.56 0.00 ┼ Mu= 0.00 36.34 0.00 ┼ Ma= 36.34 0.00 Ve= 11.18 Vr= 77.98 ✓
S116 Lnx= 3.25 Lny= 3.25	35.40 0.00 ┼ Mu= 0.00 35.21 0.00 ┼ Ma= 35.21 0.00 Ve= 10.83 Vr= 77.98 ✓	35.40 0.00 ┼ Mu= 0.00 35.21 0.00 ┼ Ma= 35.21 0.00 Ve= 10.83 Vr= 77.98 ✓	36.56 0.00 ┼ Mu= 0.00 36.34 0.00 ┼ Ma= 36.34 0.00 Ve= 11.18 Vr= 77.98 ✓	36.56 0.00 ┼ Mu= 0.00 36.34 0.00 ┼ Ma= 36.34 0.00 Ve= 11.18 Vr= 77.98 ✓
S117 Lnx= 3.25 Lny= 3.25	35.77 0.00 ┼ Mu= 0.00 35.26 0.00 ┼ Ma= 35.26 0.00 Ve= 10.85 Vr= 77.98 ✓	35.77 0.00 ┼ Mu= 0.00 35.26 0.00 ┼ Ma= 35.26 0.00 Ve= 10.85 Vr= 77.98 ✓	38.68 0.00 ┼ Mu= 0.00 35.94 0.00 ┼ Ma= 35.94 0.00 Ve= 11.06 Vr= 77.98 ✓	38.68 0.00 ┼ Mu= 0.00 35.94 0.00 ┼ Ma= 35.94 0.00 Ve= 11.06 Vr= 77.98 ✓
S118 Lnx= 3.25 Lny= 3.25	35.77 0.00 ┼ Mu= 0.00 35.26 0.00 ┼ Ma= 35.26 0.00 Ve= 10.85 Vr= 77.98 ✓	35.77 0.00 ┼ Mu= 0.00 35.26 0.00 ┼ Ma= 35.26 0.00 Ve= 10.85 Vr= 77.98 ✓	38.68 0.00 ┼ Mu= 0.00 35.94 0.00 ┼ Ma= 35.94 0.00 Ve= 11.06 Vr= 77.98 ✓	38.68 0.00 ┼ Mu= 0.00 35.94 0.00 ┼ Ma= 35.94 0.00 Ve= 11.06 Vr= 77.98 ✓
S119 Lnx= 3.25 Lny= 3.25	38.30 0.00 ┼ Mu= 0.00 38.35 0.00 ┼ Ma= 38.35 0.00 Ve= 11.80 Vr= 77.98 ✓	38.30 0.00 ┼ Mu= 0.00 38.35 0.00 ┼ Ma= 38.35 0.00 Ve= 11.80 Vr= 77.98 ✓	39.56 0.00 ┼ Mu= 0.00 39.75 0.00 ┼ Ma= 39.75 0.00 Ve= 12.23 Vr= 77.98 ✓	39.56 0.00 ┼ Mu= 0.00 39.75 0.00 ┼ Ma= 39.75 0.00 Ve= 12.23 Vr= 77.98 ✓
S120 Lnx= 3.25 Lny= 3.25	39.45 0.00 ┼ Mu= 0.00 39.60 0.00 ┼ Ma= 39.60 0.00 Ve= 12.19 Vr= 77.98 ✓	39.45 0.00 ┼ Mu= 0.00 39.60 0.00 ┼ Ma= 39.60 0.00 Ve= 12.19 Vr= 77.98 ✓	40.49 0.00 ┼ Mu= 0.00 40.73 0.00 ┼ Ma= 40.73 0.00 Ve= 12.53 Vr= 77.98 ✓	40.49 0.00 ┼ Mu= 0.00 40.73 0.00 ┼ Ma= 40.73 0.00 Ve= 12.53 Vr= 77.98 ✓
S121 Lnx= 3.25 Lny= 3.25	39.45 0.00 ┼ Mu= 0.00 39.61 0.00 ┼ Ma= 39.61 0.00 Ve= 12.19 Vr= 77.98 ✓	39.45 0.00 ┼ Mu= 0.00 39.61 0.00 ┼ Ma= 39.61 0.00 Ve= 12.19 Vr= 77.98 ✓	40.49 0.00 ┼ Mu= 0.00 40.73 0.00 ┼ Ma= 40.73 0.00 Ve= 12.53 Vr= 77.98 ✓	40.49 0.00 ┼ Mu= 0.00 40.73 0.00 ┼ Ma= 40.73 0.00 Ve= 12.53 Vr= 77.98 ✓
S122 Lnx= 3.25 Lny= 3.25	38.30 0.00 ┼ Mu= 0.00 38.35 0.00 ┼ Ma= 38.35 0.00 Ve= 11.80 Vr= 77.98 ✓	38.30 0.00 ┼ Mu= 0.00 38.35 0.00 ┼ Ma= 38.35 0.00 Ve= 11.80 Vr= 77.98 ✓	39.56 0.00 ┼ Mu= 0.00 39.75 0.00 ┼ Ma= 39.75 0.00 Ve= 12.23 Vr= 77.98 ✓	39.56 0.00 ┼ Mu= 0.00 39.75 0.00 ┼ Ma= 39.75 0.00 Ve= 12.23 Vr= 77.98 ✓

STAA-CAD V11

FİRMA : | 03-23-2005

PROJE : perdeli sistem (perdeli.ST4)

KOLONLARIN KESME GÜVENLİK KONTROLU

Kolon	+X Mp / Mc / Mr	-X Mp / Mc / Mr	+Y Mp / Mc / Mr	-Y Mp / Mc / Mr
S123 Lnx= 3.25 Lny= 2.35	124.37 0.07 ┼ Mu= 0.04 137.17 0.00 ┼ Ma=137.17 0.00 Ve= 42.22 Vr=190.45 ✓	124.37 -0.06 ┼ Mu= 0.03 137.17 0.00 ┼ Ma=137.17 0.00 Ve= 42.22 Vr=190.45 ✓	177.68 91.57 ┼ Mu= 45.84 178.14 0.00 ┼ Ma=178.14 0.00 Ve= 95.31 Vr=190.45 ✓	177.68 -76.97 ┼ Mu= 38.53 178.14 0.00 ┼ Ma=178.14 0.00 Ve= 92.20 Vr=190.45 ✓
S124 Lnx= 3.25 Lny= 3.25	37.50 0.00 ┼ Mu= 0.00 37.76 0.00 ┼ Ma= 37.76 0.00 Ve= 11.62 Vr= 77.98 ✓	37.50 0.00 ┼ Mu= 0.00 37.76 0.00 ┼ Ma= 37.76 0.00 Ve= 11.62 Vr= 77.98 ✓	40.45 0.00 ┼ Mu= 0.00 40.59 0.00 ┼ Ma= 40.59 0.00 Ve= 12.49 Vr= 77.98 ✓	40.45 0.00 ┼ Mu= 0.00 40.59 0.00 ┼ Ma= 40.59 0.00 Ve= 12.49 Vr= 77.98 ✓
S125 Lnx= 3.25 Lny= 2.25	38.63 0.00 ┼ Mu= 0.00 38.81 0.00 ┼ Ma= 38.81 0.00 Ve= 11.94 Vr= 77.98 ✓	38.62 0.00 ┼ Mu= 0.00 38.81 0.00 ┼ Ma= 38.81 0.00 Ve= 11.94 Vr= 77.98 ✓	39.08 0.00 ┼ Mu= 0.00 39.09 0.00 ┼ Ma= 39.09 0.00 Ve= 12.02 Vr= 77.98 ✓	39.08 0.00 ┼ Mu= 0.00 39.09 0.00 ┼ Ma= 39.09 0.00 Ve= 12.02 Vr= 77.98 ✓
S126 Lnx= 3.25 Lny= 3.25	40.34 0.00 ┼ Mu= 0.00 40.44 0.00 ┼ Ma= 40.44 0.00 Ve= 12.44 Vr= 77.98 ✓	40.34 0.00 ┼ Mu= 0.00 40.44 0.00 ┼ Ma= 40.44 0.00 Ve= 12.44 Vr= 77.98 ✓	38.77 0.00 ┼ Mu= 0.00 38.66 0.00 ┼ Ma= 38.66 0.00 Ve= 11.89 Vr= 77.98 ✓	38.77 0.00 ┼ Mu= 0.00 38.66 0.00 ┼ Ma= 38.66 0.00 Ve= 11.89 Vr= 77.98 ✓
S127 Lnx= 3.25 Lny= 3.25	40.03 0.00 ┼ Mu= 0.00 40.23 0.00 ┼ Ma= 40.23 0.00 Ve= 12.38 Vr= 77.98 ✓	40.03 0.00 ┼ Mu= 0.00 40.23 0.00 ┼ Ma= 40.23 0.00 Ve= 12.38 Vr= 77.98 ✓	38.81 0.00 ┼ Mu= 0.00 38.83 0.00 ┼ Ma= 38.83 0.00 Ve= 11.95 Vr= 77.98 ✓	38.81 0.00 ┼ Mu= 0.00 38.83 0.00 ┼ Ma= 38.83 0.00 Ve= 11.95 Vr= 77.98 ✓
S128 Lnx= 3.25 Lny= 3.25	40.34 0.00 ┼ Mu= 0.00 40.44 0.00 ┼ Ma= 40.44 0.00 Ve= 12.44 Vr= 77.98 ✓	40.34 0.00 ┼ Mu= 0.00 40.44 0.00 ┼ Ma= 40.44 0.00 Ve= 12.44 Vr= 77.98 ✓	38.77 0.00 ┼ Mu= 0.00 38.66 0.00 ┼ Ma= 38.66 0.00 Ve= 11.89 Vr= 77.98 ✓	38.77 0.00 ┼ Mu= 0.00 38.66 0.00 ┼ Ma= 38.66 0.00 Ve= 11.89 Vr= 77.98 ✓
S129 Lnx= 3.25 Lny= 2.25	38.63 0.00 ┼ Mu= 0.00 38.81 0.00 ┼ Ma= 38.81 0.00 Ve= 11.94 Vr= 77.98 ✓	38.62 0.00 ┼ Mu= 0.00 38.81 0.00 ┼ Ma= 38.81 0.00 Ve= 11.94 Vr= 77.98 ✓	39.08 0.00 ┼ Mu= 0.00 39.09 0.00 ┼ Ma= 39.09 0.00 Ve= 12.02 Vr= 77.98 ✓	39.08 0.00 ┼ Mu= 0.00 39.09 0.00 ┼ Ma= 39.09 0.00 Ve= 12.02 Vr= 77.98 ✓
S130 Lnx= 3.25 Lny= 3.25	37.50 0.00 ┼ Mu= 0.00 37.76 0.00 ┼ Ma= 37.76 0.00 Ve= 11.62 Vr= 77.98 ✓	37.50 0.00 ┼ Mu= 0.00 37.76 0.00 ┼ Ma= 37.76 0.00 Ve= 11.62 Vr= 77.98 ✓	40.44 0.00 ┼ Mu= 0.00 40.59 0.00 ┼ Ma= 40.59 0.00 Ve= 12.49 Vr= 77.98 ✓	40.44 0.00 ┼ Mu= 0.00 40.59 0.00 ┼ Ma= 40.59 0.00 Ve= 12.49 Vr= 77.98 ✓
S131 Lnx= 3.25 Lny= 2.35	124.37 0.07 ┼ Mu= 0.04 137.17 0.00 ┼ Ma=137.17 0.00 Ve= 42.22 Vr=190.45 ✓	124.37 -0.06 ┼ Mu= 0.03 137.17 0.00 ┼ Ma=137.17 0.00 Ve= 42.22 Vr=190.45 ✓	177.68 91.57 ┼ Mu= 45.84 178.13 0.00 ┼ Ma=178.13 0.00 Ve= 95.31 Vr=190.45 ✓	177.68 -76.97 ┼ Mu= 38.53 178.13 0.00 ┼ Ma=178.13 0.00 Ve= 92.20 Vr=190.45 ✓
S132 Lnx= 3.25 Lny= 2.35	151.84 0.04 ┼ Mu= 0.02 145.32 0.00 ┼ Ma=145.32 0.00 Ve= 44.72 Vr=190.45 ✓	151.84 -0.03 ┼ Mu= 0.02 145.32 0.00 ┼ Ma=145.32 0.00 Ve= 44.72 Vr=190.45 ✓	177.34 50.95 ┼ Mu= 25.44 176.85 0.00 ┼ Ma=176.85 0.00 Ve= 86.08 Vr=190.45 ✓	177.34 -41.41 ┼ Mu= 20.68 176.85 0.00 ┼ Ma=176.85 0.00 Ve= 84.05 Vr=190.45 ✓
S133 Lnx= 3.25 Lny= 2.35	38.26 0.02 ┼ Mu= 0.02 37.76 0.00 ┼ Ma= 37.76 0.00 Ve= 11.62 Vr= 77.98 ✓	38.26 -0.04 ┼ Mu= 0.02 37.76 0.00 ┼ Ma= 37.76 0.00 Ve= 11.63 Vr= 77.98 ✓	37.38 41.41 ┼ Mu= 20.80 37.75 0.00 ┼ Ma= 37.75 0.00 Ve= 24.82 Vr= 77.98 ✓	37.38 -50.95 ┼ Mu= 25.60 37.75 0.00 ┼ Ma= 37.75 0.00 Ve= 26.96 Vr= 77.98 ✓
S134 Lnx= 3.25 Lny= 3.25	40.84 0.00 ┼ Mu= 0.00 40.88 0.00 ┼ Ma= 40.88 0.00 Ve= 12.58 Vr= 77.98 ✓	40.84 0.00 ┼ Mu= 0.00 40.88 0.00 ┼ Ma= 40.88 0.00 Ve= 12.58 Vr= 77.98 ✓	36.53 0.00 ┼ Mu= 0.00 36.92 0.00 ┼ Ma= 36.92 0.00 Ve= 11.36 Vr= 77.98 ✓	36.53 0.00 ┼ Mu= 0.00 36.92 0.00 ┼ Ma= 36.92 0.00 Ve= 11.36 Vr= 77.98 ✓

STAA-CAD V11

FİRMA : 03-23-2005

PROJE : perdeli sistem (perdeli.ST4)

KOLONLARIN KESME GÜVENLİK KONTROLÜ

Kolon	+X Mp Mc Mr	-X Mp Mc Mr	+Y Mp Mc Mr	-Y Mp Mc Mr
S135	40.84 0.00 ┼ Mu= 0.00 40.88 0.00 ┼ Ma= 40.88 0.00 Ve= 12.58 Vr= 77.98 ✓	40.84 0.00 ┼ Mu= 0.00 40.88 0.00 ┼ Ma= 40.88 0.00 Ve= 12.58 Vr= 77.98 ✓	36.52 0.00 ┼ Mu= 0.00 36.91 0.00 ┼ Ma= 36.91 0.00 Ve= 11.36 Vr= 77.98 ✓	36.52 0.00 ┼ Mu= 0.00 36.91 0.00 ┼ Ma= 36.91 0.00 Ve= 11.36 Vr= 77.98 ✓
Lnx= 3.25 Lny= 3.25				
S136	28.26 0.02 ┼ Mu= 0.02 37.76 0.00 ┼ Ma= 37.76 0.00 Ve= 11.62 Vr= 77.98 ✓	28.26 -0.04 ┼ Mu= 0.02 37.76 0.00 ┼ Ma= 37.76 0.00 Ve= 11.63 Vr= 77.98 ✓	37.28 41.41 ┼ Mu= 20.80 37.75 0.00 ┼ Ma= 37.75 0.00 Ve= 24.91 Vr= 77.98 ✓	37.28 -50.95 ┼ Mu= 25.60 37.75 0.00 ┼ Ma= 37.75 0.00 Ve= 26.95 Vr= 77.98 ✓
Lnx= 3.25 Lny= 2.35				
S137	151.85 0.04 ┼ Mu= 0.02 145.34 0.00 ┼ Ma=145.34 0.00 Ve= 44.72 Vr=190.45 ✓	151.85 -0.03 ┼ Mu= 0.02 145.34 0.00 ┼ Ma=145.34 0.00 Ve= 44.72 Vr=190.45 ✓	177.24 50.95 ┼ Mu= 23.44 176.86 0.00 ┼ Ma=176.86 0.00 Ve= 86.08 Vr=190.45 ✓	177.24 -41.41 ┼ Mu= 20.68 176.86 0.00 ┼ Ma=176.86 0.00 Ve= 84.06 Vr=190.45 ✓
Lnx= 2.35 Lny= 2.35				
S138	169.21 41.45 ┼ Mu= 20.58 166.87 0.00 ┼ Ma=166.87 0.00 Ve= 79.76 Vr=190.45 ✓	169.21 -50.98 ┼ Mu= 25.31 166.87 0.00 ┼ Ma=166.87 0.00 Ve= 81.78 Vr=190.45 ✓	157.95 50.95 ┼ Mu= 25.23 154.97 0.00 ┼ Ma=154.97 0.00 Ve= 76.68 Vr=190.45 ✓	157.95 -41.41 ┼ Mu= 20.51 154.97 0.00 ┼ Ma=154.97 0.00 Ve= 74.67 Vr=190.45 ✓
Lnx= 2.35 Lny= 2.35				
S139	39.94 50.95 ┼ Mu= 25.59 40.30 0.00 ┼ Ma= 40.30 0.00 Ve= 28.04 Vr= 77.98 ✓	39.94 -41.41 ┼ Mu= 20.80 40.30 0.00 ┼ Ma= 40.30 0.00 Ve= 26.00 Vr= 77.98 ✓	29.17 0.00 ┼ Mu= 0.00 28.56 0.00 ┼ Ma= 28.56 0.00 Ve= 8.79 Vr= 77.98 ✓	29.17 0.00 ┼ Mu= 0.00 28.56 0.00 ┼ Ma= 28.56 0.00 Ve= 8.79 Vr= 77.98 ✓
Lnx= 2.35 Lny= 2.25				
S140	39.94 41.41 ┼ Mu= 20.80 40.30 0.00 ┼ Ma= 40.30 0.00 Ve= 26.00 Vr= 77.98 ✓	39.94 -50.95 ┼ Mu= 25.59 40.30 0.00 ┼ Ma= 40.30 0.00 Ve= 28.04 Vr= 77.98 ✓	29.17 0.00 ┼ Mu= 0.00 28.55 0.00 ┼ Ma= 28.55 0.00 Ve= 8.79 Vr= 77.98 ✓	29.17 0.00 ┼ Mu= 0.00 28.55 0.00 ┼ Ma= 28.55 0.00 Ve= 8.79 Vr= 77.98 ✓
Lnx= 2.35 Lny= 2.25				
S141	169.23 50.99 ┼ Mu= 25.32 166.88 0.00 ┼ Ma=166.88 0.00 Ve= 81.79 Vr=190.45 ✓	169.23 -41.44 ┼ Mu= 20.58 166.88 0.00 ┼ Ma=166.88 0.00 Ve= 79.77 Vr=190.45 ✓	157.96 50.95 ┼ Mu= 25.23 154.98 0.00 ┼ Ma=154.98 0.00 Ve= 76.69 Vr=190.45 ✓	157.96 -41.41 ┼ Mu= 20.51 154.98 0.00 ┼ Ma=154.98 0.00 Ve= 74.68 Vr=190.45 ✓
Lnx= 2.35 Lny= 2.35				
S142	178.08 26.81 ┼ Mu= 13.40 178.11 0.00 ┼ Ma=178.11 0.00 Ve= 81.49 Vr=190.45 ✓	178.08 -50.95 ┼ Mu= 25.48 178.11 0.00 ┼ Ma=178.11 0.00 Ve= 86.63 Vr=190.45 ✓	120.78 0.00 ┼ Mu= 0.00 116.26 0.00 ┼ Ma=116.26 0.00 Ve= 35.77 Vr=190.45 ✓	120.78 0.00 ┼ Mu= 0.00 116.26 0.00 ┼ Ma=116.26 0.00 Ve= 35.77 Vr=190.45 ✓
Lnx= 2.35 Lny= 2.25				
S143	178.18 87.52 ┼ Mu= 43.75 178.02 0.00 ┼ Ma=178.02 0.00 Ve= 94.37 Vr=190.45 ✓	178.18 -87.52 ┼ Mu= 43.75 178.02 0.00 ┼ Ma=178.02 0.00 Ve= 94.37 Vr=190.45 ✓	140.91 0.00 ┼ Mu= 0.00 132.31 0.00 ┼ Ma=132.31 0.00 Ve= 40.71 Vr=190.45 ✓	140.91 0.00 ┼ Mu= 0.00 132.31 0.00 ┼ Ma=132.31 0.00 Ve= 40.71 Vr=190.45 ✓
Lnx= 2.35 Lny= 2.25				
S144	178.08 50.95 ┼ Mu= 25.48 178.11 0.00 ┼ Ma=178.11 0.00 Ve= 86.63 Vr=190.45 ✓	178.08 -26.81 ┼ Mu= 13.40 178.11 0.00 ┼ Ma=178.11 0.00 Ve= 81.49 Vr=190.45 ✓	120.78 0.00 ┼ Mu= 0.00 116.24 0.00 ┼ Ma=116.24 0.00 Ve= 35.77 Vr=190.45 ✓	120.78 0.00 ┼ Mu= 0.00 116.24 0.00 ┼ Ma=116.24 0.00 Ve= 35.77 Vr=190.45 ✓
Lnx= 2.35 Lny= 2.25				
S201	168.28 36.81 ┼ Mu= 18.45 169.12 36.81 ┼ Ma= 18.34 170.38 Ve= 15.02 Vr=190.45 ✓	168.28 -45.25 ┼ Mu= 22.68 169.12 -45.25 ┼ Ma= 22.54 170.38 Ve= 18.46 Vr=190.45 ✓	125.85 0.00 ┼ Mu= 0.00 121.99 0.00 ┼ Ma= 0.00 117.94 Ve= 0.00 Vr=190.45 ✓	125.85 0.00 ┼ Mu= 0.00 121.99 0.00 ┼ Ma= 0.00 117.94 Ve= 0.00 Vr=190.45 ✓
Lnx= 2.45 Lny= 2.25				
S202	174.74 76.98 ┼ Mu= 38.57 175.44 76.98 ┼ Ma= 38.40 176.23 Ve= 31.42 Vr=190.45 ✓	174.74 -76.98 ┼ Mu= 38.57 175.44 -76.98 ┼ Ma= 38.40 176.23 Ve= 31.42 Vr=190.45 ✓	126.18 0.00 ┼ Mu= 0.00 122.53 0.00 ┼ Ma= 0.00 118.39 Ve= 0.00 Vr=190.45 ✓	126.18 0.00 ┼ Mu= 0.00 122.53 0.00 ┼ Ma= 0.00 118.39 Ve= 0.00 Vr=190.45 ✓
Lnx= 2.45 Lny= 2.25				

STAA-CAD V11

FİRMA : | 03-23-2005

PROJE : perdeli sistem (perdeli.ST4)

KOLONLARIN KESME GUVENLİK KONTROLU

Kolon	+X Mp Mc Mr	-X Mp Mc Mr	+Y Mp Mc Mr	-Y Mp Mc Mr
S203 Lnx= 2.45 Lny= 3.25	168.28 45.25 ┼ Mu= 22.68 169.12 45.25 ┼ Ma= 22.54 170.38 Ve= 18.46 Vr=190.45 ✓	168.28 -36.81 ┼ Mu= 18.45 169.12 -36.81 ┼ Ma= 18.34 170.38 Ve= 15.02 Vr=190.45 ✓	125.84 0.00 ┼ Mu= 0.00 121.98 0.00 ┼ Ma= 0.00 117.93 Ve= 0.00 Vr=190.45 ✓	125.84 0.00 ┼ Mu= 0.00 121.98 0.00 ┼ Ma= 0.00 117.93 Ve= 0.00 Vr=190.45 ✓
S204 Lnx= 2.35 Lny= 2.35	167.43 41.44 ┼ Mu= 20.54 164.54 41.44 ┼ Ma= 20.92 161.43 Ve= 17.64 Vr=190.45 ✓	167.43 -50.99 ┼ Mu= 25.27 164.54 -50.99 ┼ Ma= 25.74 161.43 Ve= 21.71 Vr=190.45 ✓	161.72 41.41 ┼ Mu= 20.48 158.24 41.41 ┼ Ma= 20.94 154.61 Ve= 17.63 Vr=190.45 ✓	161.72 -50.95 ┼ Mu= 25.20 158.24 -50.95 ┼ Ma= 25.77 154.61 Ve= 21.69 Vr=190.45 ✓
S205 Lnx= 2.35 Lny= 2.35	167.43 50.98 ┼ Mu= 25.27 164.54 50.98 ┼ Ma= 25.73 161.43 Ve= 21.70 Vr=190.45 ✓	167.43 -41.45 ┼ Mu= 20.54 164.54 -41.45 ┼ Ma= 20.92 161.43 Ve= 17.64 Vr=190.45 ✓	161.71 41.41 ┼ Mu= 20.48 158.23 41.41 ┼ Ma= 20.94 154.61 Ve= 17.63 Vr=190.45 ✓	161.71 -50.95 ┼ Mu= 25.20 158.23 -50.95 ┼ Ma= 25.77 154.61 Ve= 21.69 Vr=190.45 ✓
S206 Lnx= 3.25 Lny= 3.25	38.11 0.00 ┼ Mu= 0.00 38.25 0.00 ┼ Ma= 0.00 38.39 Ve= 0.00 Vr= 77.98 ✓	38.11 0.00 ┼ Mu= 0.00 38.25 0.00 ┼ Ma= 0.00 38.39 Ve= 0.00 Vr= 77.98 ✓	34.70 0.00 ┼ Mu= 0.00 35.07 0.00 ┼ Ma= 0.00 35.51 Ve= 0.00 Vr= 77.98 ✓	34.70 0.00 ┼ Mu= 0.00 35.07 0.00 ┼ Ma= 0.00 35.51 Ve= 0.00 Vr= 77.98 ✓
S207 Lnx= 3.25 Lny= 3.25	39.72 0.00 ┼ Mu= 0.00 39.88 0.00 ┼ Ma= 0.00 40.07 Ve= 0.00 Vr= 77.98 ✓	39.72 0.00 ┼ Mu= 0.00 39.88 0.00 ┼ Ma= 0.00 40.07 Ve= 0.00 Vr= 77.98 ✓	39.60 0.00 ┼ Mu= 0.00 39.39 0.00 ┼ Ma= 0.00 39.28 Ve= 0.00 Vr= 77.98 ✓	39.60 0.00 ┼ Mu= 0.00 39.39 0.00 ┼ Ma= 0.00 39.28 Ve= 0.00 Vr= 77.98 ✓
S208 Lnx= 3.25 Lny= 3.25	38.11 0.00 ┼ Mu= 0.00 38.25 0.00 ┼ Ma= 0.00 38.39 Ve= 0.00 Vr= 77.98 ✓	38.11 0.00 ┼ Mu= 0.00 38.25 0.00 ┼ Ma= 0.00 38.39 Ve= 0.00 Vr= 77.98 ✓	34.69 0.00 ┼ Mu= 0.00 35.07 0.00 ┼ Ma= 0.00 35.51 Ve= 0.00 Vr= 77.98 ✓	34.69 0.00 ┼ Mu= 0.00 35.07 0.00 ┼ Ma= 0.00 35.51 Ve= 0.00 Vr= 77.98 ✓
S209 Lnx= 3.25 Lny= 2.35	138.53 0.02 ┼ Mu= 0.01 137.48 0.02 ┼ Ma= 0.01 136.35 Ve= 0.01 Vr=190.45 ✓	138.53 -0.04 ┼ Mu= 0.02 137.48 -0.04 ┼ Ma= 0.02 136.35 Ve= 0.01 Vr=190.45 ✓	178.06 26.81 ┼ Mu= 13.40 177.96 26.81 ┼ Ma= 13.42 177.29 Ve= 11.42 Vr=190.45 ✓	178.06 -50.95 ┼ Mu= 25.47 177.96 -50.16 ┼ Ma= 25.13 177.29 Ve= 21.53 Vr=190.45 ✓
S210 Lnx= 3.25 Lny= 2.35	34.87 0.04 ┼ Mu= 0.02 35.17 0.04 ┼ Ma= 0.02 37.73 Ve= 0.01 Vr= 77.98 ✓	34.87 -0.02 ┼ Mu= 0.02 35.17 -0.02 ┼ Ma= 0.02 37.73 Ve= 0.01 Vr= 77.98 ✓	37.53 50.95 ┼ Mu= 25.59 37.87 50.95 ┼ Ma= 25.29 38.43 Ve= 21.65 Vr= 77.98 ✓	37.53 -41.41 ┼ Mu= 20.80 37.87 -41.41 ┼ Ma= 20.55 38.43 Ve= 17.60 Vr= 77.98 ✓
S211 Lnx= 3.25 Lny= 3.25	38.22 0.00 ┼ Mu= 0.00 38.41 0.00 ┼ Ma= 0.00 38.72 Ve= 0.00 Vr= 77.98 ✓	38.22 0.00 ┼ Mu= 0.00 38.41 0.00 ┼ Ma= 0.00 38.72 Ve= 0.00 Vr= 77.98 ✓	36.25 0.00 ┼ Mu= 0.00 36.45 0.00 ┼ Ma= 0.00 36.87 Ve= 0.00 Vr= 77.98 ✓	36.25 0.00 ┼ Mu= 0.00 36.45 0.00 ┼ Ma= 0.00 36.87 Ve= 0.00 Vr= 77.98 ✓
S212 Lnx= 3.25 Lny= 3.25	38.22 0.00 ┼ Mu= 0.00 38.41 0.00 ┼ Ma= 0.00 38.72 Ve= 0.00 Vr= 77.98 ✓	38.22 0.00 ┼ Mu= 0.00 38.41 0.00 ┼ Ma= 0.00 38.72 Ve= 0.00 Vr= 77.98 ✓	36.25 0.00 ┼ Mu= 0.00 36.45 0.00 ┼ Ma= 0.00 36.87 Ve= 0.00 Vr= 77.98 ✓	36.25 0.00 ┼ Mu= 0.00 36.45 0.00 ┼ Ma= 0.00 36.87 Ve= 0.00 Vr= 77.98 ✓
S213 Lnx= 3.25 Lny= 2.35	34.87 0.04 ┼ Mu= 0.02 35.17 0.04 ┼ Ma= 0.02 37.73 Ve= 0.01 Vr= 77.98 ✓	34.87 -0.02 ┼ Mu= 0.02 35.17 -0.02 ┼ Ma= 0.02 37.73 Ve= 0.01 Vr= 77.98 ✓	37.53 50.95 ┼ Mu= 25.59 37.87 50.95 ┼ Ma= 25.29 38.43 Ve= 21.65 Vr= 77.98 ✓	37.53 -41.41 ┼ Mu= 20.80 37.87 -41.41 ┼ Ma= 20.55 38.43 Ve= 17.60 Vr= 77.98 ✓
S214 Lnx= 3.25 Lny= 2.35	138.53 0.02 ┼ Mu= 0.01 137.48 0.02 ┼ Ma= 0.01 136.35 Ve= 0.01 Vr=190.45 ✓	138.53 -0.04 ┼ Mu= 0.02 137.48 -0.04 ┼ Ma= 0.02 136.35 Ve= 0.01 Vr=190.45 ✓	178.06 26.81 ┼ Mu= 13.40 177.96 26.81 ┼ Ma= 13.43 177.30 Ve= 11.42 Vr=190.45 ✓	178.06 -50.95 ┼ Mu= 25.47 177.96 -50.16 ┼ Ma= 25.13 177.30 Ve= 21.53 Vr=190.45 ✓

STAA-CAD V11

FİRMA : 03-23-2005

PROJE : perdeli sistem (perdeli.ST4)

KOLONLARIN KESME GUVENLİK KONTROLU

Kolon	+X Mp Mc Mr	-X Mp Mc Mr	+Y Mp Mc Mr	-Y Mp Mc Mr
S215	25.57 0.00 + Mu= 0.00 25.39 0.00 + Ma= 0.00 25.21 Ve= 0.00 Vr= 77.98 ✓	25.57 0.00 + Mu= 0.00 25.39 0.00 + Ma= 0.00 25.21 Ve= 0.00 Vr= 77.98 ✓	26.51 0.00 + Mu= 0.00 26.56 0.00 + Ma= 0.00 26.34 Ve= 0.00 Vr= 77.98 ✓	26.51 0.00 + Mu= 0.00 26.56 0.00 + Ma= 0.00 26.34 Ve= 0.00 Vr= 77.98 ✓
Lnx= 3.25 Lny= 3.25				
S216	25.57 0.00 + Mu= 0.00 25.40 0.00 + Ma= 0.00 25.21 Ve= 0.00 Vr= 77.98 ✓	25.57 0.00 + Mu= 0.00 25.40 0.00 + Ma= 0.00 25.21 Ve= 0.00 Vr= 77.98 ✓	26.51 0.00 + Mu= 0.00 26.56 0.00 + Ma= 0.00 26.34 Ve= 0.00 Vr= 77.98 ✓	26.51 0.00 + Mu= 0.00 26.56 0.00 + Ma= 0.00 26.34 Ve= 0.00 Vr= 77.98 ✓
Lnx= 3.25 Lny= 3.25				
S217	25.84 0.00 + Mu= 0.00 25.77 0.00 + Ma= 0.00 25.26 Ve= 0.00 Vr= 77.98 ✓	25.84 0.00 + Mu= 0.00 25.77 0.00 + Ma= 0.00 25.26 Ve= 0.00 Vr= 77.98 ✓	28.25 0.00 + Mu= 0.00 28.68 0.00 + Ma= 0.00 25.94 Ve= 0.00 Vr= 77.98 ✓	28.25 0.00 + Mu= 0.00 28.68 0.00 + Ma= 0.00 25.94 Ve= 0.00 Vr= 77.98 ✓
Lnx= 3.25 Lny= 3.25				
S218	25.85 0.00 + Mu= 0.00 25.77 0.00 + Ma= 0.00 25.26 Ve= 0.00 Vr= 77.98 ✓	25.85 0.00 + Mu= 0.00 25.77 0.00 + Ma= 0.00 25.26 Ve= 0.00 Vr= 77.98 ✓	28.25 0.00 + Mu= 0.00 28.68 0.00 + Ma= 0.00 25.94 Ve= 0.00 Vr= 77.98 ✓	28.25 0.00 + Mu= 0.00 28.68 0.00 + Ma= 0.00 25.94 Ve= 0.00 Vr= 77.98 ✓
Lnx= 3.25 Lny= 3.25				
S219	28.22 0.00 + Mu= 0.00 28.30 0.00 + Ma= 0.00 28.35 Ve= 0.00 Vr= 77.98 ✓	28.22 0.00 + Mu= 0.00 28.30 0.00 + Ma= 0.00 28.35 Ve= 0.00 Vr= 77.98 ✓	29.28 0.00 + Mu= 0.00 29.56 0.00 + Ma= 0.00 29.75 Ve= 0.00 Vr= 77.98 ✓	29.28 0.00 + Mu= 0.00 29.56 0.00 + Ma= 0.00 29.75 Ve= 0.00 Vr= 77.98 ✓
Lnx= 3.25 Lny= 3.25				
S220	29.31 0.00 + Mu= 0.00 29.45 0.00 + Ma= 0.00 29.60 Ve= 0.00 Vr= 77.98 ✓	29.31 0.00 + Mu= 0.00 29.45 0.00 + Ma= 0.00 29.60 Ve= 0.00 Vr= 77.98 ✓	40.29 0.00 + Mu= 0.00 40.49 0.00 + Ma= 0.00 40.73 Ve= 0.00 Vr= 77.98 ✓	40.29 0.00 + Mu= 0.00 40.49 0.00 + Ma= 0.00 40.73 Ve= 0.00 Vr= 77.98 ✓
Lnx= 3.25 Lny= 3.25				
S221	29.31 0.00 + Mu= 0.00 29.45 0.00 + Ma= 0.00 29.61 Ve= 0.00 Vr= 77.98 ✓	29.31 0.00 + Mu= 0.00 29.45 0.00 + Ma= 0.00 29.61 Ve= 0.00 Vr= 77.98 ✓	40.29 0.00 + Mu= 0.00 40.49 0.00 + Ma= 0.00 40.73 Ve= 0.00 Vr= 77.98 ✓	40.29 0.00 + Mu= 0.00 40.49 0.00 + Ma= 0.00 40.73 Ve= 0.00 Vr= 77.98 ✓
Lnx= 3.25 Lny= 3.25				
S222	28.22 0.00 + Mu= 0.00 28.30 0.00 + Ma= 0.00 28.35 Ve= 0.00 Vr= 77.98 ✓	28.22 0.00 + Mu= 0.00 28.30 0.00 + Ma= 0.00 28.35 Ve= 0.00 Vr= 77.98 ✓	29.28 0.00 + Mu= 0.00 29.56 0.00 + Ma= 0.00 29.75 Ve= 0.00 Vr= 77.98 ✓	29.28 0.00 + Mu= 0.00 29.56 0.00 + Ma= 0.00 29.75 Ve= 0.00 Vr= 77.98 ✓
Lnx= 3.25 Lny= 3.25				
S223	134.42 0.07 + Mu= 0.04 134.37 0.07 + Ma= 0.04 137.17 Ve= 0.02 Vr=190.45 ✓	134.42 -0.06 + Mu= 0.03 134.37 -0.06 + Ma= 0.03 137.17 Ve= 0.02 Vr=190.45 ✓	177.16 92.36 + Mu= 46.25 177.68 91.57 + Ma= 45.72 178.14 Ve= 39.14 Vr=190.45 ✓	177.16 -77.76 + Mu= 38.94 177.68 -76.97 + Ma= 38.43 178.14 Ve= 32.92 Vr=190.45 ✓
Lnx= 3.25 Lny= 2.35				
S224	27.36 0.00 + Mu= 0.00 27.50 0.00 + Ma= 0.00 27.76 Ve= 0.00 Vr= 77.98 ✓	27.36 0.00 + Mu= 0.00 27.50 0.00 + Ma= 0.00 27.76 Ve= 0.00 Vr= 77.98 ✓	40.36 0.00 + Mu= 0.00 40.45 0.00 + Ma= 0.00 40.59 Ve= 0.00 Vr= 77.98 ✓	40.36 0.00 + Mu= 0.00 40.45 0.00 + Ma= 0.00 40.59 Ve= 0.00 Vr= 77.98 ✓
Lnx= 3.25 Lny= 3.25				
S225	28.47 0.00 + Mu= 0.00 28.63 0.00 + Ma= 0.00 28.81 Ve= 0.00 Vr= 77.98 ✓	28.47 0.00 + Mu= 0.00 28.63 0.00 + Ma= 0.00 28.81 Ve= 0.00 Vr= 77.98 ✓	28.98 0.00 + Mu= 0.00 29.08 0.00 + Ma= 0.00 29.09 Ve= 0.00 Vr= 77.98 ✓	28.98 0.00 + Mu= 0.00 29.08 0.00 + Ma= 0.00 29.09 Ve= 0.00 Vr= 77.98 ✓
Lnx= 3.25 Lny= 3.25				
S226	29.47 0.00 + Mu= 0.00 40.34 0.00 + Ma= 0.00 40.44 Ve= 0.00 Vr= 77.98 ✓	29.47 0.00 + Mu= 0.00 40.34 0.00 + Ma= 0.00 40.44 Ve= 0.00 Vr= 77.98 ✓	38.78 0.00 + Mu= 0.00 38.77 0.00 + Ma= 0.00 38.66 Ve= 0.00 Vr= 77.98 ✓	38.78 0.00 + Mu= 0.00 38.77 0.00 + Ma= 0.00 38.66 Ve= 0.00 Vr= 77.98 ✓
Lnx= 3.25 Lny= 3.25				

STAA-CAD V11

FİRMA : 03-23-2005

PROJE : perdeli sistem (perdeli.ST4)

KOLONLARIN KESME GÜVENLİK KONTROLÜ

Kolon	+X Mp / Mc / Mr	-X Mp / Mc / Mr	+Y Mp / Mc / Mr	-Y Mp / Mc / Mr
S227	39.87 0.00 + Mu= 0.00 40.03 0.00 + Ma= 0.00 40.23 Ve= 0.00 Vr= 77.98 ✓	39.87 0.00 + Mu= 0.00 40.03 0.00 + Ma= 0.00 40.23 Ve= 0.00 Vr= 77.98 ✓	38.80 0.00 + Mu= 0.00 38.81 0.00 + Ma= 0.00 38.83 Ve= 0.00 Vr= 77.98 ✓	38.80 0.00 + Mu= 0.00 38.81 0.00 + Ma= 0.00 38.83 Ve= 0.00 Vr= 77.98 ✓
Lnx= 3.25 Lny= 3.25				
S228	39.47 0.00 + Mu= 0.00 40.24 0.00 + Ma= 0.00 40.44 Ve= 0.00 Vr= 77.98 ✓	39.47 0.00 + Mu= 0.00 40.34 0.00 + Ma= 0.00 40.44 Ve= 0.00 Vr= 77.98 ✓	38.78 0.00 + Mu= 0.00 38.77 0.00 + Ma= 0.00 38.66 Ve= 0.00 Vr= 77.98 ✓	38.78 0.00 + Mu= 0.00 38.77 0.00 + Ma= 0.00 38.66 Ve= 0.00 Vr= 77.98 ✓
Lnx= 3.25 Lny= 3.25				
S229	38.47 0.00 + Mu= 0.00 38.63 0.00 + Ma= 0.00 38.81 Ve= 0.00 Vr= 77.98 ✓	38.47 0.00 + Mu= 0.00 38.63 0.00 + Ma= 0.00 38.81 Ve= 0.00 Vr= 77.98 ✓	38.98 0.00 + Mu= 0.00 39.08 0.00 + Ma= 0.00 39.09 Ve= 0.00 Vr= 77.98 ✓	38.98 0.00 + Mu= 0.00 39.08 0.00 + Ma= 0.00 39.09 Ve= 0.00 Vr= 77.98 ✓
Lnx= 3.25 Lny= 3.25				
S230	37.36 0.00 + Mu= 0.00 37.50 0.00 + Ma= 0.00 37.76 Ve= 0.00 Vr= 77.98 ✓	37.36 0.00 + Mu= 0.00 37.50 0.00 + Ma= 0.00 37.76 Ve= 0.00 Vr= 77.98 ✓	40.36 0.00 + Mu= 0.00 40.44 0.00 + Ma= 0.00 40.59 Ve= 0.00 Vr= 77.98 ✓	40.36 0.00 + Mu= 0.00 40.44 0.00 + Ma= 0.00 40.59 Ve= 0.00 Vr= 77.98 ✓
Lnx= 3.25 Lny= 3.25				
S231	134.41 0.07 + Mu= 0.04 134.37 0.07 + Ma= 0.04 137.17 Ve= 0.02 Vr=190.45 ✓	134.41 -0.06 + Mu= 0.03 134.37 -0.06 + Ma= 0.03 137.17 Ve= 0.02 Vr=190.45 ✓	177.15 92.36 + Mu= 46.25 177.68 91.57 + Ma= 45.72 178.13 Ve= 39.14 Vr=190.45 ✓	177.15 -77.76 + Mu= 38.94 177.68 -76.97 + Ma= 38.42 178.13 Ve= 32.92 Vr=190.45 ✓
Lnx= 3.25 Lny= 2.35				
S232	157.47 0.04 + Mu= 0.02 151.84 0.04 + Ma= 0.02 145.32 Ve= 0.01 Vr=190.45 ✓	157.47 -0.03 + Mu= 0.02 151.84 -0.03 + Ma= 0.02 145.32 Ve= 0.01 Vr=190.45 ✓	177.88 50.95 + Mu= 25.44 177.34 50.95 + Ma= 25.51 176.85 Ve= 21.68 Vr=190.45 ✓	177.88 -41.41 + Mu= 20.67 177.34 -41.41 + Ma= 20.72 176.85 Ve= 17.62 Vr=190.45 ✓
Lnx= 3.25 Lny= 2.35				
S233	38.77 0.03 + Mu= 0.02 38.26 0.03 + Ma= 0.02 37.76 Ve= 0.01 Vr= 77.98 ✓	38.77 -0.04 + Mu= 0.02 38.26 -0.04 + Ma= 0.02 37.76 Ve= 0.01 Vr= 77.98 ✓	37.10 41.41 + Mu= 20.78 37.38 41.41 + Ma= 20.60 37.75 Ve= 17.61 Vr= 77.98 ✓	37.10 -50.95 + Mu= 25.57 37.38 -50.95 + Ma= 25.35 37.75 Ve= 21.67 Vr= 77.98 ✓
Lnx= 3.25 Lny= 2.35				
S234	40.81 0.00 + Mu= 0.00 40.84 0.00 + Ma= 0.00 40.88 Ve= 0.00 Vr= 77.98 ✓	40.81 0.00 + Mu= 0.00 40.84 0.00 + Ma= 0.00 40.88 Ve= 0.00 Vr= 77.98 ✓	36.36 0.00 + Mu= 0.00 36.53 0.00 + Ma= 0.00 36.92 Ve= 0.00 Vr= 77.98 ✓	36.36 0.00 + Mu= 0.00 36.53 0.00 + Ma= 0.00 36.92 Ve= 0.00 Vr= 77.98 ✓
Lnx= 3.25 Lny= 3.25				
S235	40.81 0.00 + Mu= 0.00 40.84 0.00 + Ma= 0.00 40.88 Ve= 0.00 Vr= 77.98 ✓	40.81 0.00 + Mu= 0.00 40.84 0.00 + Ma= 0.00 40.88 Ve= 0.00 Vr= 77.98 ✓	36.36 0.00 + Mu= 0.00 36.53 0.00 + Ma= 0.00 36.91 Ve= 0.00 Vr= 77.98 ✓	36.36 0.00 + Mu= 0.00 36.53 0.00 + Ma= 0.00 36.91 Ve= 0.00 Vr= 77.98 ✓
Lnx= 3.25 Lny= 3.25				
S236	38.77 0.03 + Mu= 0.02 38.26 0.03 + Ma= 0.02 37.76 Ve= 0.01 Vr= 77.98 ✓	38.77 -0.04 + Mu= 0.02 38.26 -0.04 + Ma= 0.02 37.76 Ve= 0.01 Vr= 77.98 ✓	37.10 41.41 + Mu= 20.78 37.38 41.41 + Ma= 20.60 37.75 Ve= 17.61 Vr= 77.98 ✓	37.10 -50.95 + Mu= 25.57 37.38 -50.95 + Ma= 25.35 37.75 Ve= 21.67 Vr= 77.98 ✓
Lnx= 3.25 Lny= 2.35				
S237	157.48 0.04 + Mu= 0.02 151.85 0.04 + Ma= 0.02 145.34 Ve= 0.01 Vr=190.45 ✓	157.48 -0.03 + Mu= 0.02 151.85 -0.03 + Ma= 0.02 145.34 Ve= 0.01 Vr=190.45 ✓	177.88 50.95 + Mu= 25.44 177.34 50.95 + Ma= 25.51 176.86 Ve= 21.68 Vr=190.45 ✓	177.88 -41.41 + Mu= 20.67 177.34 -41.41 + Ma= 20.72 176.86 Ve= 17.62 Vr=190.45 ✓
Lnx= 3.25 Lny= 2.35				
S238	171.45 41.45 + Mu= 20.59 169.21 41.45 + Ma= 20.87 166.87 Ve= 17.64 Vr=190.45 ✓	171.45 -50.98 + Mu= 25.32 169.21 -50.98 + Ma= 25.67 166.87 Ve= 21.70 Vr=190.45 ✓	160.96 50.95 + Mu= 25.23 157.95 50.95 + Ma= 25.72 154.97 Ve= 21.68 Vr=190.45 ✓	160.96 -41.41 + Mu= 20.51 157.95 -41.41 + Ma= 20.90 154.97 Ve= 17.62 Vr=190.45 ✓
Lnx= 2.35 Lny= 2.35				

STAA-CAD V11

FİRMA : | 03-23-2005

PROJE : perdeli sistem | (perdeli.ST4)

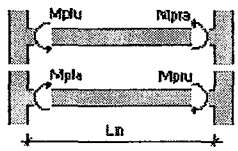

$$V_e = \frac{M_{plu} + M_{pra}}{L_n}$$

$$V_e = \frac{M_{pla} + M_{pru}}{L_n}$$

$V_e < V_r$

$V_e < 0.22\, b_w\, d\, f_{cd}$

KİRİŞLERİN KESME GÜVENLİK KONTROLU (tm)

Kiriş	Ln	Mplu	Mpla	Mpru	Mpra	Vdl +	Vpl =	Vel <	Vrl	Vdr +	Vpr =	Ver <	Vrr	✓,x
K102	3.40	45.25	36.81	40.17	36.81	5.79	33.74	39.53	79.23	4.29	31.65	35.94	79.23	✓
K103	3.40	40.17	36.81	45.25	36.81	4.28	31.65	35.93	79.23	5.80	33.74	39.54	79.23	✓
K105	3.90	50.95	41.41	20.62	41.41	12.23	33.20	45.43	89.66	3.27	22.30	25.56	89.66	✓
K106	3.90	20.62	41.41	50.95	41.41	3.26	22.30	25.56	89.66	12.29	33.20	45.49	89.66	✓
K127	3.90	50.95	41.41	50.95	41.41	6.52	33.20	39.72	89.66	5.73	33.20	38.92	89.66	✓
K128	3.90	50.95	41.41	50.95	41.41	5.73	33.20	38.93	89.66	6.51	33.20	39.71	89.66	✓
K129	6.21	50.95	26.81	60.73	26.81	11.72	17.54	29.27	89.66	12.09	19.75	31.84	89.66	✓
K130	6.21	60.73	26.81	50.95	26.81	12.11	19.75	31.85	89.66	11.71	17.54	29.26	89.66	✓
K131	4.19	50.16	41.41	50.95	41.41	8.06	30.56	38.61	89.66	5.82	30.82	36.64	89.66	✓
K132	8.00	50.16	26.81	50.16	26.81	17.05	13.48	30.53	89.66	17.46	13.48	30.94	89.66	✓
K133	3.90	50.95	41.41	50.95	41.41	5.86	33.15	39.01	89.66	6.42	33.15	39.58	89.66	✓
K134	3.90	50.95	41.41	50.95	41.41	5.88	33.15	39.04	89.66	6.42	33.15	39.57	89.66	✓
K157	3.90	50.95	41.41	50.95	41.41	5.85	33.15	39.01	89.66	6.43	33.15	39.58	89.66	✓
K158	3.90	50.95	41.41	50.95	41.41	5.88	33.15	39.04	89.66	6.42	33.15	39.57	89.66	✓
K159	4.19	50.16	41.41	50.95	41.41	8.06	30.56	38.61	89.66	5.82	30.82	36.64	89.66	✓
K160	8.00	50.16	26.81	50.16	26.81	17.05	13.48	30.53	89.66	17.46	13.48	30.94	89.66	✓
K202	3.40	45.25	36.81	40.17	36.81	5.52	33.74	39.26	79.23	4.56	31.65	36.21	79.23	✓
K203	3.40	40.17	36.81	45.25	36.81	4.56	31.65	36.21	79.23	5.53	33.74	39.26	79.23	✓
K205	3.90	50.95	41.41	20.62	41.41	11.92	33.20	45.12	89.66	3.58	22.30	25.87	89.66	✓
K206	3.90	20.62	41.41	50.95	41.41	3.57	22.30	25.87	89.66	11.93	33.20	45.12	89.66	✓
K227	3.90	50.95	41.41	50.95	41.41	6.06	33.20	39.26	89.66	6.19	33.20	39.38	89.66	✓
K228	3.90	50.95	41.41	50.95	41.41	6.19	33.20	39.29	89.66	6.05	33.20	39.25	89.66	✓
K229	6.21	50.95	26.81	60.73	26.81	12.22	17.54	29.76	89.66	11.60	19.75	31.35	89.66	✓
K230	6.21	60.73	26.81	50.95	26.81	11.61	19.75	31.36	89.66	12.21	17.54	29.75	89.66	✓
K231	4.19	50.95	41.41	50.95	41.41	7.20	30.82	38.02	89.66	6.68	30.82	37.50	89.66	✓
K232	8.00	50.95	26.81	50.95	26.81	17.21	13.62	30.82	89.66	17.30	13.62	30.92	89.66	✓
K233	3.90	50.95	41.41	50.95	41.41	6.38	33.15	39.54	89.66	5.90	33.15	39.05	89.66	✓
K234	3.90	50.95	41.41	50.95	41.41	4.85	33.15	38.00	89.66	7.46	33.15	40.61	89.66	✓
K257	3.90	50.95	41.41	50.95	41.41	6.38	33.15	39.54	89.66	5.90	33.15	39.05	89.66	✓
K258	3.90	50.95	41.41	50.95	41.41	4.84	33.15	38.00	89.66	7.46	33.15	40.61	89.66	✓
K259	4.19	50.95	41.41	50.95	41.41	7.19	30.82	38.02	89.66	6.68	30.82	37.50	89.66	✓
K260	8.00	50.95	26.81	50.95	26.81	17.21	13.62	30.82	89.66	17.30	13.62	30.92	89.66	✓
K302	3.40	45.25	36.81	40.17	36.81	5.55	33.74	39.28	79.23	4.54	31.65	36.19	79.23	✓
K303	3.40	40.17	36.81	45.25	36.81	4.53	31.65	36.18	79.23	5.55	33.74	39.29	79.23	✓
K305	3.90	50.95	41.41	20.62	41.41	11.55	33.20	44.74	89.66	3.95	22.30	26.25	89.66	✓
K306	3.90	20.62	39.80	50.95	39.80	3.94	21.72	25.66	89.66	11.55	32.62	44.17	89.66	✓
K327	3.90	50.95	41.41	50.95	41.41	5.69	33.20	38.89	89.66	6.56	33.20	39.75	89.66	✓
K328	3.90	50.95	41.41	50.95	41.41	6.56	33.20	39.76	89.66	5.68	33.20	38.88	89.66	✓
K329	6.21	50.95	26.81	60.73	26.81	12.39	17.54	29.93	89.66	11.43	19.75	31.18	89.66	✓
K330	6.21	60.73	26.81	50.95	26.81	11.44	19.75	31.19	89.66	12.37	17.54	29.92	89.66	✓
K331	4.19	50.95	41.41	50.95	41.41	6.99	30.82	37.81	89.66	6.88	30.82	37.70	89.66	✓
K332	8.00	50.95	26.81	50.95	26.81	17.19	13.62	30.80	89.66	17.33	13.62	30.94	89.66	✓
K333	3.90	50.95	41.41	50.95	41.41	6.80	33.15	39.95	89.66	5.48	33.15	38.63	89.66	✓
K334	3.90	50.95	41.41	50.95	41.41	3.91	33.15	37.07	89.66	8.39	33.15	41.54	89.66	✓
K357	3.90	50.95	41.41	50.95	41.41	6.80	33.15	39.95	89.66	5.48	33.15	38.64	89.66	✓
K358	3.90	50.95	41.41	50.95	41.41	3.91	33.15	37.07	89.66	8.39	33.15	41.54	89.66	✓
K359	4.19	50.95	41.41	50.95	41.41	6.99	30.82	37.81	89.66	6.88	30.82	37.71	89.66	✓
K360	8.00	50.95	26.81	50.95	26.81	17.19	13.62	30.80	89.66	17.33	13.62	30.94	89.66	✓
K402	3.40	45.25	36.81	40.17	36.81	5.53	33.74	39.27	79.23	4.55	31.65	36.20	79.23	✓
K403	3.40	40.17	36.81	45.25	36.81	4.54	31.65	36.19	79.23	5.54	33.74	39.28	79.23	✓
K405	3.90	50.95	39.80	20.62	39.80	11.24	32.62	43.86	89.66	4.26	21.72	25.98	89.66	✓
K406	3.90	20.62	39.80	50.95	39.80	4.25	21.72	25.97	89.66	11.25	32.62	43.86	89.66	✓
K427	3.90	50.95	41.41	50.95	41.41	5.28	33.20	38.58	89.66	6.87	33.20	40.06	89.66	✓
K428	3.90	50.95	41.41	50.95	41.41	6.87	33.20	40.07	89.66	5.37	33.20	38.57	89.66	✓
K429	6.21	50.95	26.81	60.73	26.81	12.53	17.54	30.07	89.66	11.23	19.75	31.04	89.66	✓
K430	6.21	60.73	26.81	50.95	26.81	11.30	19.75	31.05	89.66	12.52	17.54	30.06	89.66	✓
K431	4.19	50.95	41.41	50.95	41.41	6.80	30.82	37.62	89.66	7.08	30.82	37.90	89.66	✓
K432	8.00	50.95	26.81	50.95	26.81	17.19	13.62	30.80	89.66	17.32	13.62	30.94	89.66	✓
K433	3.90	50.95	41.41	50.95	41.41	7.14	33.15	40.30	89.66	5.14	33.15	38.29	89.66	✓
K434	3.90	50.95	41.41	50.95	41.41	3.10	33.15	36.25	89.66	9.20	33.15	42.36	89.66	✓
K457	3.90	50.95	41.41	50.95	41.41	7.14	33.15	40.29	89.66	5.14	33.15	38.29	89.66	✓
K458	3.90	50.95	41.41	50.95	41.41	3.10	33.15	36.25	89.66	9.21	33.15	42.36	89.66	✓
K459	4.19	50.95	41.41	50.95	41.41	6.79	30.82	37.62	89.66	7.08	30.82	37.90	89.66	✓
K460	8.00	50.95	26.81	50.95	26.81	17.19	13.62	30.80	89.66	17.32	13.62	30.94	89.66	✓
K502	3.40	45.25	36.81	40.17	36.81	5.54	33.74	39.28	79.23	4.54	31.65	36.19	79.23	✓
K503	3.40	40.17	36.81	45.25	36.81	4.53	31.65	36.18	79.23	5.55	33.74	39.29	79.23	✓
K505	3.90	50.95	39.80	20.62	39.80	10.96	32.62	43.58	89.66	4.54	21.72	26.26	89.66	✓
K506	3.90	20.62	39.80	50.95	39.80	4.53	21.72	26.25	89.66	10.97	32.62	43.59	89.66	✓
K527	3.90	50.95	41.41	50.95	41.41	5.11	33.20	38.31	89.66	7.14	33.20	40.33	89.66	✓
K528	3.90	50.95	41.41	50.95	41.41	7.14	33.20	40.34	89.66	5.10	33.20	38.30	89.66	✓
K529	6.21	50.95	26.81	60.73	26.81	12.61	17.54	30.16	89.66	11.20	19.75	30.95	89.66	✓
K530	6.21	60.73	26.81	50.95	26.81	11.22	19.75	30.96	89.66	12.60	17.54	30.15	89.66	✓
K531	4.19	50.95	41.41	50.95	41.41	6.68	30.82	37.51	89.66	7.19	30.82	38.01	89.66	✓
K532	8.00	50.95	26.81	50.95	26.81	17.17	13.62	30.79	89.66	17.34	13.62	30.95	89.66	✓
K533	3.90	50.95	41.41	50.95	41.41	7.44	33.15	40.59	89.66	4.84	33.15	38.00	89.66	✓
K534	3.90	50.95	41.41	50.95	41.41	2.37	33.15	35.53	89.66	9.93	33.15	43.08	89.66	✓
K557	3.90	50.95	41.41	50.95	41.41	7.43	33.15	40.59	89.66	4.85	33.15	38.00	89.66	✓
K558	3.90	50.95	41.41	50.95	41.41	2.37	33.15	35.53	89.66	9.93	33.15	43.08	89.66	✓
K559	4.19	50.95	41.41	50.95	41.41	6.68	30.82	37.50	89.66	7.19	30.82	38.01	89.66	✓

STAA-CAD V11

FİRMA : 03-23-2005

PROJE : perdeli sistem (perdeli.ST4)

KİRİŞLERİN KESME GÜVENLİK KONTROLU (tm)

Kiriş	Ln	Mplu	Mpla	Mpra	Mpra	Vdl +	Vpl =	Vel <	Vrl	Vdr +	Vpr =	Ver <	Vrr	✓,✗
K560	8.00	50.95	26.81	50.95	26.81	17.17	13.62	20.79	89.66	17.34	13.62	20.95	89.66	✓
K602	3.40	45.25	36.81	40.17	36.81	5.55	33.74	39.29	79.23	4.53	31.65	36.18	79.23	✓
K603	3.40	40.17	36.81	45.25	36.81	4.52	31.65	36.17	79.23	5.56	33.74	39.30	79.23	✓
K605	3.90	50.95	39.80	20.62	39.80	10.71	32.62	43.33	89.66	4.79	21.72	26.50	89.66	✓
K606	3.90	20.62	39.80	50.95	39.80	4.78	21.72	26.50	89.66	10.72	32.62	43.34	89.66	✓
K627	3.90	50.95	41.41	50.95	41.41	4.88	33.20	38.07	89.66	7.37	33.20	40.56	89.66	✓
K628	3.90	50.95	41.41	50.95	41.41	7.37	33.20	40.57	89.66	4.87	33.20	38.07	89.66	✓
K629	6.21	50.95	26.81	60.73	26.81	12.67	17.54	30.21	89.66	11.15	19.75	30.90	89.66	✓
K630	6.21	60.73	26.81	50.95	26.81	11.16	19.75	30.91	89.66	12.66	17.54	30.20	89.66	✓
K631	4.19	50.95	41.41	50.95	41.41	6.61	30.82	37.43	89.66	7.26	30.82	38.08	89.66	✓
K632	8.00	50.95	26.81	50.95	26.81	17.16	13.62	30.77	89.66	17.35	13.62	30.97	89.66	✓
K633	3.90	50.95	41.41	50.95	41.41	7.68	33.15	40.84	89.66	4.60	33.15	37.75	89.66	✓
K634	3.90	50.95	41.41	50.95	41.41	1.74	33.15	34.89	89.66	10.57	33.15	43.72	89.66	✓
K657	3.90	50.95	41.41	50.95	41.41	7.68	33.15	40.83	89.66	4.60	33.15	37.75	89.66	✓
K658	3.90	50.95	41.41	50.95	41.41	1.73	33.15	34.89	89.66	10.57	33.15	43.72	89.66	✓
K659	4.19	50.95	41.41	50.95	41.41	6.61	30.82	37.43	89.66	7.26	30.82	38.09	89.66	✓
K660	8.00	50.95	26.81	50.95	26.81	17.16	13.62	30.77	89.66	17.35	13.62	30.97	89.66	✓
K702	3.40	45.25	36.81	40.17	36.81	5.56	33.74	39.30	79.23	4.52	31.65	36.17	79.23	✓
K703	3.40	40.17	36.81	45.25	36.81	4.51	31.65	36.16	79.23	5.57	33.74	39.31	79.23	✓
K705	3.90	50.95	39.80	20.62	39.80	10.50	32.62	43.11	89.66	5.00	21.72	26.72	89.66	✓
K706	3.90	20.62	39.80	50.95	39.80	5.00	21.72	26.72	89.66	10.50	32.62	43.12	89.66	✓
K727	3.90	50.95	41.41	50.95	41.41	4.68	33.20	37.88	89.66	7.57	33.20	40.76	89.66	✓
K728	3.90	50.95	41.41	50.95	41.41	7.57	33.20	40.77	89.66	4.67	33.20	37.87	89.66	✓
K729	6.21	50.95	26.81	60.73	26.81	12.70	17.54	30.25	89.66	11.11	19.75	30.86	89.66	✓
K730	6.21	60.73	26.81	50.95	26.81	11.13	19.75	30.87	89.66	12.69	17.54	30.23	89.66	✓
K731	4.19	50.95	41.41	50.95	41.41	6.56	30.82	37.38	89.66	7.31	30.82	38.13	89.66	✓
K732	8.00	50.95	26.81	50.95	26.81	17.14	13.62	30.76	89.66	17.37	13.62	30.99	89.66	✓
K733	3.90	50.95	41.41	50.95	41.41	7.90	33.15	41.05	89.66	4.38	33.15	37.54	89.66	✓
K734	3.90	50.95	41.41	50.95	41.41	1.17	33.15	34.33	89.66	11.13	33.15	44.28	89.66	✓
K757	3.90	50.95	41.41	50.95	41.41	7.89	33.15	41.05	89.66	4.39	33.15	37.54	89.66	✓
K758	3.90	50.95	41.41	50.95	41.41	1.17	33.15	34.33	89.66	11.13	33.15	44.28	89.66	✓
K759	4.19	50.95	41.41	50.95	41.41	6.56	30.82	37.38	89.66	7.31	30.82	38.13	89.66	✓
K760	8.00	50.95	26.81	50.95	26.81	17.14	13.62	30.76	89.66	17.37	13.62	30.99	89.66	✓
K802	3.40	45.25	36.81	40.17	36.81	5.58	33.74	39.32	79.23	4.50	31.65	36.16	79.23	✓
K803	3.40	40.17	36.81	45.25	36.81	4.50	31.65	36.15	79.23	5.58	33.74	39.32	79.23	✓
K805	3.90	50.95	39.80	20.62	39.80	10.30	32.62	42.92	89.66	5.20	21.72	26.92	89.66	✓
K806	3.90	20.62	39.80	50.95	39.80	5.19	21.72	26.91	89.66	10.31	32.62	42.93	89.66	✓
K827	3.90	50.95	41.41	50.95	41.41	4.51	33.20	37.70	89.66	7.74	33.20	40.93	89.66	✓
K828	3.90	50.95	41.41	50.95	41.41	7.74	33.20	40.94	89.66	4.50	33.20	37.70	89.66	✓
K829	6.21	50.95	26.81	60.73	26.81	12.72	17.54	30.27	89.66	11.09	19.75	30.84	89.66	✓
K830	6.21	60.73	26.81	50.95	26.81	11.10	19.75	30.85	89.66	12.71	17.54	30.26	89.66	✓
K831	4.19	50.95	41.41	50.95	41.41	6.53	30.82	37.35	89.66	7.34	30.82	38.16	89.66	✓
K832	8.00	50.95	26.81	50.95	26.81	17.13	13.62	30.74	89.66	17.39	13.62	31.00	89.66	✓
K833	3.90	50.95	41.41	50.95	41.41	8.08	33.15	41.23	89.66	4.20	33.15	37.36	89.66	✓
K834	3.90	50.95	39.80	50.95	39.80	0.68	32.58	33.26	89.66	11.62	32.58	44.20	89.66	✓
K857	3.90	50.95	41.41	50.95	41.41	8.07	33.15	41.23	89.66	4.21	33.15	37.36	89.66	✓
K858	3.90	50.95	39.80	50.95	39.80	0.68	32.58	33.25	89.66	11.63	32.58	44.20	89.66	✓
K859	4.19	50.95	41.41	50.95	41.41	6.53	30.82	37.35	89.66	7.34	30.82	38.16	89.66	✓
K860	8.00	50.95	26.81	50.95	26.81	17.13	13.62	30.74	89.66	17.39	13.62	31.00	89.66	✓
K902	3.40	45.25	36.81	40.17	36.81	5.59	33.74	39.33	79.23	4.49	31.65	36.14	79.23	✓
K903	3.40	40.17	36.81	45.25	36.81	4.48	31.65	36.13	79.23	5.60	33.74	39.34	79.23	✓
K905	3.90	50.95	39.80	20.62	39.80	10.13	32.62	42.75	89.66	5.37	21.72	27.08	89.66	✓
K906	3.90	20.62	39.80	50.95	39.80	5.36	21.72	27.08	89.66	10.14	32.62	42.76	89.66	✓
K927	3.90	50.95	41.41	50.95	41.41	4.36	33.20	37.56	89.66	7.88	33.20	41.08	89.66	✓
K928	3.90	50.95	41.41	50.95	41.41	7.89	33.20	41.09	89.66	4.36	33.20	37.55	89.66	✓
K929	6.21	50.95	26.81	60.73	26.81	12.74	17.54	30.28	89.66	11.08	19.75	30.83	89.66	✓
K930	6.21	60.73	26.81	50.95	26.81	11.09	19.75	30.84	89.66	12.73	17.54	30.27	89.66	✓
K931	4.19	50.95	41.41	50.95	41.41	6.51	30.82	37.34	89.66	7.36	30.82	38.18	89.66	✓
K932	8.00	50.95	26.81	50.95	26.81	17.11	13.62	30.73	89.66	17.40	13.62	31.02	89.66	✓
K933	3.90	50.95	41.41	50.95	41.41	8.23	33.15	41.38	89.66	4.05	33.15	37.20	89.66	✓
K934	3.90	50.95	39.80	50.95	39.80	0.24	32.58	32.82	89.66	12.06	32.58	44.64	89.66	✓
K957	3.90	50.95	41.41	50.95	41.41	8.23	33.15	41.38	89.66	4.05	33.15	37.21	89.66	✓
K958	3.90	50.95	39.80	50.95	39.80	0.24	32.58	32.82	89.66	12.06	32.58	44.64	89.66	✓
K959	4.19	50.95	41.41	50.95	41.41	6.51	30.82	37.33	89.66	7.36	30.82	38.18	89.66	✓
K960	8.00	50.95	26.81	50.95	26.81	17.11	13.62	30.73	89.66	17.40	13.62	31.02	89.66	✓
K1002	3.40	45.25	36.81	40.17	36.81	5.60	33.74	39.34	79.23	4.48	31.65	36.13	79.23	✓
K1003	3.40	40.17	36.81	45.25	36.81	4.47	31.65	36.12	79.23	5.61	33.74	39.35	79.23	✓
K1005	3.90	50.95	39.80	20.62	39.80	9.98	32.62	42.60	89.66	5.51	21.72	27.23	89.66	✓
K1006	3.90	20.62	39.80	50.95	39.80	5.51	21.72	27.23	89.66	9.99	32.62	42.61	89.66	✓
K1027	3.90	50.95	41.41	50.95	41.41	4.24	33.20	37.43	89.66	8.01	33.20	41.21	89.66	✓
K1028	3.90	50.95	41.41	50.95	41.41	8.01	33.20	41.21	89.66	4.23	33.20	37.43	89.66	✓
K1029	6.21	50.95	26.81	60.73	26.81	12.74	17.54	30.29	89.66	11.07	19.75	30.82	89.66	✓
K1030	6.21	60.73	26.81	50.95	26.81	11.08	19.75	30.83	89.66	12.73	17.54	30.28	89.66	✓
K1031	4.19	50.95	41.41	50.95	41.41	6.50	30.82	37.32	89.66	7.37	30.82	38.19	89.66	✓
K1032	8.00	50.95	26.81	50.95	26.81	17.10	13.62	30.71	89.66	17.41	13.62	31.03	89.66	✓
K1033	3.90	50.95	41.41	50.95	41.41	8.36	33.15	41.51	89.66	3.92	33.15	37.07	89.66	✓
K1034	3.90	50.95	39.80	50.95	39.80	0.14	32.58	32.72	89.66	12.45	32.58	45.02	89.66	✓
K1057	3.90	50.95	41.41	50.95	41.41	8.36	33.15	41.51	89.66	3.92	33.15	37.08	89.66	✓
K1058	3.90	50.95	39.80	50.95	39.80	0.14	32.58	32.72	89.66	12.45	32.58	45.03	89.66	✓
K1059	4.19	50.95	41.41	50.95	41.41	6.50	30.82	37.32	89.66	7.37	30.82	38.20	89.66	✓
K1060	8.00	50.95	26.81	50.95	26.81	17.10	13.62	30.71	89.66	17.41	13.62	31.03	89.66	✓
K1102	3.40	45.25	36.81	40.17	36.81	5.61	33.74	39.35	79.23	4.47	31.65	36.12	79.23	✓
K1103	3.40	40.17	36.81	45.25	36.81	4.46	31.65	36.11	79.23	5.62	33.74	39.36	79.23	✓
K1105	3.90	50.95	39.80	20.62	39.80	9.85	32.62	42.47	89.66	5.65	21.72	27.36	89.66	✓
K1106	3.90	20.62	39.80	50.95	39.80	5.64	21.72	27.36	89.66	9.86	32.62	42.48	89.66	✓
K1127	3.90	50.95	41.41	50.95	41.41	4.13	33.20	37.33	89.66	8.12	33.20	41.31	89.66	✓
K1128	3.90	50.95	41.41	50.95	41.41	8.12	33.20	41.32	89.66	4.12	33.20	37.32	89.66	✓

STAA-CAD V11

FİRMA : 03-23-2005

PROJE : perdeli sistem (perdeli.ST4)

KİRİŞLERİN KESME GÜVENLİK KONTROLU (tm)

Kiriş	Ln	Mpln	Mpla	Mpru	Mpra	Vdl +	Vpl =	Vel <	Vrl	Vdr +	Vpr =	Ver <	Vrr	✓,X
K1129	6.21	50.95	26.81	60.73	26.81	12.75	17.54	30.29	89.66	11.07	19.75	30.82	89.66	✓
K1130	6.21	60.73	26.81	50.95	26.81	11.08	19.75	30.83	89.66	12.74	17.54	30.28	89.66	✓
K1131	4.19	50.95	41.41	50.95	41.41	6.50	30.82	37.32	89.66	7.38	30.82	38.20	89.66	✓
K1132	8.00	50.95	26.81	50.95	26.81	17.09	13.62	30.70	89.66	17.43	13.62	31.04	89.66	✓
K1133	3.90	50.95	41.41	50.95	41.41	8.47	33.15	41.63	89.66	3.81	33.15	36.96	89.66	✓
K1134	3.90	50.95	39.80	50.95	39.80	0.48	32.58	33.06	89.66	12.78	32.58	45.36	89.66	✓
K1157	3.90	50.95	41.41	50.95	41.41	8.47	33.15	41.62	89.66	3.81	33.15	36.96	89.66	✓
K1158	3.90	50.95	39.80	50.95	39.80	0.48	32.58	33.06	89.66	12.79	32.58	45.36	89.66	✓
K1159	4.19	50.95	41.41	50.95	41.41	6.49	30.82	37.31	89.66	7.38	30.82	38.20	89.66	✓
K1160	8.00	50.95	26.81	50.95	26.81	17.06	13.62	30.70	89.66	17.43	13.62	31.04	89.66	✓
K1202	3.40	45.25	36.81	40.17	36.81	5.62	33.74	39.36	79.23	4.46	31.65	36.11	79.23	✓
K1203	3.40	40.17	36.81	45.25	36.81	4.45	31.65	36.10	79.23	5.63	33.74	39.37	79.23	✓
K1205	3.90	50.95	39.80	20.62	39.80	9.74	32.62	42.36	89.66	5.76	21.72	27.48	89.66	✓
K1206	3.90	20.62	39.80	50.95	39.80	5.76	21.72	27.47	89.66	9.74	32.62	42.36	89.66	✓
K1227	3.90	50.95	41.41	50.95	41.41	4.04	33.20	37.23	89.66	8.21	33.20	41.41	89.66	✓
K1228	3.90	50.95	41.41	50.95	41.41	8.21	33.20	41.41	89.66	4.03	33.20	37.23	89.66	✓
K1229	6.21	50.95	26.81	60.73	26.81	12.75	17.54	30.29	89.66	11.07	19.75	30.82	89.66	✓
K1230	6.21	60.73	26.81	50.95	26.81	11.08	19.75	30.83	89.66	12.74	17.54	30.28	89.66	✓
K1231	4.19	50.95	41.41	50.95	41.41	6.49	30.82	37.31	89.66	7.38	30.82	38.20	89.66	✓
K1232	8.00	50.95	26.81	50.95	26.81	17.07	13.62	30.69	89.66	17.44	13.62	31.05	89.66	✓
K1233	3.90	50.95	41.41	50.95	41.41	8.57	33.15	41.72	89.66	3.71	33.15	36.87	89.66	✓
K1234	3.90	50.95	39.80	50.95	39.80	0.76	32.58	33.36	89.66	13.08	32.58	45.66	89.66	✓
K1257	3.90	50.95	41.41	50.95	41.41	8.56	33.15	41.72	89.66	3.72	33.15	36.87	89.66	✓
K1258	3.90	50.95	39.80	50.95	39.80	0.76	32.58	33.36	89.66	13.08	32.58	45.66	89.66	✓
K1259	4.19	50.95	41.41	50.95	41.41	6.49	30.82	37.31	89.66	7.38	30.82	38.20	89.66	✓
K1260	8.00	50.95	26.81	50.95	26.81	17.07	13.62	30.69	89.66	17.44	13.62	31.05	89.66	✓
K1302	3.40	45.25	36.81	40.17	36.81	5.63	33.74	39.37	79.23	4.45	31.65	36.10	79.23	✓
K1303	3.40	40.17	36.81	45.25	36.81	4.44	31.65	36.09	79.23	5.64	33.74	39.38	79.23	✓
K1305	3.90	50.95	39.80	20.62	39.80	9.64	32.62	42.26	89.66	5.86	21.72	27.58	89.66	✓
K1306	3.90	20.62	39.80	50.95	39.80	5.86	21.72	27.58	89.66	9.64	32.62	42.26	89.66	✓
K1327	3.90	50.95	41.41	50.95	41.41	3.96	33.20	37.16	89.66	8.29	33.20	41.48	89.66	✓
K1328	3.90	50.95	41.41	50.95	41.41	8.29	33.20	41.49	89.66	3.95	33.20	37.15	89.66	✓
K1329	6.21	50.95	26.81	60.73	26.81	12.75	17.54	30.29	89.66	11.07	19.75	30.82	89.66	✓
K1330	6.21	60.73	26.81	50.95	26.81	11.08	19.75	30.83	89.66	12.74	17.54	30.28	89.66	✓
K1331	4.19	50.95	41.41	50.95	41.41	6.49	30.82	37.31	89.66	7.38	30.82	38.20	89.66	✓
K1332	8.00	50.95	26.81	50.95	26.81	17.06	13.62	30.68	89.66	17.45	13.62	31.06	89.66	✓
K1333	3.90	50.95	41.41	50.95	41.41	8.65	33.15	41.80	89.66	3.63	33.15	36.78	89.66	✓
K1334	3.90	50.95	39.80	50.95	39.80	1.04	32.58	33.62	89.66	13.34	32.58	45.92	89.66	✓
K1357	3.90	50.95	41.41	50.95	41.41	8.65	33.15	41.80	89.66	3.63	33.15	36.79	89.66	✓
K1358	3.90	50.95	39.80	50.95	39.80	1.04	32.58	33.62	89.66	13.35	32.58	45.92	89.66	✓
K1359	4.19	50.95	41.41	50.95	41.41	6.49	30.82	37.31	89.66	7.38	30.82	38.21	89.66	✓
K1360	8.00	50.95	26.81	50.95	26.81	17.06	13.62	30.68	89.66	17.45	13.62	31.06	89.66	✓
K1402	3.40	45.25	36.81	40.17	36.81	5.64	33.74	39.38	79.23	4.44	31.65	36.09	79.23	✓
K1403	3.40	40.17	36.81	45.25	36.81	4.43	31.65	36.08	79.23	5.65	33.74	39.39	79.23	✓
K1405	3.90	50.95	39.80	20.62	39.80	9.55	32.62	42.17	89.66	5.95	21.72	27.67	89.66	✓
K1406	3.90	20.62	39.80	50.95	39.80	5.95	21.72	27.67	89.66	9.55	32.62	42.17	89.66	✓
K1427	3.90	50.95	41.41	50.95	41.41	3.89	33.20	37.09	89.66	8.36	33.20	41.55	89.66	✓
K1428	3.90	50.95	41.41	50.95	41.41	8.36	33.20	41.56	89.66	3.89	33.20	37.08	89.66	✓
K1429	6.21	50.95	26.81	60.73	26.81	12.75	17.54	30.29	89.66	11.07	19.75	30.82	89.66	✓
K1430	6.21	60.73	26.81	50.95	26.81	11.08	19.75	30.83	89.66	12.74	17.54	30.28	89.66	✓
K1431	4.19	50.95	41.41	50.95	41.41	6.49	30.82	37.31	89.66	7.38	30.82	38.20	89.66	✓
K1432	8.00	50.95	26.81	50.95	26.81	17.05	13.62	30.67	89.66	17.46	13.62	31.07	89.66	✓
K1433	3.90	50.95	41.41	50.95	41.41	8.72	33.15	41.87	89.66	3.56	33.15	36.71	89.66	✓
K1434	3.90	50.95	39.80	50.95	39.80	1.27	32.58	33.85	89.66	13.58	32.58	46.15	89.66	✓
K1457	3.90	50.95	41.41	50.95	41.41	8.72	33.15	41.87	89.66	3.56	33.15	36.72	89.66	✓
K1458	3.90	50.95	39.80	50.95	39.80	1.28	32.58	33.85	89.66	13.58	32.58	46.16	89.66	✓
K1459	4.19	50.95	41.41	50.95	41.41	6.49	30.82	37.31	89.66	7.38	30.82	38.20	89.66	✓
K1460	8.00	50.95	26.81	50.95	26.81	17.05	13.62	30.67	89.66	17.46	13.62	31.07	89.66	✓
K1502	3.40	45.25	36.81	40.17	36.81	5.65	33.74	39.39	79.23	4.43	31.65	36.08	79.23	✓
K1503	3.40	40.17	36.81	45.25	36.81	4.42	31.65	36.07	79.23	5.66	33.74	39.40	79.23	✓
K1505	3.90	50.95	39.80	20.62	39.80	9.47	32.62	42.09	89.66	6.03	21.72	27.75	89.66	✓
K1506	3.90	20.62	39.80	50.95	39.80	6.03	21.72	27.74	89.66	9.47	32.62	42.09	89.66	✓
K1527	3.90	50.95	41.41	50.95	41.41	3.83	33.20	37.03	89.66	8.41	33.20	41.61	89.66	✓
K1528	3.90	50.95	41.41	50.95	41.41	8.42	33.20	41.61	89.66	3.83	33.20	37.02	89.66	✓
K1529	6.21	50.95	26.81	60.73	26.81	12.74	17.54	30.29	89.66	11.07	19.75	30.82	89.66	✓
K1530	6.21	60.73	26.81	50.95	26.81	11.08	19.75	30.83	89.66	12.73	17.54	30.28	89.66	✓
K1531	4.19	50.95	41.41	50.95	41.41	6.49	30.82	37.32	89.66	7.38	30.82	38.20	89.66	✓
K1532	8.00	50.95	26.81	50.95	26.81	17.05	13.62	30.66	89.66	17.47	13.62	31.08	89.66	✓
K1533	3.90	50.95	41.41	50.95	41.41	8.78	33.15	41.93	89.66	3.50	33.15	36.66	89.66	✓
K1534	3.90	50.95	39.80	50.95	39.80	1.48	32.58	34.05	89.66	13.78	32.58	46.36	89.66	✓
K1557	3.90	50.95	41.41	50.95	41.41	8.77	33.15	41.93	89.66	3.51	33.15	36.66	89.66	✓
K1558	3.90	50.95	39.80	50.95	39.80	1.48	32.58	34.06	89.66	13.78	32.58	46.36	89.66	✓
K1559	4.19	50.95	41.41	50.95	41.41	6.49	30.82	37.31	89.66	7.38	30.82	38.20	89.66	✓
K1560	8.00	50.95	26.81	50.95	26.81	17.05	13.62	30.66	89.66	17.47	13.62	31.08	89.66	✓
K1602	3.40	45.25	36.81	40.17	36.81	5.65	33.74	39.29	79.23	4.43	31.65	36.08	79.23	✓
K1603	3.40	40.17	36.81	45.25	36.81	4.42	31.65	36.07	79.23	5.66	33.74	39.40	79.23	✓
K1605	3.90	50.95	39.80	20.62	39.80	9.40	32.62	42.02	89.66	6.10	21.72	27.82	89.66	✓
K1606	3.90	20.62	39.80	50.95	39.80	6.10	21.72	27.81	89.66	9.40	32.62	42.02	89.66	✓
K1627	3.90	50.95	41.41	50.95	41.41	3.78	33.20	36.98	89.66	8.46	33.20	41.66	89.66	✓
K1628	3.90	50.95	41.41	50.95	41.41	8.47	33.20	41.66	89.66	3.78	33.20	36.98	89.66	✓
K1629	6.21	50.95	26.81	60.73	26.81	12.74	17.54	30.29	89.66	11.07	19.75	30.82	89.66	✓
K1630	6.21	60.73	26.81	50.95	26.81	11.08	19.75	30.83	89.66	12.73	17.54	30.28	89.66	✓
K1631	4.19	50.95	41.41	50.95	41.41	6.50	30.82	37.32	89.66	7.38	30.82	38.20	89.66	✓
K1632	8.00	50.95	26.81	50.95	26.81	17.04	13.62	30.65	89.66	17.47	13.62	31.09	89.66	✓
K1633	3.90	50.95	41.41	50.95	41.41	8.93	33.15	41.98	89.66	3.45	33.15	36.60	89.66	✓
K1634	3.90	50.95	39.80	50.95	39.80	1.66	32.58	34.23	89.66	13.96	32.58	46.54	89.66	✓
K1657	3.90	50.95	41.41	50.95	41.41	8.83	33.15	41.98	89.66	3.45	33.15	36.61	89.66	✓

STAA-CAD V11

FİRMA : 03-23-2005

PROJE : perdeli sistem (perdeli.ST4)

KİRİŞLERİN KESME GÜVENLİK KONTROLU (tm)

Kiriş	Ln	Mplu	Mpla	Mpru	Mpra	Vdl +	Vpl =	Vel <	Vrl	Vdr +	Vpr =	Ver <	Vrr	✓,✗
K1658	3.90	50.95	39.80	50.95	39.80	1.66	32.58	24.24	89.66	13.96	32.58	46.54	89.66	✓
K1659	4.19	50.95	41.41	50.95	41.41	6.49	30.82	27.32	89.66	7.38	30.82	38.20	89.66	✓
K1660	8.00	50.95	26.81	50.95	26.81	17.04	13.62	30.65	89.66	17.47	13.62	31.09	89.66	✓
K1702	3.40	45.25	36.81	40.17	36.81	5.66	33.74	39.40	79.23	4.42	31.65	36.07	79.23	✓
K1703	3.40	40.17	36.81	45.25	36.81	4.41	31.65	36.06	79.23	5.67	33.74	39.41	79.23	✓
K1705	3.90	50.95	39.80	20.62	39.80	9.34	32.62	41.96	89.66	6.16	21.72	27.88	89.66	✓
K1706	3.90	20.62	39.80	50.95	39.80	6.16	21.72	27.88	89.66	9.34	32.62	41.96	89.66	✓
K1727	3.90	50.95	41.41	50.95	41.41	3.74	33.20	36.94	89.66	8.50	33.20	41.70	89.66	✓
K1728	3.90	50.95	41.41	50.95	41.41	8.51	33.20	41.71	89.66	3.74	33.20	36.93	89.66	✓
K1729	6.21	50.95	26.81	60.73	26.81	12.74	17.54	30.28	89.66	11.08	19.75	30.83	89.66	✓
K1730	6.21	60.73	26.81	50.95	26.81	11.09	19.75	30.84	89.66	12.73	17.54	30.27	89.66	✓
K1731	4.19	50.95	41.41	50.95	41.41	6.50	30.82	37.32	89.66	7.37	30.82	38.20	89.66	✓
K1732	8.00	50.95	26.81	50.95	26.81	17.03	13.62	30.65	89.66	17.48	13.62	31.10	89.66	✓
K1733	3.90	50.95	41.41	50.95	41.41	8.87	33.15	42.02	89.66	3.41	33.15	36.56	89.66	✓
K1734	3.90	50.95	39.80	50.95	39.80	1.82	32.58	34.39	89.66	14.12	32.58	46.70	89.66	✓
K1757	3.90	50.95	41.41	50.95	41.41	8.87	33.15	42.02	89.66	3.41	33.15	36.56	89.66	✓
K1758	3.90	50.95	39.80	50.95	39.80	1.82	32.58	34.40	89.66	14.12	32.58	46.70	89.66	✓
K1759	4.19	50.95	41.41	50.95	41.41	6.50	30.82	37.32	89.66	7.38	30.82	38.20	89.66	✓
K1760	8.00	50.95	26.81	50.95	26.81	17.03	13.62	30.65	89.66	17.48	13.62	31.10	89.66	✓
K1802	3.40	45.25	36.81	40.17	36.81	5.67	33.74	39.40	79.23	4.42	31.65	36.07	79.23	✓
K1803	3.40	40.17	36.81	45.25	36.81	4.41	31.65	36.06	79.23	5.67	33.74	39.41	79.23	✓
K1805	3.90	50.95	39.80	20.62	39.80	9.28	32.62	41.90	89.66	6.22	21.72	27.93	89.66	✓
K1806	3.90	20.62	39.80	50.95	39.80	6.21	21.72	27.93	89.66	9.29	32.62	41.91	89.66	✓
K1827	3.90	50.95	41.41	50.95	41.41	3.71	33.20	36.90	89.66	8.54	33.20	41.74	89.66	✓
K1828	3.90	50.95	41.41	50.95	41.41	8.55	33.20	41.74	89.66	3.70	33.20	36.90	89.66	✓
K1829	6.21	50.95	26.81	60.73	26.81	12.74	17.54	30.28	89.66	11.08	19.75	30.83	89.66	✓
K1830	6.21	60.73	26.81	50.95	26.81	11.09	19.75	30.84	89.66	12.73	17.54	30.27	89.66	✓
K1831	4.19	50.95	41.41	50.95	41.41	6.50	30.82	37.32	89.66	7.37	30.82	38.19	89.66	✓
K1832	8.00	50.95	26.81	50.95	26.81	17.02	13.62	30.64	89.66	17.49	13.62	31.10	89.66	✓
K1833	3.90	50.95	41.41	50.95	41.41	8.91	33.15	42.06	89.66	3.37	33.15	36.53	89.66	✓
K1834	3.90	50.95	39.80	50.95	39.80	1.96	32.58	34.53	89.66	14.26	32.58	46.84	89.66	✓
K1857	3.90	50.95	41.41	50.95	41.41	8.90	33.15	42.06	89.66	3.38	33.15	36.53	89.66	✓
K1858	3.90	50.95	39.80	50.95	39.80	1.96	32.58	34.54	89.66	14.26	32.58	46.84	89.66	✓
K1859	4.19	50.95	41.41	50.95	41.41	6.50	30.82	37.32	89.66	7.37	30.82	38.20	89.66	✓
K1860	8.00	50.95	26.81	50.95	26.81	17.02	13.62	30.64	89.66	17.49	13.62	31.10	89.66	✓
K1902	3.40	45.25	36.81	40.17	36.81	5.67	33.74	39.41	79.23	4.41	31.65	36.06	79.23	✓
K1903	3.40	40.17	36.81	45.25	36.81	4.40	31.65	36.05	79.23	5.68	33.74	39.42	79.23	✓
K1905	3.90	50.95	39.80	20.62	39.80	9.24	32.62	41.85	89.66	6.26	21.72	27.98	89.66	✓
K1906	3.90	20.62	39.80	50.95	39.80	6.26	21.72	27.98	89.66	9.24	32.62	41.86	89.66	✓
K1927	3.90	50.95	41.41	50.95	41.41	3.68	33.20	36.87	89.66	8.57	33.20	41.77	89.66	✓
K1928	3.90	50.95	41.41	50.95	41.41	8.58	33.20	41.77	89.66	3.67	33.20	36.87	89.66	✓
K1929	6.21	50.95	26.81	60.73	26.81	12.74	17.54	30.28	89.66	11.08	19.75	30.83	89.66	✓
K1930	6.21	60.73	26.81	50.95	26.81	11.09	19.75	30.84	89.66	12.73	17.54	30.27	89.66	✓
K1931	4.19	50.95	41.41	50.95	41.41	6.50	30.82	37.32	89.66	7.37	30.82	38.19	89.66	✓
K1932	8.00	50.95	26.81	50.95	26.81	17.02	13.62	30.63	89.66	17.49	13.62	31.11	89.66	✓
K1933	3.90	50.95	41.41	50.95	41.41	8.94	33.15	42.09	89.66	3.34	33.15	36.49	89.66	✓
K1934	3.90	50.95	39.80	50.95	39.80	2.08	32.58	34.66	89.66	14.38	32.58	46.96	89.66	✓
K1957	3.90	50.95	41.41	50.95	41.41	8.94	33.15	42.09	89.66	3.34	33.15	36.50	89.66	✓
K1958	3.90	50.95	39.80	50.95	39.80	2.08	32.58	34.66	89.66	14.39	32.58	46.98	89.66	✓
K1959	4.19	50.95	41.41	50.95	41.41	6.50	30.82	37.32	89.66	7.37	30.82	38.19	89.66	✓
K1960	8.00	50.95	26.81	50.95	26.81	17.02	13.62	30.63	89.66	17.49	13.62	31.11	89.66	✓
K2002	3.40	45.25	36.81	40.17	36.81	5.67	33.74	39.41	79.23	4.41	31.65	36.06	79.23	✓
K2003	3.40	40.17	36.81	45.25	36.81	4.40	31.65	36.05	79.23	5.68	33.74	39.42	79.23	✓
K2005	3.90	50.95	39.80	20.62	39.80	9.19	32.62	41.81	89.66	6.31	21.72	28.02	89.66	✓
K2006	3.90	20.62	39.80	50.95	39.80	6.30	21.72	28.02	89.66	9.20	32.62	41.82	89.66	✓
K2027	3.90	50.95	41.41	50.95	41.41	3.65	33.20	36.85	89.66	8.60	33.20	41.79	89.66	✓
K2028	3.90	50.95	41.41	50.95	41.41	8.60	33.20	41.80	89.66	3.64	33.20	36.84	89.66	✓
K2029	6.21	50.95	26.81	60.73	26.81	12.74	17.54	30.28	89.66	11.08	19.75	30.83	89.66	✓
K2030	6.21	60.73	26.81	50.95	26.81	11.09	19.75	30.84	89.66	12.73	17.54	30.27	89.66	✓
K2031	4.19	50.95	41.41	50.95	41.41	6.50	30.82	37.33	89.66	7.37	30.82	38.19	89.66	✓
K2032	8.00	50.95	26.81	50.95	26.81	17.01	13.62	30.63	89.66	17.50	13.62	31.12	89.66	✓
K2033	3.90	50.95	41.41	50.95	41.41	8.96	33.15	42.12	89.66	3.32	33.15	36.47	89.66	✓
K2034	3.90	50.95	39.80	50.95	39.80	2.19	32.58	34.77	89.66	14.49	32.58	47.07	89.66	✓
K2057	3.90	50.95	41.41	50.95	41.41	8.96	33.15	42.12	89.66	3.32	33.15	36.47	89.66	✓
K2058	3.90	50.95	39.80	50.95	39.80	2.19	32.58	34.77	89.66	14.50	32.58	47.07	89.66	✓
K2059	4.19	50.95	41.41	50.95	41.41	6.50	30.82	37.32	89.66	7.37	30.82	38.19	89.66	✓
K2060	8.00	50.95	26.81	50.95	26.81	17.01	13.62	30.63	89.66	17.50	13.62	31.12	89.66	✓
K2102	3.40	45.25	36.81	40.17	36.81	5.68	33.74	39.42	79.23	4.40	31.65	36.05	79.23	✓
K2103	3.40	40.17	36.81	45.25	36.81	4.39	31.65	36.05	79.23	5.69	33.74	39.43	79.23	✓
K2105	3.90	50.95	39.80	20.62	39.80	9.16	32.62	41.78	89.66	6.34	21.72	28.06	89.66	✓
K2106	3.90	20.62	39.80	50.95	39.80	6.34	21.72	28.06	89.66	9.16	32.62	41.78	89.66	✓
K2127	3.90	50.95	41.41	50.95	41.41	3.63	33.20	36.82	89.66	8.62	33.20	41.82	89.66	✓
K2128	3.90	50.95	41.41	50.95	41.41	8.62	33.20	41.82	89.66	3.62	33.20	36.82	89.66	✓
K2129	6.21	50.95	26.81	60.73	26.81	12.73	17.54	30.28	89.66	11.08	19.75	30.83	89.66	✓
K2130	6.21	60.73	26.81	50.95	26.81	11.09	19.75	30.84	89.66	12.72	17.54	30.27	89.66	✓
K2131	4.19	50.95	41.41	50.95	41.41	6.50	30.82	37.33	89.66	7.37	30.82	38.19	89.66	✓
K2132	8.00	50.95	26.81	50.95	26.81	17.01	13.62	30.62	89.66	17.51	13.62	31.12	89.66	✓
K2133	3.90	50.95	41.41	50.95	41.41	8.99	33.15	42.14	89.66	3.29	33.15	36.45	89.66	✓
K2134	3.90	50.95	39.80	50.95	39.80	2.29	32.58	34.87	89.66	14.59	32.58	47.17	89.66	✓
K2157	3.90	50.95	41.41	50.95	41.41	8.98	33.15	42.14	89.66	3.29	33.15	36.45	89.66	✓
K2158	3.90	50.95	39.80	50.95	39.80	2.29	32.58	34.87	89.66	14.60	32.58	47.17	89.66	✓
K2159	4.19	50.95	41.41	50.95	41.41	6.50	30.82	37.32	89.66	7.37	30.82	38.19	89.66	✓
K2160	8.00	50.95	26.81	50.95	26.81	17.01	13.62	30.62	89.66	17.51	13.62	31.12	89.66	✓
K2202	3.40	45.25	36.81	40.17	36.81	5.68	33.74	39.42	79.23	4.40	31.65	36.05	79.23	✓
K2203	3.40	40.17	36.81	45.25	36.81	4.39	31.65	36.04	79.23	5.69	33.74	39.43	79.23	✓
K2205	3.90	50.95	39.80	20.62	39.80	9.12	32.62	41.74	89.66	6.38	21.72	28.10	89.66	✓
K2206	3.90	20.62	39.80	50.95	39.80	6.37	21.72	28.09	89.66	9.12	32.62	41.75	89.66	✓

STAA-CAD V11

FİRMA :

03-23-2005

PROJE : perdeli sistem

(perdeli.ST4)

KİRİŞLERİN KESME GÜVENLİK KONTROLU (tm)

Kiriş	Ln	Mplu	Mpla	Mpru	Mpra	Vdl +	Vpl =	Vel <	Vrl	Vdr +	Vpr =	Ver <	Vrr	✓,✗
K2227	3.90	50.95	41.41	50.95	41.41	3.61	33.20	36.80	89.66	8.64	33.20	41.83	89.66	✓
K2228	3.90	50.95	41.41	50.95	41.41	8.64	33.20	41.84	89.66	3.60	33.20	36.80	89.66	✓
K2229	6.21	50.95	26.81	60.73	26.81	12.73	17.54	30.28	89.66	11.08	19.75	30.83	89.66	✓
K2230	6.21	60.73	26.81	50.95	26.81	11.09	19.75	30.84	89.66	12.72	17.54	30.27	89.66	✓
K2231	4.19	50.95	41.41	50.95	41.41	6.50	30.82	37.32	89.66	7.37	30.82	38.19	89.66	✓
K2232	8.00	50.95	26.81	50.95	26.81	17.00	13.62	30.62	89.66	17.51	13.62	31.13	89.66	✓
K2233	3.90	50.95	41.41	50.95	41.41	9.01	33.15	42.16	89.66	3.27	33.15	36.42	89.66	✓
K2234	3.90	50.95	39.80	50.95	39.80	2.38	32.58	34.95	89.66	14.68	32.58	47.26	89.66	✓
K2257	3.90	50.95	41.41	50.95	41.41	9.00	33.15	42.16	89.66	3.28	33.15	36.43	89.66	✓
K2258	3.90	50.95	39.80	50.95	39.80	2.38	32.58	34.96	89.66	14.68	32.58	47.26	89.66	✓
K2259	4.19	50.95	41.41	50.95	41.41	6.50	30.82	37.32	89.66	7.37	30.82	38.19	89.66	✓
K2260	8.00	50.95	26.81	50.95	26.81	17.00	13.62	30.62	89.66	17.51	13.62	31.13	89.66	✓
K2302	3.40	45.25	36.81	40.17	36.81	5.68	33.74	39.42	79.23	4.40	31.65	36.05	79.23	✓
K2303	3.40	40.17	36.81	45.25	36.81	4.39	31.65	36.04	79.23	5.69	33.74	39.43	79.23	✓
K2305	3.90	50.95	39.80	20.62	39.80	9.89	32.62	41.71	89.66	6.41	21.72	28.12	89.66	✓
K2306	3.90	20.62	39.80	50.95	39.80	6.40	21.72	28.12	89.66	9.10	32.62	41.72	89.66	✓
K2327	3.90	50.95	41.41	50.95	41.41	3.59	33.20	36.79	89.66	8.65	33.20	41.85	89.66	✓
K2328	3.90	50.95	41.41	50.95	41.41	8.66	33.20	41.86	89.66	3.59	33.20	36.78	89.66	✓
K2329	6.21	50.95	26.81	60.73	26.81	12.73	17.54	30.27	89.66	11.09	19.75	30.84	89.66	✓
K2330	6.21	60.73	26.81	50.95	26.81	11.09	19.75	30.84	89.66	12.72	17.54	30.27	89.66	✓
K2331	4.19	50.95	41.41	50.95	41.41	6.50	30.82	37.33	89.66	7.37	30.82	38.19	89.66	✓
K2332	8.00	50.95	26.81	50.95	26.81	17.00	13.62	30.61	89.66	17.52	13.62	31.13	89.66	✓
K2333	3.90	50.95	41.41	50.95	41.41	9.02	33.15	42.18	89.66	3.26	33.15	36.41	89.66	✓
K2334	3.90	50.95	39.80	50.95	39.80	2.45	32.58	35.03	89.66	14.76	32.58	47.33	89.66	✓
K2357	3.90	50.95	41.41	50.95	41.41	9.02	33.15	42.17	89.66	3.26	33.15	36.41	89.66	✓
K2358	3.90	50.95	39.80	50.95	39.80	2.46	32.58	35.03	89.66	14.76	32.58	47.34	89.66	✓
K2359	4.19	50.95	41.41	50.95	41.41	6.50	30.82	37.32	89.66	7.37	30.82	38.19	89.66	✓
K2360	8.00	50.95	26.81	50.95	26.81	17.00	13.62	30.61	89.66	17.52	13.62	31.13	89.66	✓
K2402	3.40	45.25	36.81	40.17	36.81	5.68	33.74	39.43	79.23	4.39	31.65	36.05	79.23	✓
K2403	3.40	40.17	36.81	45.25	36.81	4.39	31.65	36.04	79.23	5.69	33.74	39.43	79.23	✓
K2405	3.90	50.95	39.80	20.62	39.80	9.87	32.62	41.69	89.66	6.43	21.72	28.15	89.66	✓
K2406	3.90	20.62	39.80	50.95	39.80	6.43	21.72	28.15	89.66	9.07	32.62	41.69	89.66	✓
K2427	3.90	50.95	41.41	50.95	41.41	3.58	33.20	36.77	89.66	8.67	33.20	41.86	89.66	✓
K2428	3.90	50.95	41.41	50.95	41.41	8.67	33.20	41.87	89.66	3.57	33.20	36.77	89.66	✓
K2429	6.21	50.95	26.81	60.73	26.81	12.73	17.54	30.27	89.66	11.09	19.75	30.84	89.66	✓
K2430	6.21	60.73	26.81	50.95	26.81	11.10	19.75	30.84	89.66	12.72	17.54	30.27	89.66	✓
K2431	4.19	50.95	41.41	50.95	41.41	6.50	30.82	37.33	89.66	7.37	30.82	38.19	89.66	✓
K2432	8.00	50.95	26.81	50.95	26.81	16.99	13.62	30.61	89.66	17.52	13.62	31.14	89.66	✓
K2433	3.90	50.95	41.41	50.95	41.41	9.04	33.15	42.19	89.66	3.24	33.15	36.40	89.66	✓
K2434	3.90	50.95	39.80	50.95	39.80	2.52	32.58	35.10	89.66	14.83	32.58	47.40	89.66	✓
K2457	3.90	50.95	41.41	50.95	41.41	9.03	33.15	42.19	89.66	3.25	33.15	36.40	89.66	✓
K2458	3.90	50.95	39.80	50.95	39.80	2.53	32.58	35.10	89.66	14.83	32.58	47.41	89.66	✓
K2459	4.19	50.95	41.41	50.95	41.41	6.50	30.82	37.32	89.66	7.37	30.82	38.19	89.66	✓
K2460	8.00	50.95	26.81	50.95	26.81	16.99	13.62	30.61	89.66	17.52	13.62	31.14	89.66	✓
K2502	3.40	45.25	36.81	40.17	36.81	5.69	33.74	39.43	79.23	4.39	31.65	36.04	79.23	✓
K2503	3.40	40.17	36.81	45.25	36.81	4.38	31.65	36.03	79.23	5.70	33.74	39.44	79.23	✓
K2505	3.90	50.95	39.80	20.62	39.80	9.84	32.62	41.66	89.66	6.46	21.72	28.17	89.66	✓
K2506	3.90	20.62	39.80	50.95	39.80	6.45	21.72	28.17	89.66	9.05	32.62	41.67	89.66	✓
K2527	3.90	50.95	41.41	50.95	41.41	3.57	33.20	36.76	89.66	8.68	33.20	41.88	89.66	✓
K2528	3.90	50.95	41.41	50.95	41.41	8.69	33.20	41.88	89.66	3.56	33.20	36.76	89.66	✓
K2529	6.21	50.95	26.81	60.73	26.81	12.73	17.54	30.27	89.66	11.09	19.75	30.84	89.66	✓
K2530	6.21	60.73	26.81	50.95	26.81	11.10	19.75	30.85	89.66	12.72	17.54	30.26	89.66	✓
K2531	4.19	50.95	41.41	50.95	41.41	6.50	30.82	37.32	89.66	7.37	30.82	38.19	89.66	✓
K2532	8.00	50.95	26.81	50.95	26.81	16.99	13.62	30.60	89.66	17.52	13.62	31.14	89.66	✓
K2533	3.90	50.95	41.41	50.95	41.41	9.05	33.15	42.20	89.66	3.23	33.15	36.39	89.66	✓
K2534	3.90	50.95	39.80	50.95	39.80	2.59	32.58	35.16	89.66	14.89	32.58	47.47	89.66	✓
K2557	3.90	50.95	41.41	50.95	41.41	9.05	33.15	42.20	89.66	3.23	33.15	36.39	89.66	✓
K2558	3.90	50.95	39.80	50.95	39.80	2.59	32.58	35.17	89.66	14.89	32.58	47.47	89.66	✓
K2559	4.19	50.95	41.41	50.95	41.41	6.50	30.82	37.32	89.66	7.37	30.82	38.19	89.66	✓
K2560	8.00	50.95	26.81	50.95	26.81	16.99	13.62	30.60	89.66	17.52	13.62	31.14	89.66	✓
K2602	3.40	45.25	36.81	40.17	36.81	5.69	33.74	39.43	79.23	4.39	31.65	36.04	79.23	✓
K2603	3.40	40.17	36.81	45.25	36.81	4.38	31.65	36.03	79.23	5.70	33.74	39.44	79.23	✓
K2605	3.90	50.95	39.80	20.62	39.80	9.02	32.62	41.64	89.66	6.48	21.72	28.20	89.66	✓
K2606	3.90	20.62	39.80	50.95	39.80	6.47	21.72	28.19	89.66	9.03	32.62	41.64	89.66	✓
K2627	3.90	50.95	41.41	50.95	41.41	3.56	33.20	36.75	89.66	8.69	33.20	41.89	89.66	✓
K2628	3.90	50.95	41.41	50.95	41.41	8.70	33.20	41.89	89.66	3.55	33.20	36.75	89.66	✓
K2629	6.21	50.95	26.81	60.73	26.81	12.73	17.54	30.27	89.66	11.09	19.75	30.84	89.66	✓
K2630	6.21	60.73	26.81	50.95	26.81	11.10	19.75	30.85	89.66	12.72	17.54	30.26	89.66	✓
K2631	4.19	50.95	41.41	50.95	41.41	6.50	30.82	37.32	89.66	7.37	30.82	38.19	89.66	✓
K2632	8.00	50.95	26.81	50.95	26.81	16.98	13.62	30.60	89.66	17.53	13.62	31.14	89.66	✓
K2633	3.90	50.95	39.80	50.95	39.80	9.06	32.58	41.63	89.66	3.22	32.58	35.80	89.66	✓
K2634	3.90	50.95	39.80	50.95	39.80	2.64	32.58	35.22	89.66	14.95	32.58	47.52	89.66	✓
K2657	3.90	50.95	39.80	50.95	39.80	9.06	32.58	41.63	89.66	3.22	32.58	35.80	89.66	✓
K2658	3.90	50.95	39.80	50.95	39.80	2.65	32.58	35.22	89.66	14.95	32.58	47.53	89.66	✓
K2659	4.19	50.95	41.41	50.95	41.41	6.50	30.82	37.32	89.66	7.37	30.82	38.19	89.66	✓
K2660	8.00	50.95	26.81	50.95	26.81	16.98	13.62	30.60	89.66	17.53	13.62	31.14	89.66	✓
K2702	3.40	45.25	36.81	40.17	36.81	5.69	33.74	39.43	79.23	4.39	31.65	36.04	79.23	✓
K2703	3.40	40.17	36.81	45.25	36.81	4.38	31.65	36.03	79.23	5.70	33.74	39.44	79.23	✓
K2705	3.90	50.95	39.80	20.62	39.80	9.00	32.62	41.62	89.66	6.50	21.72	28.22	89.66	✓
K2706	3.90	20.62	39.80	50.95	39.80	6.49	21.72	28.21	89.66	9.01	32.62	41.62	89.66	✓
K2727	3.90	50.95	39.80	50.95	39.80	3.55	32.62	36.17	89.66	8.70	32.62	41.32	89.66	✓
K2728	3.90	50.95	39.80	50.95	39.80	8.71	32.62	41.32	89.66	3.54	32.62	36.16	89.66	✓
K2729	6.21	50.95	26.81	60.73	26.81	12.73	17.54	30.27	89.66	11.09	19.75	30.84	89.66	✓
K2730	6.21	60.73	26.81	50.95	26.81	11.10	19.75	30.85	89.66	12.72	17.54	30.26	89.66	✓
K2731	4.19	50.95	41.41	50.95	41.41	6.50	30.82	37.32	89.66	7.37	30.82	38.20	89.66	✓
K2732	8.00	50.95	26.81	50.95	26.81	16.98	13.62	30.59	89.66	17.53	13.62	31.15	89.66	✓
K2733	3.90	50.95	39.80	50.95	39.80	9.07	32.58	41.64	89.66	3.21	32.58	35.79	89.66	✓

STAA-CAD V11

FİRMA : 03-23-2005

PROJE : perdeli sistem (perdeli.ST4)

KİRİŞLERİN KESME GÜVENLİK KONTROLU (tm)

Kiriş	Ln	Mplu	Mpla	Mpru	Mpra	Vdl +	Vpl =	Vel <	Vrl	Vdr +	Vpr =	Ver <	Vrr	✓,X
K2734	3.90	50.95	39.80	50.95	39.80	2.69	32.58	35.27	89.66	15.00	32.58	47.57	89.66	✓
K2757	3.90	50.95	39.80	50.95	39.80	9.06	32.58	41.64	89.66	3.21	32.58	35.79	89.66	✓
K2758	3.90	50.95	39.80	50.95	39.80	2.70	32.58	35.28	89.66	15.00	32.58	47.58	89.66	✓
K2759	4.19	50.95	41.41	50.95	41.41	6.50	30.82	37.32	89.66	7.37	30.82	38.20	89.66	✓
K2760	8.00	50.95	26.81	50.95	26.81	16.98	13.62	30.59	89.66	17.53	13.62	31.15	89.66	✓
K2802	3.40	45.25	36.81	40.17	36.81	5.69	33.74	39.43	79.23	4.39	31.65	36.04	79.23	✓
K2803	3.40	40.17	36.81	45.25	36.81	4.38	31.65	36.03	79.23	5.70	33.74	39.44	79.23	✓
K2805	3.90	50.95	39.80	20.62	39.80	8.98	32.62	41.60	89.66	6.52	21.72	28.23	89.66	✓
K2806	3.90	20.62	39.80	50.95	39.80	6.51	21.72	28.23	89.66	8.99	32.62	41.61	89.66	✓
K2827	3.90	50.95	39.80	50.95	39.80	3.54	32.62	36.16	89.66	8.71	32.62	41.33	89.66	✓
K2828	3.90	50.95	39.80	50.95	39.80	8.71	32.62	41.33	89.66	3.53	32.62	36.15	89.66	✓
K2829	6.21	50.95	26.81	60.73	26.81	12.73	17.54	30.27	89.66	11.09	19.75	30.84	89.66	✓
K2830	6.21	60.73	26.81	50.95	26.81	11.10	19.75	30.85	89.66	12.72	17.54	30.26	89.66	✓
K2831	4.19	50.95	41.41	50.95	41.41	6.50	30.82	37.32	89.66	7.38	30.82	38.20	89.66	✓
K2832	8.00	50.95	26.81	50.95	26.81	16.97	13.62	30.59	89.66	17.54	13.62	31.15	89.66	✓
K2833	3.90	50.95	39.80	50.95	39.80	9.07	32.58	41.65	89.66	3.21	32.58	35.78	89.66	✓
K2834	3.90	50.95	39.80	50.95	39.80	2.74	32.58	35.32	89.66	15.04	32.58	47.62	89.66	✓
K2857	3.90	50.95	39.80	50.95	39.80	9.07	32.58	41.65	89.66	3.21	32.58	35.78	89.66	✓
K2858	3.90	50.95	39.80	50.95	39.80	2.75	32.58	35.32	89.66	15.05	32.58	47.63	89.66	✓
K2859	4.19	50.95	41.41	50.95	41.41	6.49	30.82	37.32	89.66	7.38	30.82	38.20	89.66	✓
K2860	8.00	50.95	26.81	50.95	26.81	16.97	13.62	30.59	89.66	17.54	13.62	31.15	89.66	✓
K2902	3.40	45.25	36.81	40.17	36.81	5.70	33.74	39.44	79.23	4.38	31.65	36.04	79.23	✓
K2903	3.40	40.17	36.81	45.25	36.81	4.38	31.65	36.03	79.23	5.71	33.74	39.44	79.23	✓
K2905	3.90	50.95	39.80	20.62	39.80	8.97	32.62	41.59	89.66	6.53	21.72	28.25	89.66	✓
K2906	3.90	20.62	39.80	50.95	39.80	6.53	21.72	28.25	89.66	8.97	32.62	41.59	89.66	✓
K2927	3.90	50.95	39.80	50.95	39.80	3.53	32.62	36.15	89.66	8.72	32.62	41.34	89.66	✓
K2928	3.90	50.95	39.80	50.95	39.80	8.72	32.62	41.34	89.66	3.52	32.62	36.14	89.66	✓
K2929	6.21	50.95	26.81	60.73	26.81	12.73	17.54	30.27	89.66	11.09	19.75	30.84	89.66	✓
K2930	6.21	60.73	26.81	50.95	26.81	11.10	19.75	30.85	89.66	12.72	17.54	30.26	89.66	✓
K2931	4.19	50.95	41.41	50.95	41.41	6.49	30.82	37.32	89.66	7.38	30.82	38.20	89.66	✓
K2932	8.00	50.95	26.81	50.95	26.81	16.97	13.62	30.59	89.66	17.54	13.62	31.16	89.66	✓
K2933	3.90	50.95	39.80	50.95	39.80	9.08	32.58	41.66	89.66	3.20	32.58	35.77	89.66	✓
K2934	3.90	50.95	39.80	50.95	39.80	2.78	32.58	35.36	89.66	15.09	32.58	47.67	89.66	✓
K2957	3.90	50.95	39.80	50.95	39.80	9.08	32.58	41.66	89.66	3.20	32.58	35.78	89.66	✓
K2958	3.90	50.95	39.80	50.95	39.80	2.79	32.58	35.37	89.66	15.09	32.58	47.67	89.66	✓
K2959	4.19	50.95	41.41	50.95	41.41	6.49	30.82	37.31	89.66	7.38	30.82	38.20	89.66	✓
K2960	8.00	50.95	26.81	50.95	26.81	16.97	13.62	30.59	89.66	17.54	13.62	31.16	89.66	✓
K3002	3.40	45.25	36.81	40.17	36.81	5.70	33.74	39.44	79.23	4.38	31.65	36.03	79.23	✓
K3003	3.40	40.17	36.81	45.25	36.81	4.37	31.65	36.03	79.23	5.71	33.74	39.45	79.23	✓
K3005	3.90	50.95	39.80	20.62	39.80	8.95	32.62	41.57	89.66	6.55	21.72	28.26	89.66	✓
K3006	3.90	20.62	39.80	50.95	39.80	6.54	21.72	28.26	89.66	8.96	32.62	41.58	89.66	✓
K3027	3.90	50.95	39.80	50.95	39.80	3.52	32.62	36.14	89.66	8.72	32.62	41.34	89.66	✓
K3028	3.90	50.95	39.80	50.95	39.80	8.73	32.62	41.35	89.66	3.52	32.62	36.14	89.66	✓
K3029	6.21	50.95	26.81	60.73	26.81	12.73	17.54	30.27	89.66	11.09	19.75	30.84	89.66	✓
K3030	6.21	60.73	26.81	50.95	26.81	11.10	19.75	30.85	89.66	12.72	17.54	30.26	89.66	✓
K3031	4.19	50.95	41.41	50.95	41.41	6.49	30.82	37.31	89.66	7.38	30.82	38.20	89.66	✓
K3032	8.00	50.95	26.81	50.95	26.81	16.97	13.62	30.58	89.66	17.54	13.62	31.16	89.66	✓
K3033	3.90	50.95	39.80	50.95	39.80	9.09	32.58	41.67	89.66	3.19	32.58	35.77	89.66	✓
K3034	3.90	50.95	39.80	50.95	39.80	2.82	32.58	35.40	89.66	15.13	32.58	47.70	89.66	✓
K3057	3.90	50.95	39.80	50.95	39.80	9.09	32.58	41.67	89.66	3.19	32.58	35.77	89.66	✓
K3058	3.90	50.95	39.80	50.95	39.80	2.83	32.58	35.41	89.66	15.13	32.58	47.71	89.66	✓
K3059	4.19	50.95	41.41	50.95	41.41	6.49	30.82	37.31	89.66	7.38	30.82	38.21	89.66	✓
K3060	8.00	50.95	26.81	50.95	26.81	16.97	13.62	30.58	89.66	17.54	13.62	31.16	89.66	✓
K3102	3.40	45.25	36.81	40.17	36.81	5.70	33.74	39.44	79.23	4.38	31.65	36.03	79.23	✓
K3103	3.40	40.17	36.81	45.25	36.81	4.37	31.65	36.02	79.23	5.71	33.74	39.45	79.23	✓
K3105	3.90	50.95	39.80	20.62	39.80	8.94	32.62	41.56	89.66	6.56	21.72	28.28	89.66	✓
K3106	3.90	20.62	39.80	50.95	39.80	6.56	21.72	28.27	89.66	8.94	32.62	41.56	89.66	✓
K3127	3.90	50.95	39.80	50.95	39.80	3.52	32.62	36.13	89.66	8.73	32.62	41.35	89.66	✓
K3128	3.90	50.95	39.80	50.95	39.80	8.74	32.62	41.36	89.66	3.51	32.62	36.13	89.66	✓
K3129	6.21	50.95	26.81	60.73	26.81	12.73	17.54	30.27	89.66	11.09	19.75	30.84	89.66	✓
K3130	6.21	60.73	26.81	50.95	26.81	11.10	19.75	30.85	89.66	12.72	17.54	30.26	89.66	✓
K3131	4.19	50.95	41.41	50.95	41.41	6.49	30.82	37.31	89.66	7.39	30.82	38.21	89.66	✓
K3132	8.00	50.95	26.81	50.95	26.81	16.96	13.62	30.58	89.66	17.55	13.62	31.16	89.66	✓
K3133	3.90	50.95	39.80	50.95	39.80	9.10	32.58	41.67	89.66	3.18	32.58	35.76	89.66	✓
K3134	3.90	50.95	39.80	50.95	39.80	2.86	32.58	35.44	89.66	15.16	32.58	47.74	89.66	✓
K3157	3.90	50.95	39.80	50.95	39.80	9.10	32.58	41.67	89.66	3.18	32.58	35.76	89.66	✓
K3158	3.90	50.95	39.80	50.95	39.80	2.87	32.58	35.44	89.66	15.17	32.58	47.75	89.66	✓
K3159	4.19	50.95	41.41	50.95	41.41	6.48	30.82	37.31	89.66	7.39	30.82	38.21	89.66	✓
K3160	8.00	50.95	26.81	50.95	26.81	16.96	13.62	30.58	89.66	17.55	13.62	31.16	89.66	✓
K3202	3.40	45.25	36.81	40.17	36.81	5.70	33.74	39.44	79.23	4.38	31.65	36.03	79.23	✓
K3203	3.40	40.17	36.81	45.25	36.81	4.37	31.65	36.02	79.23	5.71	33.74	39.45	79.23	✓
K3205	3.90	50.95	39.80	20.62	39.80	8.93	32.62	41.55	89.66	6.57	21.72	28.29	89.66	✓
K3206	3.90	20.62	39.80	50.95	39.80	6.57	21.72	28.29	89.66	8.93	32.62	41.55	89.66	✓
K3227	3.90	50.95	39.80	50.95	39.80	3.51	32.62	36.13	89.66	8.74	32.62	41.36	89.66	✓
K3228	3.90	50.95	39.80	50.95	39.80	8.75	32.62	41.36	89.66	3.50	32.62	36.12	89.66	✓
K3229	6.21	50.95	26.81	60.73	26.81	12.73	17.54	30.27	89.66	11.09	19.75	30.84	89.66	✓
K3230	6.21	60.73	26.81	50.95	26.81	11.10	19.75	30.85	89.66	12.72	17.54	30.26	89.66	✓
K3231	4.19	50.95	41.41	50.95	41.41	6.48	30.82	37.30	89.66	7.39	30.82	38.21	89.66	✓
K3232	8.00	50.95	26.81	50.95	26.81	16.96	13.62	30.58	89.66	17.55	13.62	31.16	89.66	✓
K3233	3.90	50.95	39.80	50.95	39.80	9.11	32.58	41.68	89.66	3.17	32.58	35.75	89.66	✓
K3234	3.90	50.95	39.80	50.95	39.80	2.90	32.58	35.47	89.66	15.20	32.58	47.78	89.66	✓
K3257	3.90	50.95	39.80	50.95	39.80	9.10	32.58	41.68	89.66	3.18	32.58	35.75	89.66	✓
K3258	3.90	50.95	39.80	50.95	39.80	2.90	32.58	35.48	89.66	15.20	32.58	47.78	89.66	✓
K3259	4.19	50.95	41.41	50.95	41.41	6.48	30.82	37.30	89.66	7.39	30.82	38.22	89.66	✓
K3260	8.00	50.95	26.81	50.95	26.81	16.96	13.62	30.58	89.66	17.55	13.62	31.17	89.66	✓
K3302	3.40	45.25	36.81	40.17	36.81	5.70	33.74	39.44	79.23	4.38	31.65	36.03	79.23	✓
K3303	3.40	40.17	36.81	45.25	36.81	4.37	31.65	36.02	79.23	5.71	33.74	39.45	79.23	✓

STAA-CAD V11

FİRMA : 03-23-2005

PROJE : perdeli sistem (perdeli.ST4)

KİRİŞLERİN KESME GÜVENLİK KONTROLÜ (tm)

Kiriş	Ln	Mplu	Mpla	Mpru	Mpra	Vdl +	Vpl =	Vel <	Vrl	Vdr +	Vpr =	Ver <	Vrr	✓,X
K3305	3.90	50.95	39.80	20.62	39.80	8.91	32.62	41.53	89.66	6.59	21.72	28.30	89.66	✓
K3306	3.90	20.62	39.80	50.95	39.80	6.58	21.72	28.30	89.66	8.92	32.62	41.54	89.66	✓
K3327	3.90	50.95	39.80	50.95	39.80	3.50	32.62	36.12	89.66	8.75	32.62	41.37	89.66	✓
K3328	3.90	50.95	39.80	50.95	39.80	8.75	32.62	41.37	89.66	3.49	32.62	36.11	89.66	✓
K3329	6.21	50.95	26.81	60.73	26.81	12.73	17.54	30.27	89.66	11.09	19.75	30.84	89.66	✓
K3320	6.21	60.73	26.81	50.95	26.81	11.10	19.75	30.85	89.66	12.72	17.54	30.26	89.66	✓
K3321	4.19	50.95	41.41	50.95	41.41	6.47	30.82	37.30	89.66	7.40	30.82	38.22	89.66	✓
K3332	8.00	50.95	26.81	50.95	26.81	16.96	13.62	30.58	89.66	17.55	13.62	31.17	89.66	✓
K3333	3.90	50.95	39.80	50.95	39.80	9.12	32.58	41.69	89.66	3.16	32.58	35.74	89.66	✓
K3334	3.90	50.95	39.80	50.95	39.80	2.93	32.58	35.51	89.66	15.23	32.58	47.81	89.66	✓
K3357	3.90	50.95	39.80	50.95	39.80	9.11	32.58	41.69	89.66	3.17	32.58	35.74	89.66	✓
K3358	3.90	50.95	39.80	50.95	39.80	2.94	32.58	35.51	89.66	15.24	32.58	47.82	89.66	✓
K3359	4.19	50.95	41.41	50.95	41.41	6.47	30.82	37.29	89.66	7.40	30.82	38.22	89.66	✓
K3360	8.00	50.95	26.81	50.95	26.81	16.96	13.62	30.58	89.66	17.55	13.62	31.17	89.66	✓
K3402	3.40	45.25	36.81	40.17	36.81	5.70	33.74	39.44	79.23	4.38	31.65	36.03	79.23	✓
K3403	3.40	40.17	36.81	45.25	36.81	4.37	31.65	36.03	79.23	5.71	33.74	39.45	79.23	✓
K3405	3.90	50.95	39.80	20.62	39.80	8.90	32.62	41.52	89.66	6.60	21.72	28.32	89.66	✓
K3406	3.90	20.62	39.80	50.95	39.80	6.59	21.72	28.31	89.66	8.91	32.62	41.52	89.66	✓
K3427	3.90	50.95	39.80	50.95	39.80	3.49	32.62	36.11	89.66	8.76	32.62	41.38	89.66	✓
K3428	3.90	50.95	39.80	50.95	39.80	8.76	32.62	41.38	89.66	3.48	32.62	36.10	89.66	✓
K3429	6.21	50.95	26.81	60.73	26.81	12.73	17.54	30.27	89.66	11.09	19.75	30.84	89.66	✓
K3430	6.21	60.73	26.81	50.95	26.81	11.10	19.75	30.85	89.66	12.72	17.54	30.26	89.66	✓
K3431	4.19	50.95	41.41	50.95	41.41	6.46	30.82	37.28	89.66	7.41	30.82	38.23	89.66	✓
K3432	8.00	50.95	26.81	50.95	26.81	16.96	13.62	30.57	89.66	17.55	13.62	31.17	89.66	✓
K3433	3.90	50.95	39.80	50.95	39.80	9.13	32.58	41.70	89.66	3.15	32.58	35.73	89.66	✓
K3434	3.90	50.95	39.80	50.95	39.80	2.96	32.58	35.54	89.66	15.27	32.58	47.84	89.66	✓
K3457	3.90	50.95	39.80	50.95	39.80	9.12	32.58	41.70	89.66	3.16	32.58	35.73	89.66	✓
K3458	3.90	50.95	39.80	50.95	39.80	2.97	32.58	35.54	89.66	15.27	32.58	47.85	89.66	✓
K3459	4.19	50.95	41.41	50.95	41.41	6.46	30.82	37.28	89.66	7.41	30.82	38.23	89.66	✓
K3460	8.00	50.95	26.81	50.95	26.81	16.96	13.62	30.57	89.66	17.55	13.62	31.17	89.66	✓
K3502	3.40	45.25	36.81	40.17	36.81	5.69	33.74	39.43	79.23	4.39	31.65	36.04	79.23	✓
K3503	3.40	40.17	36.81	45.25	36.81	4.38	31.65	36.03	79.23	5.70	33.74	39.44	79.23	✓
K3505	3.90	50.95	39.80	20.62	39.80	8.89	32.62	41.51	89.66	6.61	21.72	28.33	89.66	✓
K3506	3.90	20.62	39.80	50.95	39.80	6.61	21.72	28.32	89.66	8.89	32.62	41.51	89.66	✓
K3527	3.90	50.95	39.80	50.95	39.80	3.48	32.62	36.10	89.66	8.77	32.62	41.39	89.66	✓
K3528	3.90	50.95	39.80	50.95	39.80	8.77	32.62	41.39	89.66	3.47	32.62	36.09	89.66	✓
K3529	6.21	50.95	26.81	60.73	26.81	12.73	17.54	30.28	89.66	11.08	19.75	30.83	89.66	✓
K3520	6.21	60.73	26.81	50.95	26.81	11.09	19.75	30.84	89.66	12.72	17.54	30.27	89.66	✓
K3521	4.19	50.95	41.41	50.95	41.41	6.45	30.82	37.27	89.66	7.42	30.82	38.24	89.66	✓
K3532	8.00	50.95	26.81	50.95	26.81	16.96	13.62	30.57	89.66	17.55	13.62	31.17	89.66	✓
K3533	3.90	50.95	39.80	50.95	39.80	9.14	32.58	41.72	89.66	3.14	32.58	35.72	89.66	✓
K3534	3.90	50.95	39.80	50.95	39.80	2.99	32.58	35.57	89.66	15.30	32.58	47.87	89.66	✓
K3557	3.90	50.95	39.80	50.95	39.80	9.14	32.58	41.71	89.66	3.14	32.58	35.72	89.66	✓
K3558	3.90	50.95	39.80	50.95	39.80	3.00	32.58	35.58	89.66	15.30	32.58	47.88	89.66	✓
K3559	4.19	50.95	41.41	50.95	41.41	6.45	30.82	37.27	89.66	7.42	30.82	38.24	89.66	✓
K3560	8.00	50.95	26.81	50.95	26.81	16.96	13.62	30.57	89.66	17.55	13.62	31.17	89.66	✓
K3602	3.40	45.25	36.81	40.17	36.81	5.69	33.74	39.43	79.23	4.39	31.65	36.04	79.23	✓
K3603	3.40	40.17	36.81	45.25	36.81	4.38	31.65	36.03	79.23	5.70	33.74	39.44	79.23	✓
K3605	3.90	50.95	39.80	20.62	39.80	8.88	32.62	41.50	89.66	6.62	21.72	28.34	89.66	✓
K3606	3.90	20.62	39.80	50.95	39.80	6.62	21.72	28.33	89.66	8.88	32.62	41.50	89.66	✓
K3627	3.90	50.95	39.80	50.95	39.80	3.47	32.62	36.09	89.66	8.78	32.62	41.40	89.66	✓
K3628	3.90	50.95	39.80	50.95	39.80	8.78	32.62	41.40	89.66	3.46	32.62	36.08	89.66	✓
K3629	6.21	50.95	26.81	60.73	26.81	12.74	17.54	30.28	89.66	11.08	19.75	30.83	89.66	✓
K3630	6.21	60.73	26.81	50.95	26.81	11.09	19.75	30.84	89.66	12.73	17.54	30.27	89.66	✓
K3631	4.19	50.95	41.41	50.95	41.41	6.44	30.82	37.26	89.66	7.43	30.82	38.25	89.66	✓
K3632	8.00	50.95	26.81	50.95	26.81	16.95	13.62	30.57	89.66	17.56	13.62	31.17	89.66	✓
K3633	3.90	50.95	39.80	50.95	39.80	9.15	32.58	41.73	89.66	3.13	32.58	35.70	89.66	✓
K3634	3.90	50.95	39.80	50.95	39.80	3.03	32.58	35.60	89.66	15.33	32.58	47.91	89.66	✓
K3657	3.90	50.95	39.80	50.95	39.80	9.15	32.58	41.73	89.66	3.13	32.58	35.71	89.66	✓
K3658	3.90	50.95	39.80	50.95	39.80	3.03	32.58	35.61	89.66	15.33	32.58	47.91	89.66	✓
K3659	4.19	50.95	41.41	50.95	41.41	6.44	30.82	37.26	89.66	7.43	30.82	38.26	89.66	✓
K3660	8.00	50.95	26.81	50.95	26.81	16.95	13.62	30.57	89.66	17.56	13.62	31.17	89.66	✓
K3702	3.40	45.25	36.81	40.17	36.81	5.67	33.74	39.40	79.23	4.42	31.65	36.07	79.23	✓
K3703	3.40	40.17	36.81	45.25	36.81	4.41	31.65	36.06	79.23	5.68	33.74	39.41	79.23	✓
K3705	3.90	50.95	39.80	20.62	39.80	8.87	32.62	41.49	89.66	6.63	21.72	28.35	89.66	✓
K3706	3.90	20.62	39.80	50.95	39.80	6.63	21.72	28.34	89.66	8.87	32.62	41.49	89.66	✓
K3727	3.90	50.95	39.80	50.95	39.80	3.45	32.62	36.07	89.66	8.79	32.62	41.41	89.66	✓
K3728	3.90	50.95	39.80	50.95	39.80	8.80	32.62	41.42	89.66	3.45	32.62	36.07	89.66	✓
K3729	6.21	50.95	26.81	60.73	26.81	12.75	17.54	30.20	89.66	11.06	19.75	30.81	89.66	✓
K3720	6.21	60.73	26.81	50.95	26.81	11.07	19.75	30.82	89.66	12.74	17.54	30.29	89.66	✓
K3721	4.19	50.95	41.41	50.95	41.41	6.40	30.82	37.22	89.66	7.47	30.82	38.29	89.66	✓
K3722	8.00	50.95	26.81	50.95	26.81	16.97	13.62	30.58	89.66	17.55	13.62	31.16	89.66	✓
K3733	3.90	50.95	39.80	50.95	39.80	9.17	32.58	41.75	89.66	3.11	32.58	35.69	89.66	✓
K3734	3.90	50.95	39.80	50.95	39.80	3.06	32.58	35.64	89.66	15.37	32.58	47.94	89.66	✓
K3757	3.90	50.95	39.80	50.95	39.80	9.17	32.58	41.74	89.66	3.11	32.58	35.69	89.66	✓
K3758	3.90	50.95	39.80	50.95	39.80	3.07	32.58	35.64	89.66	15.37	32.58	47.95	89.66	✓
K3759	4.19	50.95	41.41	50.95	41.41	6.40	30.82	37.22	89.66	7.47	30.82	38.29	89.66	✓
K3760	8.00	50.95	26.81	50.95	26.81	16.96	13.62	30.58	89.66	17.55	13.62	31.16	89.66	✓
K3802	3.40	45.25	36.81	40.17	36.81	5.72	33.74	39.46	79.23	4.36	31.65	36.01	79.23	✓
K3803	3.40	40.17	36.81	45.25	36.81	4.35	31.65	36.00	79.23	5.73	33.74	39.47	79.23	✓
K3805	3.90	50.95	39.80	20.62	39.80	8.87	32.62	41.49	89.66	6.63	21.72	28.35	89.66	✓
K3806	3.90	20.62	39.80	50.95	39.80	6.62	21.72	28.25	89.66	8.87	32.62	41.49	89.66	✓
K3827	3.90	50.95	39.80	50.95	39.80	3.44	32.62	36.06	89.66	8.80	32.62	41.42	89.66	✓
K3828	3.90	50.95	39.80	50.95	39.80	8.81	32.62	41.43	89.66	3.44	32.62	36.06	89.66	✓
K3829	6.21	50.95	26.81	60.73	26.81	12.71	17.54	30.26	89.66	11.10	19.75	30.85	89.66	✓
K2830	6.21	60.73	26.81	50.95	26.81	11.12	19.75	30.86	89.66	12.70	17.54	30.25	89.66	✓
K2831	4.19	50.95	41.41	50.95	41.41	6.45	30.82	37.27	89.66	7.42	30.82	38.24	89.66	✓

STAA-CAD V11

FİRMA : 03-23-2005

PROJE : perdeli sistem (perdeli.S74)

KİRİŞLERİN KESME GÜVENLİK KONTROLU (tm)

Kiriş	Ln	Mplu	Mpla	Mpru	Mpra	Vdl +	Vpl =	Vel <	Vrl	Vdr +	Vpr =	Ver <	Vrr	✓,✗
K3822	8.00	50.95	26.81	50.95	26.81	16.93	13.62	30.55	89.66	17.58	13.62	31.20	89.66	✓
K3823	3.90	50.95	39.80	50.95	39.80	9.18	32.58	41.76	89.66	2.10	32.58	35.68	89.66	✓
K3824	3.90	50.95	39.80	50.95	39.80	3.06	32.58	35.63	89.66	15.36	32.58	47.94	89.66	✓
K3857	3.90	50.95	39.80	50.95	39.80	9.18	32.58	41.75	89.66	2.10	32.58	35.68	89.66	✓
K3858	3.90	50.95	39.80	50.95	39.80	3.06	32.58	35.64	89.66	15.37	32.58	47.94	89.66	✓
K3859	4.19	50.95	41.41	50.95	41.41	6.45	30.82	37.27	89.66	7.42	30.82	38.25	89.66	✓
K3860	8.00	50.95	26.81	50.95	26.81	16.93	13.62	30.54	89.66	17.58	13.62	31.20	89.66	✓
K3902	3.40	45.25	36.81	40.17	36.81	5.34	33.74	39.08	79.23	4.74	31.65	36.39	79.23	✓
K3903	3.40	40.17	36.81	45.25	36.81	4.73	31.65	36.38	79.23	5.35	33.74	39.09	79.23	✓
K3905	3.90	50.95	39.80	20.62	39.80	8.81	32.62	41.43	89.66	6.69	21.72	28.41	89.66	✓
K3906	3.90	20.62	39.80	50.95	39.80	6.68	21.72	28.40	89.66	8.82	32.62	41.44	89.66	✓
K3927	3.90	50.95	39.80	50.95	39.80	3.32	32.62	35.94	89.66	8.93	32.62	41.55	89.66	✓
K3928	3.90	50.95	39.80	50.95	39.80	8.93	32.62	41.55	89.66	3.32	32.62	35.93	89.66	✓
K3929	6.21	50.95	26.81	60.73	26.81	12.95	17.54	30.49	89.66	10.87	19.75	30.62	89.66	✓
K3930	6.21	60.73	26.81	50.95	26.81	10.88	19.75	30.63	89.66	12.94	17.54	30.48	89.66	✓
K3931	4.19	50.95	41.41	50.95	41.41	6.00	30.82	36.83	89.66	7.87	30.82	38.69	89.66	✓
K3932	8.00	50.95	26.81	50.95	26.81	17.07	13.62	30.69	89.66	17.44	13.62	31.05	89.66	✓
K3933	3.90	50.95	39.80	50.95	39.80	9.23	32.58	41.91	89.66	2.95	32.58	35.53	89.66	✓
K3934	3.90	50.95	39.80	50.95	39.80	3.44	32.58	36.02	89.66	15.74	32.58	48.32	89.66	✓
K3957	3.90	50.95	39.80	50.95	39.80	9.33	32.58	41.90	89.66	2.95	32.58	35.53	89.66	✓
K3958	3.90	50.95	39.80	50.95	39.80	3.44	32.58	36.02	89.66	15.75	32.58	48.32	89.66	✓
K3959	4.19	50.95	41.41	50.95	41.41	6.00	30.82	36.82	89.66	7.87	30.82	38.69	89.66	✓
K3960	8.00	50.95	26.81	50.95	26.81	17.07	13.62	30.69	89.66	17.44	13.62	31.05	89.66	✓
K4002	3.40	45.25	36.81	40.17	36.81	6.96	33.74	40.70	79.23	3.12	31.65	34.77	79.23	✓
K4003	3.40	40.17	36.81	45.25	36.81	3.11	31.65	34.76	79.23	6.97	33.74	40.71	79.23	✓
K4005	3.90	50.95	39.80	20.62	39.80	9.11	32.62	41.73	89.66	6.39	21.72	28.11	89.66	✓
K4006	3.90	20.62	39.80	50.95	39.80	6.39	21.72	28.11	89.66	9.11	32.62	41.73	89.66	✓
K4027	3.90	50.95	39.80	50.95	39.80	4.57	32.62	37.19	89.66	7.68	32.62	40.30	89.66	✓
K4028	3.90	50.95	39.80	50.95	39.80	7.68	32.62	40.30	89.66	4.57	32.62	37.18	89.66	✓
K4029	6.21	50.95	26.81	60.73	26.81	11.99	17.54	29.54	89.66	11.82	19.75	31.57	89.66	✓
K4030	6.21	60.73	26.81	50.95	26.81	11.82	19.75	31.58	89.66	11.98	17.54	29.53	89.66	✓
K4031	4.19	50.16	41.41	50.95	41.41	8.07	30.56	38.63	89.66	5.80	30.82	36.62	89.66	✓
K4032	8.00	50.16	26.81	50.16	26.81	16.61	13.48	30.08	89.66	17.90	13.48	31.38	89.66	✓
K4033	3.90	50.95	39.80	50.95	39.80	7.94	32.58	40.52	89.66	4.34	32.58	36.91	89.66	✓
K4034	3.90	50.95	39.80	50.95	39.80	0.03	32.58	32.61	89.66	12.33	32.58	44.91	89.66	✓
K4057	3.90	50.95	39.80	50.95	39.80	7.94	32.58	40.52	89.66	4.34	32.58	36.92	89.66	✓
K4058	3.90	50.95	39.80	50.95	39.80	0.03	32.58	32.61	89.66	12.33	32.58	44.91	89.66	✓
K4059	4.19	50.16	41.41	50.95	41.41	8.07	30.56	38.63	89.66	5.80	30.82	36.63	89.66	✓
K4060	8.00	50.16	26.81	50.16	26.81	16.61	13.48	30.08	89.66	17.90	13.48	31.38	89.66	✓

STAA-CAD V11

FİRMA : 03-23-2005

PROJE : perdeli sistem (perdeli.ST4)

TEMELLERE GELEN KOLON YÜKLERİ

S101	GGGGGG	QQQQQQ	Q_Q_Q_	_Q_Q_Q	QQ_QQ_	_QQ_QQ	Q_QQ_Q	Zemin
N	421.87	21.43	(azaltma	Nq=	35.48x0.604 =	21.43)		0.00
Alt Mx	1.97	0.16	0.87	0.09	0.09	0.17	0.07	0.00
Alt My	0.12	0.00	-0.01	0.00	0.00	0.00	-0.01	0.00
	Deprem+X	Deprem-X	Deprem+Y	Deprem-Y	Rüzgar+X	Rüzgar-X	Rüzgar+Y	Rüzgar-Y
N	-99.23	-87.10	-461.02	-375.40	-15.10	-13.07	-64.00	-66.86
Alt Mx	2.36	8.91	3.40	-3.19	0.52	1.45	0.68	-0.64
Alt My	1.64	-0.07	8.57	10.60	0.30	0.01	1.74	2.15

S102	GGGGGG	QQQQQQ	Q_Q_Q_	_Q_Q_Q	QQ_QQ_	_QQ_QQ	Q_QQ_Q	Zemin
N	413.21	20.89	(azaltma	Nq=	34.82x0.600 =	20.89)		0.00
Alt Mx	0.00	0.00	0.00	-0.08	-0.05	0.08	-0.02	0.00
Alt My	0.02	-0.01	-0.01	0.00	0.00	-0.01	-0.01	0.00
	Deprem+X	Deprem-X	Deprem+Y	Deprem-Y	Rüzgar+X	Rüzgar-X	Rüzgar+Y	Rüzgar-Y
N	0.00	0.00	-364.57	-364.57	0.00	0.00	-64.67	-64.67
Alt Mx	3.11	8.78	3.37	-3.37	0.47	1.43	0.67	-0.67
Alt My	0.00	0.00	9.37	9.37	0.00	0.00	1.90	1.90

S103	GGGGGG	QQQQQQ	Q_Q_Q_	_Q_Q_Q	QQ_QQ_	_QQ_QQ	Q_QQ_Q	Zemin
N	421.85	21.43	(azaltma	Nq=	35.47x0.604 =	21.43)		0.00
Alt Mx	-1.97	-0.16	-0.05	-0.11	-0.21	-0.23	0.12	0.00
Alt My	0.12	0.00	0.00	0.00	0.01	0.00	-0.01	0.00
	Deprem+X	Deprem-X	Deprem+Y	Deprem-Y	Rüzgar+X	Rüzgar-X	Rüzgar+Y	Rüzgar-Y
N	99.23	87.10	-375.41	-361.02	15.10	13.07	-66.86	-64.00
Alt Mx	2.36	8.91	3.19	-3.40	0.52	1.45	0.64	-0.68
Alt My	-1.64	0.07	10.60	8.57	-0.30	-0.01	2.15	1.74

S104	GGGGGG	QQQQQQ	Q_Q_Q_	_Q_Q_Q	QQ_QQ_	_QQ_QQ	Q_QQ_Q	Zemin
N	511.75	25.91	(azaltma	Nq=	42.41x0.611 =	25.91)		0.00
Alt Mx	-2.92	-0.31	-0.34	0.04	0.02	-0.38	-0.24	0.00
Alt My	-1.04	-0.13	-0.17	0.05	0.04	-0.17	-0.12	0.00
	Deprem+X	Deprem-X	Deprem+Y	Deprem-Y	Rüzgar+X	Rüzgar-X	Rüzgar+Y	Rüzgar-Y
N	-180.02	-177.34	-224.91	-228.09	-25.25	-24.77	-37.19	-37.87
Alt Mx	2.81	8.30	2.83	-2.49	0.60	1.36	0.57	-0.50
Alt My	4.87	-0.26	7.61	12.69	0.89	0.03	1.54	2.76

S105	GGGGGG	QQQQQQ	Q_Q_Q_	_Q_Q_Q	QQ_QQ_	_QQ_QQ	Q_QQ_Q	Zemin
N	511.76	25.91	(azaltma	Nq=	42.40x0.611 =	25.91)		0.00
Alt Mx	2.92	0.31	-0.07	0.38	0.40	0.30	-0.06	0.00
Alt My	-1.04	-0.13	-0.12	0.00	0.00	-0.16	-0.09	0.00
	Deprem+X	Deprem-X	Deprem+Y	Deprem-Y	Rüzgar+X	Rüzgar-X	Rüzgar+Y	Rüzgar-Y
N	180.02	177.33	-228.10	-224.92	25.25	24.77	-37.87	-37.19
Alt Mx	2.81	8.30	2.49	-2.83	0.60	1.36	0.50	-0.57
Alt My	-4.87	0.26	13.70	7.61	-0.89	-0.03	2.76	1.54

S106	GGGGGG	QQQQQQ	Q_Q_Q_	_Q_Q_Q	QQ_QQ_	_QQ_QQ	Q_QQ_Q	Zemin
N	163.88	8.45	(azaltma	Nq=	14.01x0.603 =	8.45)		0.00
Alt Mx	0.02	0.00	0.00	0.00	0.00	0.00	0.00	0.00
Alt My	0.00	0.00	0.00	0.00	0.00	0.00	0.00	0.00
	Deprem+X	Deprem-X	Deprem+Y	Deprem-Y	Rüzgar+X	Rüzgar-X	Rüzgar+Y	Rüzgar-Y
N	-32.62	-35.51	-80.88	-77.46	-4.78	-5.26	-13.82	-13.15
Alt Mx	0.80	1.44	0.28	-0.48	0.13	0.24	0.05	-0.10
Alt My	0.30	-0.05	1.56	1.97	0.05	0.00	0.32	0.40

S107	GGGGGG	QQQQQQ	Q_Q_Q_	_Q_Q_Q	QQ_QQ_	_QQ_QQ	Q_QQ_Q	Zemin
N	162.69	8.41	(azaltma	Nq=	13.97x0.602 =	8.41)		0.00
Alt Mx	0.80	0.00	0.00	0.00	0.00	0.00	0.00	0.00
Alt My	-0.81	0.00	0.00	0.00	0.00	0.00	0.00	0.00
	Deprem+X	Deprem-X	Deprem+Y	Deprem-Y	Rüzgar+X	Rüzgar-X	Rüzgar+Y	Rüzgar-Y
N	0.00	0.00	-69.81	-69.81	0.00	0.00	-11.55	-11.55
Alt Mx	0.82	1.47	0.39	-0.39	0.14	0.25	0.08	-0.08
Alt My	0.00	0.00	1.61	1.61	0.00	0.00	0.33	0.33

S108	GGGGGG	QQQQQQ	Q_Q_Q_	_Q_Q_Q	QQ_QQ_	_QQ_QQ	Q_QQ_Q	Zemin
N	163.87	8.45	(azaltma	Nq=	14.01x0.603 =	8.45)		0.00
Alt Mx	-0.02	0.00	0.00	0.00	0.00	0.00	0.00	0.00
Alt My	0.00	0.00	0.00	0.00	0.00	0.00	0.00	0.00
	Deprem+X	Deprem-X	Deprem+Y	Deprem-Y	Rüzgar+X	Rüzgar-X	Rüzgar+Y	Rüzgar-Y
N	32.62	35.50	-77.46	-80.88	4.78	5.26	-13.15	-13.82
Alt Mx	0.80	1.44	0.48	-0.28	0.13	0.24	0.10	-0.05
Alt My	-0.30	0.05	1.97	1.56	-0.05	0.00	0.40	0.32

S109	GGGGGG	QQQQQQ	Q_Q_Q_	_Q_Q_Q	QQ_QQ_	_QQ_QQ	Q_QQ_Q	Zemin
N	442.25	23.39	(azaltma	Nq=	38.47x0.608 =	23.39)		0.00
Alt Mx	0.08	0.00	0.01	-0.01	-0.01	0.01	0.01	0.00
Alt My	-4.71	-0.62	-0.86	0.23	0.15	-0.84	-0.58	0.00
	Deprem+X	Deprem-X	Deprem+Y	Deprem-Y	Rüzgar+X	Rüzgar-X	Rüzgar+Y	Rüzgar-Y
N	-279.88	-322.45	-150.25	-99.82	-40.50	-47.46	-25.17	-15.34
Alt Mx	5.09	7.39	1.38	-1.36	0.85	1.24	0.28	-0.27
Alt My	6.19	-0.44	6.51	14.37	1.14	0.02	1.32	2.90

S110	GGGGGG	QQQQQQ	Q_Q_Q_	_Q_Q_Q	QQ_QQ_	_QQ_QQ	Q_QQ_Q	Zemin
N	172.78	9.36	(azaltma	Nq=	15.18x0.616 =	9.36)		0.00
Alt Mx	-0.01	0.00	0.00	-0.01	-0.01	0.00	0.00	0.00
Alt My	0.69	0.06	0.06	0.00	0.00	0.06	0.05	0.00
	Deprem+X	Deprem-X	Deprem+Y	Deprem-Y	Rüzgar+X	Rüzgar-X	Rüzgar+Y	Rüzgar-Y
N	-74.34	-82.46	-54.28	-44.66	-10.49	-11.81	-8.96	-7.11
Alt Mx	0.57	1.41	0.28	-0.24	0.16	0.24	0.08	-0.05
Alt My	1.18	0.05	1.69	3.04	0.22	0.02	0.35	0.62

STAA-CAD V11

FİRMA : 03-23-2005

PROJE : perdeli sistem (perdeli.ST4)

TEMELLERE GELEN KOLON YÜKLERİ

S111	GGGGGG	QQQQQQ	Q_Q_Q	_Q_Q_Q	QQ_QQ	_QQ_QQ	Q_QQ_Q	Zemin
N	164.76	8.57	(Asaltma	Nq=	14.17x0.605 =	8.57)		0.00
Alt Mx	0.00	0.01	0.00	0.01	0.01	0.00	0.01	0.00
Alt My	0.00	0.00	0.00	0.00	0.00	0.00	0.00	0.00
	Deprem+X	Deprem-X	Deprem+Y	Deprem-Y	Rüzgar+X	Rüzgar-X	Rüzgar+Y	Rüzgar-Y
N	-29.92	-30.67	-60.76	-59.86	-4.33	-4.45	-10.31	-10.14
Alt Mx	1.15	1.66	0.40	-0.20	0.19	0.28	0.08	-0.04
Alt My	0.34	-0.05	1.60	2.14	0.06	0.00	0.34	0.43

S112	GGGGGG	QQQQQQ	Q_Q_Q	_Q_Q_Q	QQ_QQ	_QQ_QQ	Q_QQ_Q	Zemin
N	164.75	8.57	(Asaltma	Nq=	14.16x0.605 =	8.57)		0.00
Alt Mx	-0.00	-0.01	-0.01	0.00	0.00	-0.01	-0.01	0.00
Alt My	0.00	0.00	0.00	0.00	0.00	0.00	0.00	0.00
	Deprem+X	Deprem-X	Deprem+Y	Deprem-Y	Rüzgar+X	Rüzgar-X	Rüzgar+Y	Rüzgar-Y
N	29.91	30.67	-59.86	-60.76	4.33	4.44	-10.14	-10.31
Alt Mx	1.15	1.66	0.20	-0.40	0.19	0.28	0.04	-0.08
Alt My	-0.34	0.05	2.14	1.68	-0.06	0.00	0.42	0.34

S113	GGGGGG	QQQQQQ	Q_Q_Q	_Q_Q_Q	QQ_QQ	_QQ_QQ	Q_QQ_Q	Zemin
N	172.78	9.26	(Asaltma	Nq=	15.19x0.616 =	9.26)		0.00
Alt Mx	0.01	0.00	0.01	0.00	0.00	0.01	0.00	0.00
Alt My	0.69	0.05	0.05	0.01	0.01	0.06	0.05	0.00
	Deprem+X	Deprem-X	Deprem+Y	Deprem-Y	Rüzgar+X	Rüzgar-X	Rüzgar+Y	Rüzgar-Y
N	74.23	82.46	-44.66	-54.28	10.49	11.81	-7.11	-8.96
Alt Mx	0.97	1.41	0.24	-0.28	0.16	0.24	0.05	-0.06
Alt My	-1.18	-0.05	3.04	1.69	-0.22	-0.02	0.62	0.25

S114	GGGGGG	QQQQQQ	Q_Q_Q	_Q_Q_Q	QQ_QQ	_QQ_QQ	Q_QQ_Q	Zemin
N	442.24	23.38	(Asaltma	Nq=	38.45x0.608 =	23.38)		0.00
Alt Mx	-0.08	0.00	-0.01	0.00	0.00	-0.01	0.00	0.00
Alt My	-4.70	-0.62	-0.85	0.22	0.15	-0.84	-0.57	0.00
	Deprem+X	Deprem-X	Deprem+Y	Deprem-Y	Rüzgar+X	Rüzgar-X	Rüzgar+Y	Rüzgar-Y
N	279.88	322.44	-99.82	-150.24	40.50	47.46	-15.24	-25.17
Alt Mx	5.09	7.39	1.36	-1.38	0.85	1.24	0.27	-0.28
Alt My	-6.18	0.44	14.27	6.51	-1.14	-0.02	2.90	1.32

S115	GGGGGG	QQQQQQ	Q_Q_Q	_Q_Q_Q	QQ_QQ	_QQ_QQ	Q_QQ_Q	Zemin
N	122.37	4.91	(Asaltma	Nq=	8.08x0.607 =	4.91)		0.00
Alt Mx	0.01	0.00	0.00	0.00	0.00	0.00	0.00	0.00
Alt My	0.00	0.00	0.00	0.00	0.00	0.00	0.00	0.00
	Deprem+X	Deprem-X	Deprem+Y	Deprem-Y	Rüzgar+X	Rüzgar-X	Rüzgar+Y	Rüzgar-Y
N	-32.26	-36.23	-26.11	-21.41	-5.12	-5.78	-5.04	-4.11
Alt Mx	0.85	1.20	0.13	-0.29	0.14	0.20	0.03	-0.06
Alt My	0.15	-0.02	1.27	1.46	0.03	0.00	0.26	0.30

S116	GGGGGG	QQQQQQ	Q_Q_Q	_Q_Q_Q	QQ_QQ	_QQ_QQ	Q_QQ_Q	Zemin
N	122.37	4.90	(Asaltma	Nq=	8.08x0.607 =	4.90)		0.00
Alt Mx	-0.01	0.00	0.00	0.00	0.00	0.00	0.00	0.00
Alt My	0.00	0.00	0.00	0.00	0.00	0.00	0.00	0.00
	Deprem+X	Deprem-X	Deprem+Y	Deprem-Y	Rüzgar+X	Rüzgar-X	Rüzgar+Y	Rüzgar-Y
N	32.26	36.23	-21.41	-26.11	5.12	5.78	-4.11	-5.04
Alt Mx	0.85	1.20	0.29	-0.13	0.14	0.20	0.06	-0.03
Alt My	-0.15	0.02	1.46	1.27	-0.03	0.00	0.30	0.26

S117	GGGGGG	QQQQQQ	Q_Q_Q	_Q_Q_Q	QQ_QQ	_QQ_QQ	Q_QQ_Q	Zemin
N	122.10	4.86	(Asaltma	Nq=	8.09x0.601 =	4.86)		0.00
Alt Mx	0.01	0.00	0.00	0.00	0.00	0.00	0.00	0.00
Alt My	0.00	0.00	0.00	0.00	0.00	0.00	0.00	0.00
	Deprem+X	Deprem-X	Deprem+Y	Deprem-Y	Rüzgar+X	Rüzgar-X	Rüzgar+Y	Rüzgar-Y
N	-20.20	-36.37	20.10	27.42	-4.73	-5.75	3.85	5.30
Alt Mx	1.05	1.19	0.16	0.00	0.18	0.20	0.02	0.00
Alt My	0.16	0.00	1.27	1.46	0.03	0.00	0.26	0.30

S118	GGGGGG	QQQQQQ	Q_Q_Q	_Q_Q_Q	QQ_QQ	_QQ_QQ	Q_QQ_Q	Zemin
N	122.10	4.86	(Asaltma	Nq=	8.08x0.601 =	4.86)		0.00
Alt Mx	-0.01	0.00	0.00	0.00	0.00	0.00	0.00	0.00
Alt My	0.00	0.00	0.00	0.00	0.00	0.00	0.00	0.00
	Deprem+X	Deprem-X	Deprem+Y	Deprem-Y	Rüzgar+X	Rüzgar-X	Rüzgar+Y	Rüzgar-Y
N	20.20	36.37	27.42	20.10	4.73	5.75	5.30	3.85
Alt Mx	1.05	1.19	0.00	-0.16	0.15	0.20	0.00	-0.03
Alt My	-0.16	0.00	1.46	1.27	-0.03	0.00	0.30	0.26

S119	GGGGGG	QQQQQQ	Q_Q_Q	_Q_Q_Q	QQ_QQ	_QQ_QQ	Q_QQ_Q	Zemin
N	165.18	8.51	(Asaltma	Nq=	14.18x0.600 =	8.51)		0.00
Alt Mx	0.03	0.00	0.00	0.00	0.00	0.00	0.00	0.00
Alt My	0.01	0.00	0.00	0.00	0.00	0.00	0.00	0.00
	Deprem+X	Deprem-X	Deprem+Y	Deprem-Y	Rüzgar+X	Rüzgar-X	Rüzgar+Y	Rüzgar-Y
N	-37.54	-37.00	-10.17	-10.81	-5.67	-5.58	-1.74	-1.87
Alt Mx	1.23	1.33	0.12	0.13	0.23	0.23	0.02	0.03
Alt My	0.36	-0.02	1.72	2.17	0.07	0.00	0.35	0.44

S120	GGGGGG	QQQQQQ	Q_Q_Q	_Q_Q_Q	QQ_QQ	_QQ_QQ	Q_QQ_Q	Zemin
N	163.49	8.31	(Asaltma	Nq=	13.85x0.600 =	8.31)		0.00
Alt Mx	0.01	0.00	0.00	0.00	0.00	0.00	0.00	0.00
Alt My	-0.01	0.00	0.00	0.00	0.00	0.00	0.00	0.00
	Deprem+X	Deprem-X	Deprem+Y	Deprem-Y	Rüzgar+X	Rüzgar-X	Rüzgar+Y	Rüzgar-Y
N	-11.92	-11.46	-20.61	-21.16	-1.79	-1.71	-3.90	-4.00
Alt Mx	1.36	1.36	0.06	0.06	0.24	0.24	0.01	0.01
Alt My	0.07	-0.04	1.56	1.68	0.01	0.00	0.32	0.34

STAAD V11

FİRMA : 03-23-2005

PROJE : perdeli sistem (perdeli.STA)

TEMELLERE GELEN KOLON YÜKLERİ

S121	GGGGGG	QQQQQQ	Q Q Q	Q Q Q	QQ QQ	QQ QQ	Q QQ Q	Zemin
N	163.48	8.31	(azaltma	Nq=	13.65x0.600 =	8.31)		0.00
Alt Mx	-0.01	0.00	0.00	0.00	0.00	0.00	0.00	0.00
Alt My	-0.01	0.00	0.00	0.00	0.00	0.00	0.00	0.00
	Deprem+X	Deprem-X	Deprem+Y	Deprem-Y	Rüzgar+X	Rüzgar-X	Rüzgar+Y	Rüzgar-Y
N	11.92	11.45	-21.16	-20.61	1.79	1.71	-4.01	-3.90
Alt Mx	1.36	1.36	-0.06	-0.06	0.24	0.24	-0.01	-0.01
Alt My	-0.07	0.04	1.68	1.56	-0.01	0.00	0.34	0.32

S122	GGGGGG	QQQQQQ	Q Q Q	Q Q Q	QQ QQ	QQ QQ	Q QQ Q	Zemin
N	165.17	8.50	(azaltma	Nq=	14.17x0.600 =	8.50)		0.00
Alt Mx	-0.03	0.00	0.00	0.00	0.00	0.00	0.00	0.00
Alt My	0.01	0.00	0.00	0.00	0.00	0.00	0.00	0.00
	Deprem+X	Deprem-X	Deprem+Y	Deprem-Y	Rüzgar+X	Rüzgar-X	Rüzgar+Y	Rüzgar-Y
N	37.54	37.00	-10.81	-10.17	5.67	5.58	-1.87	-1.74
Alt Mx	1.33	1.33	-0.13	-0.12	0.23	0.23	-0.02	-0.02
Alt My	-0.26	0.02	2.17	1.72	-0.07	0.00	0.44	0.35

S123	GGGGGG	QQQQQQ	Q Q Q	Q Q Q	QQ QQ	QQ QQ	Q QQ Q	Zemin
N	472.38	26.75	(azaltma	Nq=	42.33x0.632 =	26.75)		0.00
Alt Mx	0.32	0.02	-0.03	0.04	0.06	-0.02	0.00	0.00
Alt My	3.06	0.44	0.71	-0.27	-0.19	0.70	0.38	0.00
	Deprem+X	Deprem-X	Deprem+Y	Deprem-Y	Rüzgar+X	Rüzgar-X	Rüzgar+Y	Rüzgar-Y
N	-352.18	-316.34	40.18	-2.26	-53.42	-47.55	6.46	-1.82
Alt Mx	9.25	7.89	-0.52	0.79	1.61	1.38	-0.16	0.16
Alt My	7.29	-0.47	7.14	16.35	1.34	0.03	1.46	3.20

S124	GGGGGG	QQQQQQ	Q Q Q	Q Q Q	QQ QQ	QQ QQ	Q QQ Q	Zemin
N	171.06	9.21	(azaltma	Nq=	15.05x0.612 =	9.21)		0.00
Alt Mx	0.06	0.01	0.01	0.00	0.00	0.01	0.01	0.00
Alt My	0.02	0.00	0.00	0.00	0.00	0.00	0.00	0.00
	Deprem+X	Deprem-X	Deprem+Y	Deprem-Y	Rüzgar+X	Rüzgar-X	Rüzgar+Y	Rüzgar-Y
N	-53.55	-48.81	12.39	6.76	-7.90	-7.12	1.89	0.78
Alt Mx	1.72	1.48	-0.26	0.02	0.30	0.26	-0.05	0.00
Alt My	0.30	-0.22	1.64	2.26	0.06	-0.03	0.34	0.46

S125	GGGGGG	QQQQQQ	Q Q Q	Q Q Q	QQ QQ	QQ QQ	Q QQ Q	Zemin
N	166.66	8.61	(azaltma	Nq=	14.35x0.600 =	8.61)		0.00
Alt Mx	0.03	0.00	0.00	0.00	0.00	0.00	0.00	0.00
Alt My	-0.01	0.00	0.00	0.00	0.00	0.00	0.00	0.00
	Deprem+X	Deprem-X	Deprem+Y	Deprem-Y	Rüzgar+X	Rüzgar-X	Rüzgar+Y	Rüzgar-Y
N	-31.01	-31.04	26.08	26.11	-4.53	-4.53	4.73	4.74
Alt Mx	1.63	1.39	-0.28	0.00	0.28	0.24	-0.06	0.00
Alt My	0.26	-0.09	1.56	1.97	0.05	-0.01	0.32	0.40

S126	GGGGGG	QQQQQQ	Q Q Q	Q Q Q	QQ QQ	QQ QQ	Q QQ Q	Zemin
N	165.81	8.48	(azaltma	Nq=	14.14x0.600 =	8.48)		0.00
Alt Mx	0.00	0.00	0.00	0.00	0.00	0.00	0.00	0.00
Alt My	-0.02	0.00	0.00	0.00	0.00	0.00	0.00	0.00
	Deprem+X	Deprem-X	Deprem+Y	Deprem-Y	Rüzgar+X	Rüzgar-X	Rüzgar+Y	Rüzgar-Y
N	-7.74	-8.83	31.50	32.80	-1.05	-1.23	5.85	6.11
Alt Mx	1.62	1.35	-0.18	0.14	0.28	0.24	-0.04	0.03
Alt My	0.07	-0.03	1.55	1.67	0.01	0.00	0.32	0.34

S127	GGGGGG	QQQQQQ	Q Q Q	Q Q Q	QQ QQ	QQ QQ	Q QQ Q	Zemin
N	166.57	8.53	(azaltma	Nq=	14.22x0.600 =	8.53)		0.00
Alt Mx	0.00	0.00	0.00	0.00	0.00	0.00	0.00	0.00
Alt My	-0.28	-0.04	-0.04	0.00	-0.01	-0.04	-0.04	0.00
	Deprem+X	Deprem-X	Deprem+Y	Deprem-Y	Rüzgar+X	Rüzgar-X	Rüzgar+Y	Rüzgar-Y
N	0.00	0.00	30.45	30.45	0.00	0.00	5.63	5.63
Alt Mx	1.62	1.35	-0.16	0.16	0.28	0.24	-0.03	0.03
Alt My	0.00	0.00	2.25	2.25	0.00	0.00	0.46	0.46

S128	GGGGGG	QQQQQQ	Q Q Q	Q Q Q	QQ QQ	QQ QQ	Q QQ Q	Zemin
N	165.80	8.48	(azaltma	Nq=	14.14x0.600 =	8.48)		0.00
Alt Mx	0.00	0.00	0.00	0.00	0.00	0.00	0.00	0.00
Alt My	-0.02	0.00	0.00	0.00	0.00	0.00	0.00	0.00
	Deprem+X	Deprem-X	Deprem+Y	Deprem-Y	Rüzgar+X	Rüzgar-X	Rüzgar+Y	Rüzgar-Y
N	7.78	8.82	32.80	31.50	1.04	1.23	6.11	5.85
Alt Mx	1.62	1.35	-0.14	0.18	0.28	0.24	-0.03	0.04
Alt My	-0.07	0.03	1.67	1.55	-0.01	0.00	0.34	0.32

S129	GGGGGG	QQQQQQ	Q Q Q	Q Q Q	QQ QQ	QQ QQ	Q QQ Q	Zemin
N	166.66	8.61	(azaltma	Nq=	14.35x0.600 =	8.61)		0.00
Alt Mx	-0.03	0.00	0.00	0.00	0.00	0.00	0.00	0.00
Alt My	-0.01	0.00	0.00	0.00	0.00	0.00	0.00	0.00
	Deprem+X	Deprem-X	Deprem+Y	Deprem-Y	Rüzgar+X	Rüzgar-X	Rüzgar+Y	Rüzgar-Y
N	31.01	31.03	26.11	26.08	4.53	4.53	4.74	4.73
Alt Mx	1.63	1.39	0.00	0.28	0.28	0.24	0.00	0.06
Alt My	-0.26	0.09	1.97	1.56	-0.05	0.01	0.40	0.32

S130	GGGGGG	QQQQQQ	Q Q Q	Q Q Q	QQ QQ	QQ QQ	Q QQ Q	Zemin
N	171.05	9.21	(azaltma	Nq=	15.05x0.612 =	9.21)		0.00
Alt Mx	-0.08	-0.01	0.00	-0.01	-0.01	0.00	-0.01	0.00
Alt My	0.02	0.00	0.00	0.01	0.01	0.00	0.00	0.00
	Deprem+X	Deprem-X	Deprem+Y	Deprem-Y	Rüzgar+X	Rüzgar-X	Rüzgar+Y	Rüzgar-Y
N	53.55	48.80	6.75	12.38	7.90	7.12	0.78	1.89
Alt Mx	1.72	1.48	-0.02	0.26	0.30	0.26	0.00	0.05
Alt My	-0.30	0.22	2.26	1.64	-0.06	0.03	0.46	0.34

STAAD V11

FİRMA : | 03-23-2005

PROJE : perdeli sistem (perdeli.ST4)

TEMELLERE GELEN KOLON YÜKLERİ

S131	GGGGGG	QQQQQQ	Q_Q_Q_	_Q_Q_Q	QQ_QQ_	_QQ_QQ	Q_QQ_Q	Zemin
N	472.21	26.75	(azaltma	Nq=	42.32x0.632 =	26.75)		0.00
Alt Mx	-0.32	-0.02	-0.06	0.04	0.02	-0.06	0.01	0.00
Alt My	3.07	0.44	0.71	-0.27	-0.19	0.70	0.38	0.00
	Deprem+X	Deprem-X	Deprem+Y	Deprem-Y	Rüzgar+X	Rüzgar-X	Rüzgar+Y	Rüzgar-Y
N	352.16	216.32	-2.29	48.15	53.42	47.54	-1.82	6.46
Alt Mx	9.25	7.89	-0.79	0.21	1.61	1.38	-0.16	0.16
Alt My	-7.29	0.47	16.26	7.14	-1.34	-0.03	3.30	1.46

S132	GGGGGG	QQQQQQ	Q_Q_Q_	_Q_Q_Q	QQ_QQ_	_QQ_QQ	Q_QQ_Q	Zemin
N	435.60	22.28	(azaltma	Nq=	37.12x0.600 =	22.28)		0.00
Alt Mx	-0.03	-0.01	-0.01	0.00	0.00	-0.01	-0.01	0.00
Alt My	0.94	0.09	-0.11	0.21	0.15	-0.09	0.13	0.00
	Deprem+X	Deprem-X	Deprem+Y	Deprem-Y	Rüzgar+X	Rüzgar-X	Rüzgar+Y	Rüzgar-Y
N	-368.82	-216.79	175.86	114.11	-56.57	-47.95	30.18	18.09
Alt Mx	10.24	6.35	-1.95	1.96	1.80	1.25	-0.39	0.39
Alt My	6.50	-0.42	6.63	14.85	1.19	0.03	1.35	3.00

S133	GGGGGG	QQQQQQ	Q_Q_Q_	_Q_Q_Q	QQ_QQ_	_QQ_QQ	Q_QQ_Q	Zemin
N	171.25	8.88	(azaltma	Nq=	14.80x0.600 =	8.88)		0.00
Alt Mx	-0.01	0.00	0.00	0.00	0.00	0.00	0.00	0.00
Alt My	-0.57	-0.05	-0.05	0.00	0.00	-0.05	-0.05	0.00
	Deprem+X	Deprem-X	Deprem+Y	Deprem-Y	Rüzgar+X	Rüzgar-X	Rüzgar+Y	Rüzgar-Y
N	-83.93	-77.87	60.77	53.60	-12.26	-11.26	10.23	8.82
Alt Mx	1.86	1.26	-0.28	0.23	0.33	0.23	-0.08	0.07
Alt My	0.97	-0.17	1.67	2.02	0.18	-0.01	0.34	0.61

S134	GGGGGG	QQQQQQ	Q_Q_Q_	_Q_Q_Q	QQ_QQ_	_QQ_QQ	Q_QQ_Q	Zemin
N	172.50	9.21	(azaltma	Nq=	15.17x0.607 =	9.21)		0.00
Alt Mx	-0.02	0.00	0.00	0.00	0.00	0.00	0.00	0.00
Alt My	-0.01	0.00	0.00	0.00	0.00	0.00	0.00	0.00
	Deprem+X	Deprem-X	Deprem+Y	Deprem-Y	Rüzgar+X	Rüzgar-X	Rüzgar+Y	Rüzgar-Y
N	-19.45	-28.77	56.54	67.58	-1.91	-3.45	9.44	11.61
Alt Mx	1.92	1.31	-0.41	0.31	0.34	0.24	-0.08	0.06
Alt My	0.44	-0.11	1.57	2.22	0.08	-0.01	0.32	0.45

S135	GGGGGG	QQQQQQ	Q_Q_Q_	_Q_Q_Q	QQ_QQ_	_QQ_QQ	Q_QQ_Q	Zemin
N	172.49	9.20	(azaltma	Nq=	15.16x0.607 =	9.20)		0.00
Alt Mx	0.02	0.00	0.00	0.00	0.00	0.00	0.00	0.00
Alt My	-0.01	0.00	0.00	0.00	0.00	0.00	0.00	0.00
	Deprem+X	Deprem-X	Deprem+Y	Deprem-Y	Rüzgar+X	Rüzgar-X	Rüzgar+Y	Rüzgar-Y
N	19.44	28.76	67.58	56.54	1.90	3.44	11.61	9.44
Alt Mx	1.92	1.31	-0.21	0.41	0.34	0.24	-0.06	0.08
Alt My	-0.44	0.11	2.22	1.57	-0.08	0.01	0.45	0.32

S136	GGGGGG	QQQQQQ	Q_Q_Q_	_Q_Q_Q	QQ_QQ_	_QQ_QQ	Q_QQ_Q	Zemin
N	171.24	8.88	(azaltma	Nq=	14.79x0.600 =	8.88)		0.00
Alt Mx	0.01	0.00	0.00	0.00	0.00	0.00	0.00	0.00
Alt My	-0.57	-0.05	-0.05	0.00	0.00	-0.05	-0.04	0.00
	Deprem+X	Deprem-X	Deprem+Y	Deprem-Y	Rüzgar+X	Rüzgar-X	Rüzgar+Y	Rüzgar-Y
N	83.92	77.86	53.59	60.76	12.26	11.26	8.82	10.23
Alt Mx	1.86	1.26	-0.33	0.37	0.32	0.23	-0.07	0.08
Alt My	-0.97	0.17	3.02	1.67	-0.18	0.01	0.61	0.34

S137	GGGGGG	QQQQQQ	Q_Q_Q_	_Q_Q_Q	QQ_QQ_	_QQ_QQ	Q_QQ_Q	Zemin
N	435.54	22.27	(azaltma	Nq=	37.12x0.600 =	22.27)		0.00
Alt Mx	0.03	0.01	0.01	0.00	0.00	0.01	0.01	0.00
Alt My	0.95	0.09	-0.12	0.21	0.15	-0.10	0.13	0.00
	Deprem+X	Deprem-X	Deprem+Y	Deprem-Y	Rüzgar+X	Rüzgar-X	Rüzgar+Y	Rüzgar-Y
N	368.80	216.68	114.07	175.81	56.56	47.94	18.02	30.17
Alt Mx	10.24	6.35	-1.96	1.95	1.80	1.25	-0.39	0.39
Alt My	-6.50	0.42	14.86	6.63	-1.19	-0.03	3.00	1.35

S138	GGGGGG	QQQQQQ	Q_Q_Q_	_Q_Q_Q	QQ_QQ_	_QQ_QQ	Q_QQ_Q	Zemin
N	484.44	24.24	(azaltma	Nq=	40.20x0.603 =	24.24)		0.00
Alt Mx	-0.93	-0.18	-0.13	0.03	0.02	-0.13	-0.10	0.00
Alt My	0.90	0.10	0.13	-0.03	-0.03	0.13	0.09	0.00
	Deprem+X	Deprem-X	Deprem+Y	Deprem-Y	Rüzgar+X	Rüzgar-X	Rüzgar+Y	Rüzgar-Y
N	-162.29	-168.48	247.21	254.46	-22.30	-23.28	41.47	42.84
Alt Mx	13.20	7.88	-3.66	2.89	2.33	1.40	-0.73	0.58
Alt My	4.63	-0.48	7.66	13.72	0.65	-0.01	1.56	2.77

S139	GGGGGG	QQQQQQ	Q_Q_Q_	_Q_Q_Q	QQ_QQ_	_QQ_QQ	Q_QQ_Q	Zemin
N	175.78	9.27	(azaltma	Nq=	15.28x0.603 =	9.27)		0.00
Alt Mx	0.54	0.04	0.05	-0.01	0.00	0.05	0.04	0.00
Alt My	-0.02	0.00	0.00	0.00	0.00	0.00	0.00	0.00
	Deprem+X	Deprem-X	Deprem+Y	Deprem-Y	Rüzgar+X	Rüzgar-X	Rüzgar+Y	Rüzgar-Y
N	-7.87	-28.31	116.40	140.61	0.14	-3.23	20.35	25.10
Alt Mx	2.83	1.64	-0.96	0.44	0.50	0.30	-0.19	0.09
Alt My	0.46	-0.02	1.30	1.88	0.05	0.00	0.27	0.38

S140	GGGGGG	QQQQQQ	Q_Q_Q_	_Q_Q_Q	QQ_QQ_	_QQ_QQ	Q_QQ_Q	Zemin
N	175.77	9.27	(azaltma	Nq=	15.27x0.603 =	9.27)		0.00
Alt Mx	-0.54	-0.04	-0.05	0.01	0.01	-0.05	-0.04	0.00
Alt My	-0.02	0.00	0.00	0.00	0.00	0.00	0.00	0.00
	Deprem+X	Deprem-X	Deprem+Y	Deprem-Y	Rüzgar+X	Rüzgar-X	Rüzgar+Y	Rüzgar-Y
N	7.86	28.30	140.62	116.40	-0.14	3.23	25.10	20.35
Alt Mx	2.83	1.64	-0.44	0.96	0.50	0.30	-0.09	0.19
Alt My	-0.46	0.02	1.88	1.30	-0.08	0.00	0.38	0.27

STAA-CAD V11

FİRMA :								03-23-2005
PROJE : perdeli sistem								(perdeli.ST4)

TEMELLERE GELEN KOLON YÜKLERİ

S141	GGGGGG	QQQQQQ	Q Q Q	Q Q Q	QQ QQ	QQ QQ	Q QQ Q	Zemin
N	484.26	24.23	(azaltma	Nq=	40.18x0.602 =	24.23)		0.00
Alt Mx	0.93	0.10	0.13	-0.03	-0.02	0.13	0.09	0.00
Alt My	0.90	0.10	0.13	-0.04	-0.03	0.13	0.09	0.00
	Deprem+X	Deprem-X	Deprem+Y	Deprem-Y	Rüzgar+X	Rüzgar-X	Rüzgar+Y	Rüzgar-Y
N	162.26	168.38	254.45	247.20	22.30	23.27	42.84	41.46
Alt Mx	13.20	7.68	-2.89	3.66	2.33	1.40	-0.58	0.73
Alt My	-4.53	0.48	13.72	7.66	-0.85	0.01	2.77	1.56
S142	GGGGGG	QQQQQQ	Q Q Q	Q Q Q	QQ QQ	QQ QQ	Q QQ Q	Zemin
N	452.56	23.73	(azaltma	Nq=	39.49x0.601 =	23.73)		0.00
Alt Mx	-2.56	-0.32	-0.46	0.14	0.08	-0.45	-0.28	0.00
Alt My	-0.07	0.00	-0.01	0.01	0.01	-0.01	0.00	0.00
	Deprem+X	Deprem-X	Deprem+Y	Deprem-Y	Rüzgar+X	Rüzgar-X	Rüzgar+Y	Rüzgar-Y
N	-12.91	-74.05	243.31	414.54	1.47	-8.44	69.45	74.43
Alt Mx	14.00	7.70	-3.66	3.82	2.47	1.41	-0.73	0.76
Alt My	2.71	-0.14	7.75	11.13	0.50	0.02	1.58	2.26
S143	GGGGGG	QQQQQQ	Q Q Q	Q Q Q	QQ QQ	QQ QQ	Q QQ Q	Zemin
N	514.81	30.65	(azaltma	Nq=	47.75x0.642 =	30.65)		0.00
Alt Mx	0.00	0.00	0.44	-0.44	-0.32	0.41	-0.09	0.00
Alt My	0.09	0.05	0.13	-0.08	-0.10	0.11	0.09	0.00
	Deprem+X	Deprem-X	Deprem+Y	Deprem-Y	Rüzgar+X	Rüzgar-X	Rüzgar+Y	Rüzgar-Y
N	-0.01	-0.01	355.89	355.29	0.00	0.00	62.64	62.64
Alt Mx	15.86	8.61	-4.30	4.30	2.81	1.59	-0.86	0.86
Alt My	0.00	0.00	10.86	10.56	0.00	0.00	2.21	2.21
S144	GGGGGG	QQQQQQ	Q Q Q	Q Q Q	QQ QQ	QQ QQ	Q QQ Q	Zemin
N	452.54	23.73	(azaltma	Nq=	39.48x0.601 =	23.73)		0.00
Alt Mx	2.65	0.32	-0.13	0.46	0.32	-0.10	0.42	0.00
Alt My	-0.07	0.09	0.00	0.00	0.00	0.00	0.08	0.00
	Deprem+X	Deprem-X	Deprem+Y	Deprem-Y	Rüzgar+X	Rüzgar-X	Rüzgar+Y	Rüzgar-Y
N	13.88	74.02	414.56	243.33	-1.47	8.44	74.43	60.46
Alt Mx	14.00	7.70	-3.82	3.65	2.47	1.41	-0.76	0.73
Alt My	-2.71	0.14	11.13	7.76	-0.50	-0.02	2.26	1.58
P107-Sol	GGGGGG	QQQQQQ	Q Q Q	Q Q Q	QQ QQ	QQ QQ	Q QQ Q	Zemin
N	598.24	51.29	(azaltma	Nq=	51.29x1.000 =	51.29)		0.00
Alt Mx	-0.63	-0.03	-0.01	-0.01	0.00	-0.05	0.01	0.00
Alt My	0.00	0.00	0.00	0.00	0.00	0.00	0.00	0.00
(S106)	Deprem+X	Deprem-X	Deprem+Y	Deprem-Y	Rüzgar+X	Rüzgar-X	Rüzgar+Y	Rüzgar-Y
N	58.65	62.77	274.67	269.78	8.56	9.23	46.09	45.14
Alt Mx	125.01	189.22	43.11	-33.09	19.69	30.46	8.62	-6.56
Alt My	0.33	-0.02	3.92	4.35	0.06	0.00	0.79	0.88
P107-Sag	GGGGGG	QQQQQQ	Q Q Q	Q Q Q	QQ QQ	QQ QQ	Q QQ Q	Zemin
N	598.24	51.29	(azaltma	Nq=	51.29x1.000 =	51.29)		0.00
Alt Mx	-0.63	-0.03	-0.01	-0.01	0.00	-0.05	0.01	0.00
Alt My	0.00	0.00	0.00	0.00	0.00	0.00	0.00	0.00
(S107)	Deprem+X	Deprem-X	Deprem+Y	Deprem-Y	Rüzgar+X	Rüzgar-X	Rüzgar+Y	Rüzgar-Y
N	58.65	62.77	274.67	269.78	8.56	9.23	46.09	45.14
Alt Mx	125.01	189.22	43.11	-33.09	19.69	30.46	8.62	-6.56
Alt My	0.33	-0.02	3.92	4.35	0.06	0.00	0.79	0.88
P108-Sol	GGGGGG	QQQQQQ	Q Q Q	Q Q Q	QQ QQ	QQ QQ	Q QQ Q	Zemin
N	598.22	51.29	(azaltma	Nq=	51.29x1.000 =	51.29)		0.00
Alt Mx	0.64	0.02	0.01	0.01	0.03	0.00	0.01	0.00
Alt My	0.00	0.00	0.00	0.00	0.00	0.00	0.00	0.00
(S108)	Deprem+X	Deprem-X	Deprem+Y	Deprem-Y	Rüzgar+X	Rüzgar-X	Rüzgar+Y	Rüzgar-Y
N	58.64	62.76	269.78	274.67	8.56	9.23	45.14	46.09
Alt Mx	125.01	189.22	33.12	-43.08	19.69	30.46	6.56	-8.62
Alt My	-0.33	0.02	4.35	3.93	-0.06	0.00	0.88	0.79
P108-Sag	GGGGGG	QQQQQQ	Q Q Q	Q Q Q	QQ QQ	QQ QQ	Q QQ Q	Zemin
N	598.22	51.29	(azaltma	Nq=	51.29x1.000 =	51.29)		0.00
Alt Mx	0.64	0.02	0.01	0.01	0.03	0.00	0.01	0.00
Alt My	0.00	0.00	0.00	0.00	0.00	0.00	0.00	0.00
(S108)	Deprem+X	Deprem-X	Deprem+Y	Deprem-Y	Rüzgar+X	Rüzgar-X	Rüzgar+Y	Rüzgar-Y
N	58.64	62.76	269.78	274.67	8.56	9.23	45.14	46.09
Alt Mx	125.01	189.22	33.12	-43.08	19.69	30.46	6.56	-8.62
Alt My	-0.33	0.02	4.35	3.93	-0.06	0.00	0.88	0.79
P109-Sol	GGGGGG	QQQQQQ	Q Q Q	Q Q Q	QQ QQ	QQ QQ	Q QQ Q	Zemin
N	487.45	42.54	(azaltma	Nq=	42.54x1.000 =	42.54)		0.00
Alt Mx	-0.07	0.05	-0.06	0.10	0.12	-0.08	0.05	0.00
Alt My	0.00	0.00	0.00	0.00	0.00	0.00	0.00	0.00
(S109)	Deprem+X	Deprem-X	Deprem+Y	Deprem-Y	Rüzgar+X	Rüzgar-X	Rüzgar+Y	Rüzgar-Y
N	255.70	288.29	158.64	120.04	36.46	41.75	26.31	18.84
Alt Mx	105.56	144.32	22.73	-23.28	17.03	23.53	4.53	-4.64
Alt My	1.59	-0.12	2.17	4.20	0.29	0.00	0.44	0.85
P109-Sag	GGGGGG	QQQQQQ	Q Q Q	Q Q Q	QQ QQ	QQ QQ	Q QQ Q	Zemin
N	487.45	42.54	(azaltma	Nq=	42.54x1.000 =	42.54)		0.00
Alt Mx	-0.07	0.05	-0.06	0.10	0.12	-0.08	0.05	0.00
Alt My	0.00	0.00	0.00	0.00	0.00	0.00	0.00	0.00
(S110)	Deprem+X	Deprem-X	Deprem+Y	Deprem-Y	Rüzgar+X	Rüzgar-X	Rüzgar+Y	Rüzgar-Y
N	255.70	288.29	158.64	120.04	36.46	41.75	26.31	18.84
Alt Mx	105.56	144.32	22.73	-23.28	17.03	23.53	4.53	-4.64
Alt My	1.59	-0.12	2.17	4.20	0.29	0.00	0.44	0.85

STAA-CAD V11

FİRMA : 03-23-2005

PROJE : perdeli sistem (perdeli.ST4)

TEMELLERE GELEN KOLON YÜKLERİ

P110-Sol	GGGGGG	QQQQQQ	Q_Q_Q_	_Q_Q_Q	QQ_QQ_	_QQ_QQ	Q_QQ_Q	Zemin
N	1116.90	97.69	(azaltma	Nq=	97.69x1.000 =	97.69)		0.00
Alt Mx	-10.40	-1.33	-0.56	-0.73	-0.87	-0.77	-0.94	0.00
Alt My	0.01	0.00	0.00	0.00	0.00	0.00	0.00	0.00
(S110)	Deprem+X	Deprem-X	Deprem+Y	Deprem-Y	Rüzgar+X	Rüzgar-X	Rüzgar+Y	Rüzgar-Y
N	326.94	348.29	370.85	345.58	45.59	48.97	61.33	56.57
Alt Mx	524.51	694.67	86.37	-115.50	82.32	110.72	17.07	-22.97
Alt My	2.28	-0.17	6.19	9.10	0.42	0.01	1.25	1.83

P110-Sag	GGGGGG	QQQQQQ	Q_Q_Q_	_Q_Q_Q	QQ_QQ_	_QQ_QQ	Q_QQ_Q	Zemin
N	1116.90	97.69	(azaltma	Nq=	97.69x1.000 =	97.69)		0.00
Alt Mx	-10.40	-1.33	-0.56	-0.73	-0.87	-0.77	-0.94	0.00
Alt My	0.01	0.00	0.00	0.00	0.00	0.00	0.00	0.00
(S111)	Deprem+X	Deprem-X	Deprem+Y	Deprem-Y	Rüzgar+X	Rüzgar-X	Rüzgar+Y	Rüzgar-Y
N	326.94	348.29	370.85	345.58	45.59	48.97	61.33	56.57
Alt Mx	524.51	694.67	86.37	-115.50	82.32	110.72	17.07	-22.97
Alt My	2.28	-0.17	6.19	9.10	0.42	0.01	1.25	1.83

P111-Sol	GGGGGG	QQQQQQ	Q_Q_Q_	_Q_Q_Q	QQ_QQ_	_QQ_QQ	Q_QQ_Q	Zemin
N	1116.86	97.67	(azaltma	Nq=	97.67x1.000 =	97.67)		0.00
Alt Mx	10.44	1.32	0.72	0.56	0.77	0.75	1.05	0.00
Alt My	0.01	0.00	0.00	0.00	0.00	0.00	0.00	0.00
(S112)	Deprem+X	Deprem-X	Deprem+Y	Deprem-Y	Rüzgar+X	Rüzgar-X	Rüzgar+Y	Rüzgar-Y
N	326.92	348.26	345.59	370.86	45.59	48.97	56.57	61.34
Alt Mx	524.51	694.67	115.55	-86.32	82.32	110.72	22.97	-17.07
Alt My	-2.28	0.17	9.10	6.19	-0.42	-0.01	1.83	1.25

P111-Sag	GGGGGG	QQQQQQ	Q_Q_Q_	_Q_Q_Q	QQ_QQ_	_QQ_QQ	Q_QQ_Q	Zemin
N	1116.86	97.67	(azaltma	Nq=	97.67x1.000 =	97.67)		0.00
Alt Mx	10.44	1.32	0.72	0.56	0.77	0.75	1.05	0.00
Alt My	0.01	0.00	0.00	0.00	0.00	0.00	0.00	0.00
(S113)	Deprem+X	Deprem-X	Deprem+Y	Deprem-Y	Rüzgar+X	Rüzgar-X	Rüzgar+Y	Rüzgar-Y
N	326.92	348.26	345.59	370.86	45.59	48.97	56.57	61.34
Alt Mx	524.51	694.67	115.55	-86.32	82.32	110.72	22.97	-17.07
Alt My	-2.28	0.17	9.10	6.19	-0.42	-0.01	1.83	1.25

P112-Sol	GGGGGG	QQQQQQ	Q_Q_Q_	_Q_Q_Q	QQ_QQ_	_QQ_QQ	Q_QQ_Q	Zemin
N	487.44	42.52	(azaltma	Nq=	42.52x1.000 =	42.52)		0.00
Alt Mx	0.08	-0.05	-0.06	0.01	0.03	-0.06	-0.06	0.00
Alt My	0.00	0.00	0.00	0.00	0.00	0.00	0.00	0.00
(S113)	Deprem+X	Deprem-X	Deprem+Y	Deprem-Y	Rüzgar+X	Rüzgar-X	Rüzgar+Y	Rüzgar-Y
N	255.70	288.29	120.04	158.63	36.46	41.75	18.94	26.31
Alt Mx	105.56	144.32	23.29	-22.71	17.03	23.53	4.64	-4.53
Alt My	-1.59	0.12	4.20	2.17	-0.25	0.00	0.85	0.44

P112-Sag	GGGGGG	QQQQQQ	Q_Q_Q_	_Q_Q_Q	QQ_QQ_	_QQ_QQ	Q_QQ_Q	Zemin
N	487.44	42.52	(azaltma	Nq=	42.52x1.000 =	42.52)		0.00
Alt Mx	0.08	-0.05	-0.06	0.01	0.03	-0.06	-0.06	0.00
Alt My	0.00	0.00	0.00	0.00	0.00	0.00	0.00	0.00
(S114)	Deprem+X	Deprem-X	Deprem+Y	Deprem-Y	Rüzgar+X	Rüzgar-X	Rüzgar+Y	Rüzgar-Y
N	255.70	288.29	120.04	158.63	36.46	41.75	18.94	26.31
Alt Mx	105.56	144.32	23.29	-22.71	17.03	23.53	4.64	-4.53
Alt My	-1.59	0.12	4.20	2.17	-0.25	0.00	0.85	0.44

P113-Sol	GGGGGG	QQQQQQ	Q_Q_Q_	_Q_Q_Q	QQ_QQ_	_QQ_QQ	Q_QQ_Q	Zemin
N	519.12	34.31	(azaltma	Nq=	34.31x1.000 =	34.31)		0.00
Alt Mx	0.01	0.00	0.00	-0.01	0.01	-0.02	0.00	0.00
Alt My	0.00	0.00	0.00	0.00	0.00	0.00	0.00	0.00
(S115)	Deprem+X	Deprem-X	Deprem+Y	Deprem-Y	Rüzgar+X	Rüzgar-X	Rüzgar+Y	Rüzgar-Y
N	0.00	0.01	83.09	82.09	0.00	0.00	15.72	15.72
Alt Mx	221.52	277.26	33.08	-33.06	35.86	45.20	6.58	-6.58
Alt My	0.00	0.00	4.81	4.81	0.00	0.00	0.97	0.97

P113-Sag	GGGGGG	QQQQQQ	Q_Q_Q_	_Q_Q_Q	QQ_QQ_	_QQ_QQ	Q_QQ_Q	Zemin
N	519.12	34.31	(azaltma	Nq=	34.31x1.000 =	34.31)		0.00
Alt Mx	0.01	0.00	0.00	-0.01	0.01	-0.02	0.00	0.00
Alt My	0.00	0.00	0.00	0.00	0.00	0.00	0.00	0.00
(S116)	Deprem+X	Deprem-X	Deprem+Y	Deprem-Y	Rüzgar+X	Rüzgar-X	Rüzgar+Y	Rüzgar-Y
N	0.00	0.01	83.09	82.09	0.00	0.00	15.72	15.72
Alt Mx	221.52	277.26	33.08	-33.06	35.86	45.20	6.58	-6.58
Alt My	0.00	0.00	4.81	4.81	0.00	0.00	0.97	0.97

P114-Sol	GGGGGG	QQQQQQ	Q_Q_Q_	_Q_Q_Q	QQ_QQ_	_QQ_QQ	Q_QQ_Q	Zemin
N	522.61	34.32	(azaltma	Nq=	34.32x1.000 =	34.32)		0.00
Alt Mx	0.00	0.00	0.00	0.00	0.02	-0.02	0.00	0.00
Alt My	0.00	0.00	0.00	0.00	0.00	0.00	0.00	0.00
(S117)	Deprem+X	Deprem-X	Deprem+Y	Deprem-Y	Rüzgar+X	Rüzgar-X	Rüzgar+Y	Rüzgar-Y
N	0.01	0.01	82.09	82.09	0.00	0.00	15.72	15.72
Alt Mx	239.84	276.42	21.71	-21.70	39.21	45.33	4.32	-4.31
Alt My	0.00	0.00	4.81	4.81	0.00	0.00	0.97	0.97

P114-Sag	GGGGGG	QQQQQQ	Q_Q_Q_	_Q_Q_Q	QQ_QQ_	_QQ_QQ	Q_QQ_Q	Zemin
N	522.61	34.32	(azaltma	Nq=	34.32x1.000 =	34.32)		0.00
Alt Mx	0.00	0.00	0.00	0.00	0.02	-0.02	0.00	0.00
Alt My	0.00	0.00	0.00	0.00	0.00	0.00	0.00	0.00
(S118)	Deprem+X	Deprem-X	Deprem+Y	Deprem-Y	Rüzgar+X	Rüzgar-X	Rüzgar+Y	Rüzgar-Y
N	0.01	0.01	82.09	82.09	0.00	0.00	15.72	15.72
Alt Mx	239.84	276.42	21.71	-21.70	39.21	45.33	4.32	-4.31
Alt My	0.00	0.00	4.81	4.81	0.00	0.00	0.97	0.97

STAA-CAD V11

FİRMA : | 03-23-2005

PROJE : perdeli sistem (perdeli.ST4)

TEMELLERE GELEN KOLON YÜKLERİ

P115-Sol	GGGGGG	QQQQQQ	Q_Q_Q_	_Q_Q_Q	QQ_QQ_	_QQ_QQ	Q_QQ_Q	Zemin
N	1239.33	110.30	(azaltma	Nq=	110.30x1.000 =	110.30)		0.00
Alt Mx	-18.37	-2.07	-1.14	-1.02	-1.30	-1.44	-1.60	0.00
Alt My	0.01	0.00	0.00	0.00	0.00	0.00	0.00	0.00
(S123)	Deprem+X	Deprem-X	Deprem+Y	Deprem-Y	Rüzgar+X	Rüzgar-X	Rüzgar+Y	Rüzgar-Y
N	621.80	568.08	88.01	24.40	91.41	82.66	13.15	0.82
Alt Mx	1071.80	933.16	-82.12	82.24	176.89	153.79	-16.30	16.27
Alt My	3.42	-0.26	6.07	10.44	0.63	0.01	1.23	2.10

P115-Sag	GGGGGG	QQQQQQ	Q_Q_Q_	_Q_Q_Q	QQ_QQ_	_QQ_QQ	Q_QQ_Q	Zemin
N	1239.33	110.30	(azaltma	Nq=	110.30x1.000 =	110.30)		0.00
Alt Mx	-18.37	-2.07	-1.14	-1.02	-1.30	-1.44	-1.60	0.00
Alt My	0.01	0.00	0.00	0.00	0.00	0.00	0.00	0.00
(S124)	Deprem+X	Deprem-X	Deprem+Y	Deprem-Y	Rüzgar+X	Rüzgar-X	Rüzgar+Y	Rüzgar-Y
N	621.80	568.08	88.01	24.40	91.41	82.66	13.15	0.82
Alt Mx	1071.80	933.16	-82.12	82.24	176.89	153.79	-16.30	16.27
Alt My	3.42	-0.26	6.07	10.44	0.63	0.01	1.23	2.10

P116-Sol	GGGGGG	QQQQQQ	Q_Q_Q_	_Q_Q_Q	QQ_QQ_	_QQ_QQ	Q_QQ_Q	Zemin
N	385.54	33.49	(azaltma	Nq=	33.49x1.000 =	33.49)		0.00
Alt Mx	-0.48	-0.08	-0.06	-0.02	-0.01	-0.06	-0.08	0.00
Alt My	0.00	0.00	0.00	0.00	0.00	0.00	0.00	0.00
(S124)	Deprem+X	Deprem-X	Deprem+Y	Deprem-Y	Rüzgar+X	Rüzgar-X	Rüzgar+Y	Rüzgar-Y
N	98.27	92.89	43.61	37.22	14.47	13.59	7.48	6.23
Alt Mx	92.42	79.22	-6.22	9.45	15.72	13.50	-1.23	1.90
Alt My	0.54	-0.04	2.22	2.92	0.10	0.00	0.45	0.59

P116-Sag	GGGGGG	QQQQQQ	Q_Q_Q_	_Q_Q_Q	QQ_QQ_	_QQ_QQ	Q_QQ_Q	Zemin
N	385.54	33.49	(azaltma	Nq=	33.49x1.000 =	33.49)		0.00
Alt Mx	-0.48	-0.08	-0.06	-0.02	-0.01	-0.06	-0.08	0.00
Alt My	0.00	0.00	0.00	0.00	0.00	0.00	0.00	0.00
(S125)	Deprem+X	Deprem-X	Deprem+Y	Deprem-Y	Rüzgar+X	Rüzgar-X	Rüzgar+Y	Rüzgar-Y
N	98.27	92.89	43.61	37.22	14.47	13.59	7.48	6.23
Alt Mx	92.42	79.22	-6.22	9.45	15.72	13.50	-1.23	1.90
Alt My	0.54	-0.04	2.22	2.92	0.10	0.00	0.45	0.59

P117-Sol	GGGGGG	QQQQQQ	Q_Q_Q_	_Q_Q_Q	QQ_QQ_	_QQ_QQ	Q_QQ_Q	Zemin
N	380.35	32.58	(azaltma	Nq=	32.58x1.000 =	32.58)		0.00
Alt Mx	-0.10	-0.02	-0.01	-0.01	-0.01	-0.01	-0.02	0.00
Alt My	0.00	0.00	0.00	0.00	0.00	0.00	0.00	0.00
(S125)	Deprem+X	Deprem-X	Deprem+Y	Deprem-Y	Rüzgar+X	Rüzgar-X	Rüzgar+Y	Rüzgar-Y
N	44.55	46.37	66.56	68.71	6.40	6.71	12.24	12.67
Alt Mx	92.62	79.73	-6.97	8.22	15.75	13.58	-1.39	1.67
Alt My	0.27	-0.02	2.40	2.74	0.05	0.00	0.48	0.55

P117-Sag	GGGGGG	QQQQQQ	Q_Q_Q_	_Q_Q_Q	QQ_QQ_	_QQ_QQ	Q_QQ_Q	Zemin
N	380.35	32.58	(azaltma	Nq=	32.58x1.000 =	32.58)		0.00
Alt Mx	-0.10	-0.02	-0.01	-0.01	-0.01	-0.01	-0.02	0.00
Alt My	0.00	0.00	0.00	0.00	0.00	0.00	0.00	0.00
(S126)	Deprem+X	Deprem-X	Deprem+Y	Deprem-Y	Rüzgar+X	Rüzgar-X	Rüzgar+Y	Rüzgar-Y
N	44.55	46.37	66.56	68.71	6.40	6.71	12.24	12.67
Alt Mx	92.62	79.73	-6.97	8.22	15.75	13.58	-1.39	1.67
Alt My	0.27	-0.02	2.40	2.74	0.05	0.00	0.48	0.55

P118-Sol	GGGGGG	QQQQQQ	Q_Q_Q_	_Q_Q_Q	QQ_QQ_	_QQ_QQ	Q_QQ_Q	Zemin
N	150.23	12.82	(azaltma	Nq=	12.82x1.000 =	12.82)		0.00
Alt Mx	-0.04	0.00	0.00	0.00	0.01	0.00	-0.01	0.00
Alt My	0.00	0.00	0.00	0.00	0.00	0.00	0.00	0.00
(S126)	Deprem+X	Deprem-X	Deprem+Y	Deprem-Y	Rüzgar+X	Rüzgar-X	Rüzgar+Y	Rüzgar-Y
N	3.53	4.03	27.91	28.51	0.48	0.56	5.17	5.29
Alt Mx	27.79	23.48	-2.57	2.54	4.80	4.08	-0.51	0.51
Alt My	0.03	0.00	0.99	1.03	0.00	0.00	0.20	0.21

P118-Sag	GGGGGG	QQQQQQ	Q_Q_Q_	_Q_Q_Q	QQ_QQ_	_QQ_QQ	Q_QQ_Q	Zemin
N	150.23	12.82	(azaltma	Nq=	12.82x1.000 =	12.82)		0.00
Alt Mx	-0.04	0.00	0.00	0.00	0.01	0.00	-0.01	0.00
Alt My	0.00	0.00	0.00	0.00	0.00	0.00	0.00	0.00
(S127)	Deprem+X	Deprem-X	Deprem+Y	Deprem-Y	Rüzgar+X	Rüzgar-X	Rüzgar+Y	Rüzgar-Y
N	3.52	4.03	27.91	28.51	0.48	0.56	5.17	5.29
Alt Mx	27.79	23.48	-2.57	2.54	4.80	4.08	-0.51	0.51
Alt My	0.03	0.00	0.99	1.03	0.00	0.00	0.20	0.21

P119-Sol	GGGGGG	QQQQQQ	Q_Q_Q_	_Q_Q_Q	QQ_QQ_	_QQ_QQ	Q_QQ_Q	Zemin
N	150.23	12.82	(azaltma	Nq=	12.82x1.000 =	12.82)		0.00
Alt Mx	0.04	0.00	0.01	0.00	0.00	0.00	0.00	0.00
Alt My	0.00	0.00	0.00	0.00	0.00	0.00	0.00	0.00
(S127)	Deprem+X	Deprem-X	Deprem+Y	Deprem-Y	Rüzgar+X	Rüzgar-X	Rüzgar+Y	Rüzgar-Y
N	3.52	4.02	28.51	27.91	0.48	0.56	5.29	5.17
Alt Mx	27.79	23.48	-2.54	2.57	4.80	4.08	-0.51	0.51
Alt My	-0.03	0.00	1.03	0.99	0.00	0.00	0.21	0.20

P119-Sag	GGGGGG	QQQQQQ	Q_Q_Q_	_Q_Q_Q	QQ_QQ_	_QQ_QQ	Q_QQ_Q	Zemin
N	150.23	12.82	(azaltma	Nq=	12.82x1.000 =	12.82)		0.00
Alt Mx	0.04	0.00	0.01	0.00	0.00	0.00	0.00	0.00
Alt My	0.00	0.00	0.00	0.00	0.00	0.00	0.00	0.00
(S128)	Deprem+X	Deprem-X	Deprem+Y	Deprem-Y	Rüzgar+X	Rüzgar-X	Rüzgar+Y	Rüzgar-Y
N	3.52	4.02	28.51	27.91	0.48	0.56	5.29	5.17
Alt Mx	27.79	23.48	-2.54	2.57	4.80	4.08	-0.51	0.51
Alt My	-0.03	0.00	1.03	0.99	0.00	0.00	0.21	0.20

STAA-CAD V11

FİRMA : 03-23-2005

PROJE : perdeli sistem (perdeli.ST4)

TEMELLERE GELEN KOLON YÜKLERİ

P120-Sol	GGGGGG	QQQQQQ	Q_Q_Q_	_Q_Q_Q	QQ_QQ_	_QQ_QQ	Q_QQ_Q	Zemin
N	380.34	32.57	(azaltma	Nq=	32.57xl.000	=	32.57)	0.00
Alt Mx	0.10	0.02	0.01	0.01	0.02	0.01	0.01	0.00
Alt My	0.00	0.00	0.00	0.00	0.00	0.00	0.00	0.00
(S128)	Deprem+X	Deprem-X	Deprem+Y	Deprem-Y	Rüzgar+X	Rüzgar-X	Rüzgar+Y	Rüzgar-Y
N	44.53	46.35	68.71	66.56	6.40	6.71	12.67	12.24
Alt Mx	92.62	79.73	-8.34	6.96	15.75	13.58	-1.67	1.39
Alt My	-0.27	0.02	2.74	2.40	-0.05	0.00	0.55	0.48
P120-Sag	GGGGGG	QQQQQQ	Q_Q_Q_	_Q_Q_Q	QQ_QQ_	_QQ_QQ	Q_QQ_Q	Zemin
N	380.34	32.57	(azaltma	Nq=	32.57xl.000	=	32.57)	0.00
Alt Mx	0.10	0.02	0.01	0.01	0.02	0.01	0.01	0.00
Alt My	0.00	0.00	0.00	0.00	0.00	0.00	0.00	0.00
(S129)	Deprem+X	Deprem-X	Deprem+Y	Deprem-Y	Rüzgar+X	Rüzgar-X	Rüzgar+Y	Rüzgar-Y
N	44.53	46.35	68.71	66.56	6.40	6.71	12.67	12.24
Alt Mx	92.62	79.73	-8.34	6.96	15.75	13.58	-1.67	1.39
Alt My	-0.27	0.02	2.74	2.40	-0.05	0.00	0.55	0.48
P121-Sol	GGGGGG	QQQQQQ	Q_Q_Q_	_Q_Q_Q	QQ_QQ_	_QQ_QQ	Q_QQ_Q	Zemin
N	385.52	33.49	(azaltma	Nq=	33.49xl.000	=	33.49)	0.00
Alt Mx	0.48	0.08	0.02	0.06	0.07	0.02	0.06	0.00
Alt My	0.00	0.00	0.00	0.00	0.00	0.00	0.00	0.00
(S129)	Deprem+X	Deprem-X	Deprem+Y	Deprem-Y	Rüzgar+X	Rüzgar-X	Rüzgar+Y	Rüzgar-Y
N	98.25	92.88	37.22	43.60	14.47	13.58	6.23	7.48
Alt Mx	92.42	79.22	-9.46	6.22	15.72	13.50	-1.90	1.23
Alt My	-0.54	0.04	2.92	2.22	-0.10	0.00	0.59	0.45
P121-Sag	GGGGGG	QQQQQQ	Q_Q_Q_	_Q_Q_Q	QQ_QQ_	_QQ_QQ	Q_QQ_Q	Zemin
N	385.52	33.49	(azaltma	Nq=	33.49xl.000	=	33.49)	0.00
Alt Mx	0.48	0.08	0.02	0.06	0.07	0.02	0.06	0.00
Alt My	0.00	0.00	0.00	0.00	0.00	0.00	0.00	0.00
(S130)	Deprem+X	Deprem-X	Deprem+Y	Deprem-Y	Rüzgar+X	Rüzgar-X	Rüzgar+Y	Rüzgar-Y
N	98.25	92.88	37.22	43.60	14.47	13.58	6.23	7.48
Alt Mx	92.42	79.22	-9.46	6.22	15.72	13.50	-1.90	1.23
Alt My	-0.54	0.04	2.92	2.22	-0.10	0.00	0.59	0.45
P122-Sol	GGGGGG	QQQQQQ	Q_Q_Q_	_Q_Q_Q	QQ_QQ_	_QQ_QQ	Q_QQ_Q	Zemin
N	1239.23	110.27	(azaltma	Nq=	110.27xl.000	=	110.27)	0.00
Alt Mx	18.33	2.06	1.10	1.96	1.51	1.26	1.45	0.00
Alt My	0.01	0.00	0.00	0.00	0.00	0.00	0.00	0.00
(S130)	Deprem+X	Deprem-X	Deprem+Y	Deprem-Y	Rüzgar+X	Rüzgar-X	Rüzgar+Y	Rüzgar-Y
N	621.75	568.02	24.25	87.95	91.40	82.65	0.81	13.14
Alt Mx	1071.80	933.16	-82.34	82.03	176.89	153.79	-16.28	16.29
Alt My	-3.42	0.26	10.45	6.08	-0.63	-0.01	2.10	1.23
P122-Sag	GGGGGG	QQQQQQ	Q_Q_Q_	_Q_Q_Q	QQ_QQ_	_QQ_QQ	Q_QQ_Q	Zemin
N	1239.23	110.27	(azaltma	Nq=	110.27xl.000	=	110.27)	0.00
Alt Mx	18.33	2.06	1.10	1.96	1.51	1.26	1.45	0.00
Alt My	0.01	0.00	0.00	0.00	0.00	0.00	0.00	0.00
(S131)	Deprem+X	Deprem-X	Deprem+Y	Deprem-Y	Rüzgar+X	Rüzgar-X	Rüzgar+Y	Rüzgar-Y
N	621.75	568.02	24.25	87.95	91.40	82.65	0.81	13.14
Alt Mx	1071.80	933.16	-82.34	82.03	176.89	153.79	-16.28	16.29
Alt My	-3.42	0.26	10.45	6.08	-0.63	-0.01	2.10	1.23
P122-Sol	GGGGGG	QQQQQQ	Q_Q_Q_	_Q_Q_Q	QQ_QQ_	_QQ_QQ	Q_QQ_Q	Zemin
N	482.28	41.49	(azaltma	Nq=	41.49xl.000	=	41.49)	0.00
Alt Mx	0.37	0.10	0.04	0.05	0.08	0.06	0.06	0.00
Alt My	0.00	0.00	0.00	0.00	0.00	0.00	0.00	0.00
(S132)	Deprem+X	Deprem-X	Deprem+Y	Deprem-Y	Rüzgar+X	Rüzgar-X	Rüzgar+Y	Rüzgar-Y
N	314.85	280.27	181.61	140.65	47.17	41.46	30.79	22.75
Alt Mx	199.09	141.28	-24.06	34.53	34.10	24.41	-6.78	6.88
Alt My	1.59	-0.12	2.17	4.20	0.29	0.00	0.44	0.85
P123-Sag	GGGGGG	QQQQQQ	Q_Q_Q_	_Q_Q_Q	QQ_QQ_	_QQ_QQ	Q_QQ_Q	Zemin
N	482.28	41.49	(azaltma	Nq=	41.49xl.000	=	41.49)	0.00
Alt Mx	0.37	0.10	0.04	0.05	0.08	0.06	0.06	0.00
Alt My	0.00	0.00	0.00	0.00	0.00	0.00	0.00	0.00
(S133)	Deprem+X	Deprem-X	Deprem+Y	Deprem-Y	Rüzgar+X	Rüzgar-X	Rüzgar+Y	Rüzgar-Y
N	314.85	280.27	181.61	140.65	47.17	41.46	30.79	22.75
Alt Mx	199.09	141.28	-34.06	34.53	34.10	24.41	-6.78	6.88
Alt My	1.59	-0.12	2.17	4.20	0.29	0.00	0.44	0.85
P124-Sol	GGGGGG	QQQQQQ	Q_Q_Q_	_Q_Q_Q	QQ_QQ_	_QQ_QQ	Q_QQ_Q	Zemin
N	686.06	59.78	(azaltma	Nq=	59.78xl.000	=	59.78)	0.00
Alt Mx	0.71	0.22	0.10	0.11	0.17	0.13	0.14	0.00
Alt My	0.00	0.00	0.00	0.00	0.00	0.00	0.00	0.00
(S133)	Deprem+X	Deprem-X	Deprem+Y	Deprem-Y	Rüzgar+X	Rüzgar-X	Rüzgar+Y	Rüzgar-Y
N	207.17	213.54	234.65	242.20	28.33	29.39	39.24	40.73
Alt Mx	316.24	225.64	-50.52	56.96	53.84	38.67	-10.03	11.35
Alt My	1.59	-0.12	3.51	5.53	0.29	0.00	0.71	1.11
P124-Sag	GGGGGG	QQQQQQ	Q_Q_Q_	_Q_Q_Q	QQ_QQ_	_QQ_QQ	Q_QQ_Q	Zemin
N	686.06	59.78	(azaltma	Nq=	59.78xl.000	=	59.78)	0.00
Alt Mx	0.71	0.22	0.10	0.11	0.17	0.13	0.14	0.00
Alt My	0.00	0.00	0.00	0.00	0.00	0.00	0.00	0.00
(S134)	Deprem+X	Deprem-X	Deprem+Y	Deprem-Y	Rüzgar+X	Rüzgar-X	Rüzgar+Y	Rüzgar-Y
N	207.17	213.54	234.65	242.20	28.33	29.39	39.24	40.73
Alt Mx	316.24	225.64	-50.52	56.96	53.84	38.67	-10.03	11.35
Alt My	1.59	-0.12	3.51	5.53	0.29	0.00	0.71	1.11

STA-CAD V11

FİRMA : 03-23-2005

PROJE : perdeli sistem (perdeli.ST4)

TEMELLERE GELEN KOLON YÜKLERİ

P125-Sol	GGGGGG	QQQQQQ	Q_Q_Q_	_Q_Q_Q	QQ_QQ_	_QQ_QQ	Q_QQ_Q	Zemin
N	686.00	59.77	(analtma	Nq=	59.77x1.000 =	59.77)		0.00
Alt Mx	-0.74	-0.23	-0.11	-0.11	-0.13	-0.12	-0.19	0.00
Alt My	0.00	0.00	0.00	0.00	0.00	0.00	0.00	0.00
(S135)	Deprem+X	Deprem-X	Deprem+Y	Deprem-Y	Rüzgar+X	Rüzgar-X	Rüzgar+Y	Rüzgar-Y
N	207.14	213.51	242.19	234.63	28.33	29.28	40.72	39.24
Alt Mx	316.24	225.64	-57.00	50.47	53.84	38.67	-11.36	10.03
Alt My	-1.59	0.12	5.53	3.51	-0.29	0.00	1.11	0.71

P125-Sag	GGGGGG	QQQQQQ	Q_Q_Q_	_Q_Q_Q	QQ_QQ_	_QQ_QQ	Q_QQ_Q	Zemin
N	686.00	59.77	(analtma	Nq=	59.77x1.000 =	59.77)		0.00
Alt Mx	-0.74	-0.23	-0.11	-0.11	-0.13	-0.12	-0.19	0.00
Alt My	0.00	0.00	0.00	0.00	0.00	0.00	0.00	0.00
(S136)	Deprem+X	Deprem-X	Deprem+Y	Deprem-Y	Rüzgar+X	Rüzgar-X	Rüzgar+Y	Rüzgar-Y
N	207.14	213.51	242.19	234.63	28.33	29.28	40.72	39.24
Alt Mx	316.24	225.64	-57.00	50.47	53.84	38.67	-11.36	10.03
Alt My	-1.59	0.12	5.53	3.51	-0.29	0.00	1.11	0.71

P126-Sol	GGGGGG	QQQQQQ	Q_Q_Q_	_Q_Q_Q	QQ_QQ_	_QQ_QQ	Q_QQ_Q	Zemin
N	483.22	41.48	(analtma	Nq=	41.48x1.000 =	41.48)		0.00
Alt Mx	-0.38	-0.11	-0.09	-0.01	0.00	-0.08	-0.11	0.00
Alt My	0.00	0.00	0.00	0.00	0.00	0.00	0.00	0.00
(S136)	Deprem+X	Deprem-X	Deprem+Y	Deprem-Y	Rüzgar+X	Rüzgar-X	Rüzgar+Y	Rüzgar-Y
N	314.83	260.24	140.62	181.58	47.17	41.46	22.75	30.79
Alt Mx	199.08	141.28	-34.56	34.02	34.10	24.41	-6.89	6.78
Alt My	-1.59	0.12	4.20	2.17	-0.29	0.00	0.85	0.44

P126-Sag	GGGGGG	QQQQQQ	Q_Q_Q_	_Q_Q_Q	QQ_QQ_	_QQ_QQ	Q_QQ_Q	Zemin
N	483.22	41.48	(analtma	Nq=	41.48x1.000 =	41.48)		0.00
Alt Mx	-0.38	-0.11	-0.09	-0.01	0.00	-0.08	-0.11	0.00
Alt My	0.00	0.00	0.00	0.00	0.00	0.00	0.00	0.00
(S137)	Deprem+X	Deprem-X	Deprem+Y	Deprem-Y	Rüzgar+X	Rüzgar-X	Rüzgar+Y	Rüzgar-Y
N	314.83	260.24	140.62	181.58	47.17	41.46	22.75	30.79
Alt Mx	199.08	141.28	-34.56	34.02	34.10	24.41	-6.89	6.78
Alt My	-1.59	0.12	4.20	2.17	-0.29	0.00	0.85	0.44

P135-Sol	GGGGGG	QQQQQQ	Q_Q_Q_	_Q_Q_Q	QQ_QQ_	_QQ_QQ	Q_QQ_Q	Zemin
N	102.10	8.92	(analtma	Nq=	8.92x1.000 =	8.92)		0.00
Alt Mx	0.00	0.00	0.00	0.00	0.00	0.00	0.00	0.00
Alt My	-0.05	0.01	-0.01	0.02	0.02	-0.01	0.00	0.00
(S139)	Deprem+X	Deprem-X	Deprem+Y	Deprem-Y	Rüzgar+X	Rüzgar-X	Rüzgar+Y	Rüzgar-Y
N	2.99	16.60	72.25	87.28	0.18	1.90	12.69	15.62
Alt Mx	0.82	0.47	-0.21	0.21	0.14	0.09	-0.04	0.04
Alt My	7.71	-0.41	23.46	33.10	1.42	0.05	4.72	6.65

P135-Sag	GGGGGG	QQQQQQ	Q_Q_Q_	_Q_Q_Q	QQ_QQ_	_QQ_QQ	Q_QQ_Q	Zemin
N	102.10	8.92	(analtma	Nq=	8.92x1.000 =	8.92)		0.00
Alt Mx	0.00	0.00	0.00	0.00	0.00	0.00	0.00	0.00
Alt My	-0.05	0.01	-0.01	0.02	0.02	-0.01	0.00	0.00
(S142)	Deprem+X	Deprem-X	Deprem+Y	Deprem-Y	Rüzgar+X	Rüzgar-X	Rüzgar+Y	Rüzgar-Y
N	2.99	16.60	72.25	87.28	0.18	1.90	12.69	15.62
Alt Mx	0.82	0.47	-0.21	0.21	0.14	0.09	-0.04	0.04
Alt My	7.71	-0.41	23.46	33.10	1.42	0.05	4.72	6.65

P136-Sol	GGGGGG	QQQQQQ	Q_Q_Q_	_Q_Q_Q	QQ_QQ_	_QQ_QQ	Q_QQ_Q	Zemin
N	696.11	61.06	(analtma	Nq=	61.06x1.000 =	61.06)		0.00
Alt Mx	0.00	0.00	0.00	0.00	0.00	0.00	0.00	0.00
Alt My	4.33	0.41	0.22	0.20	0.25	0.21	0.24	0.00
(S124)	Deprem+X	Deprem-X	Deprem+Y	Deprem-Y	Rüzgar+X	Rüzgar-X	Rüzgar+Y	Rüzgar-Y
N	59.69	113.39	332.44	396.02	4.42	13.25	56.63	69.08
Alt Mx	5.21	3.30	-1.14	1.14	0.92	0.59	-0.23	0.23
Alt My	73.51	-2.48	259.79	349.94	13.38	0.66	50.61	68.55

P136-Sag	GGGGGG	QQQQQQ	Q_Q_Q_	_Q_Q_Q	QQ_QQ_	_QQ_QQ	Q_QQ_Q	Zemin
N	696.11	61.06	(analtma	Nq=	61.06x1.000 =	61.06)		0.00
Alt Mx	0.00	0.00	0.00	0.00	0.00	0.00	0.00	0.00
Alt My	4.33	0.41	0.22	0.20	0.25	0.21	0.24	0.00
(S139)	Deprem+X	Deprem-X	Deprem+Y	Deprem-Y	Rüzgar+X	Rüzgar-X	Rüzgar+Y	Rüzgar-Y
N	59.69	113.39	332.44	396.02	4.42	13.25	56.63	69.08
Alt Mx	5.21	3.30	-1.14	1.14	0.92	0.59	-0.23	0.23
Alt My	73.51	-2.48	259.79	349.94	13.38	0.66	50.61	68.55

P137-Sol	GGGGGG	QQQQQQ	Q_Q_Q_	_Q_Q_Q	QQ_QQ_	_QQ_QQ	Q_QQ_Q	Zemin
N	757.09	66.46	(analtma	Nq=	66.46x1.000 =	66.46)		0.00
Alt Mx	0.00	0.00	0.00	0.00	0.00	0.00	0.00	0.00
Alt My	4.20	0.46	0.14	0.32	0.44	0.26	0.22	0.00
(S124)	Deprem+X	Deprem-X	Deprem+Y	Deprem-Y	Rüzgar+X	Rüzgar-X	Rüzgar+Y	Rüzgar-Y
N	155.78	167.17	151.25	164.83	20.59	22.48	24.73	27.39
Alt Mx	4.88	3.73	-0.68	0.68	0.85	0.66	-0.14	0.14
Alt My	107.13	12.27	307.04	419.58	19.37	3.50	59.47	81.85

P137-Sag	GGGGGG	QQQQQQ	Q_Q_Q_	_Q_Q_Q	QQ_QQ_	_QQ_QQ	Q_QQ_Q	Zemin
N	757.09	66.46	(analtma	Nq=	66.46x1.000 =	66.46)		0.00
Alt Mx	0.00	0.00	0.00	0.00	0.00	0.00	0.00	0.00
Alt My	4.20	0.46	0.14	0.32	0.44	0.26	0.22	0.00
(S124)	Deprem+X	Deprem-X	Deprem+Y	Deprem-Y	Rüzgar+X	Rüzgar-X	Rüzgar+Y	Rüzgar-Y
N	155.78	167.17	151.25	164.83	20.59	22.48	24.73	27.39
Alt Mx	4.88	3.73	-0.68	0.68	0.85	0.66	-0.14	0.14
Alt My	107.13	12.27	307.04	419.58	19.37	3.50	59.47	81.85

STAA-CAD V11

FİRMA : 03-23-2005

PROJE : perdeli sistem (perdeli.ST4)

TEMELLERE GELEN KOLON YÜKLERİ

P139-Sol	GGGGGG	QQQQQQ	Q_Q_Q_	_Q_Q_Q	QQ_QQ_	_QQ_QQ	Q_QQ_Q	Zemin
N	428.79	36.83	(azaltma	Nq=	36.83x1.000 =	36.83)		0.00
Alt Mx	0.00	0.00	0.00	0.00	0.00	0.00	0.00	0.00
Alt My	1.05	0.12	0.06	0.06	0.07	0.08	0.09	0.00
(S119)	Deprem+X	Deprem-X	Deprem+Y	Deprem-Y	Rüzgar+X	Rüzgar-X	Rüzgar+Y	Rüzgar-Y
N	90.27	88.87	16.24	14.57	13.46	13.23	2.96	2.63
Alt Mx	2.38	2.19	-0.11	0.11	0.41	0.38	-0.02	0.02
Alt My	20.06	0.07	118.45	142.19	3.66	0.30	23.36	28.10
P139-Sag	GGGGGG	QQQQQQ	Q_Q_Q_	_Q_Q_Q	QQ_QQ_	_QQ_QQ	Q_QQ_Q	Zemin
N	428.79	36.83	(azaltma	Nq=	36.83x1.000 =	36.83)		0.00
Alt Mx	0.00	0.00	0.00	0.00	0.00	0.00	0.00	0.00
Alt My	1.05	0.12	0.06	0.06	0.07	0.08	0.09	0.00
(S125)	Deprem+X	Deprem-X	Deprem+Y	Deprem-Y	Rüzgar+X	Rüzgar-X	Rüzgar+Y	Rüzgar-Y
N	90.27	88.87	16.24	14.57	13.46	13.23	2.96	2.63
Alt Mx	2.38	2.19	-0.11	0.11	0.41	0.38	-0.02	0.02
Alt My	20.06	0.07	118.45	142.19	3.66	0.30	23.36	28.10
P140-Sol	GGGGGG	QQQQQQ	Q_Q_Q_	_Q_Q_Q	QQ_QQ_	_QQ_QQ	Q_QQ_Q	Zemin
N	840.39	72.34	(azaltma	Nq=	72.34x1.000 =	72.34)		0.00
Alt Mx	0.00	0.00	0.00	0.00	0.00	0.00	0.00	0.00
Alt My	4.84	0.55	0.32	0.21	0.29	0.46	0.33	0.00
(S113)	Deprem+X	Deprem-X	Deprem+Y	Deprem-Y	Rüzgar+X	Rüzgar-X	Rüzgar+Y	Rüzgar-Y
N	167.00	166.84	178.10	178.28	24.52	24.47	30.06	30.12
Alt Mx	3.78	4.45	0.39	-0.39	0.64	0.75	0.08	-0.08
Alt My	56.76	-9.25	445.47	523.79	10.40	-0.66	85.98	101.58
P140-Sag	GGGGGG	QQQQQQ	Q_Q_Q_	_Q_Q_Q	QQ_QQ_	_QQ_QQ	Q_QQ_Q	Zemin
N	840.39	72.34	(azaltma	Nq=	72.34x1.000 =	72.34)		0.00
Alt Mx	0.00	0.00	0.00	0.00	0.00	0.00	0.00	0.00
Alt My	4.84	0.55	0.32	0.21	0.29	0.46	0.33	0.00
(S119)	Deprem+X	Deprem-X	Deprem+Y	Deprem-Y	Rüzgar+X	Rüzgar-X	Rüzgar+Y	Rüzgar-Y
N	167.00	166.84	178.10	178.28	24.52	24.47	30.06	30.12
Alt Mx	3.78	4.45	0.39	-0.39	0.64	0.75	0.08	-0.08
Alt My	56.76	-9.25	445.47	523.79	10.40	-0.66	85.98	101.58
P141-Sol	GGGGGG	QQQQQQ	Q_Q_Q_	_Q_Q_Q	QQ_QQ_	_QQ_QQ	Q_QQ_Q	Zemin
N	223.60	20.04	(azaltma	Nq=	20.04x1.000 =	20.04)		0.00
Alt Mx	0.00	0.00	0.00	0.00	0.00	0.00	0.00	0.00
Alt My	0.23	0.02	0.01	0.01	0.00	0.02	0.02	0.00
(S106)	Deprem+X	Deprem-X	Deprem+Y	Deprem-Y	Rüzgar+X	Rüzgar-X	Rüzgar+Y	Rüzgar-Y
N	44.06	46.94	99.82	96.40	6.40	6.87	16.97	16.30
Alt Mx	0.51	1.24	0.25	-0.25	0.13	0.22	0.05	-0.05
Alt My	8.48	-0.82	48.23	59.37	1.56	-0.01	9.66	11.89
P141-Sag	GGGGGG	QQQQQQ	Q_Q_Q_	_Q_Q_Q	QQ_QQ_	_QQ_QQ	Q_QQ_Q	Zemin
N	223.60	20.04	(azaltma	Nq=	20.04x1.000 =	20.04)		0.00
Alt Mx	0.00	0.00	0.00	0.00	0.00	0.00	0.00	0.00
Alt My	0.23	0.02	0.01	0.01	0.00	0.02	0.02	0.00
(S111)	Deprem+X	Deprem-X	Deprem+Y	Deprem-Y	Rüzgar+X	Rüzgar-X	Rüzgar+Y	Rüzgar-Y
N	44.06	46.94	99.82	96.40	6.40	6.87	16.97	16.30
Alt Mx	0.51	1.24	0.25	-0.25	0.13	0.21	0.05	-0.05
Alt My	8.48	-0.82	48.23	59.37	1.56	-0.01	9.66	11.89
P142-Sol	GGGGGG	QQQQQQ	Q_Q_Q_	_Q_Q_Q	QQ_QQ_	_QQ_QQ	Q_QQ_Q	Zemin
N	521.28	44.28	(azaltma	Nq=	44.28x1.000 =	44.28)		0.00
Alt Mx	0.00	0.00	0.00	0.00	0.00	0.00	0.00	0.00
Alt My	1.09	0.26	0.13	0.12	0.18	0.16	0.15	0.00
(S101)	Deprem+X	Deprem-X	Deprem+Y	Deprem-Y	Rüzgar+X	Rüzgar-X	Rüzgar+Y	Rüzgar-Y
N	111.38	110.94	344.32	344.84	16.58	16.49	59.86	59.98
Alt Mx	1.44	2.81	0.82	-0.82	0.23	0.46	0.16	-0.16
Alt My	32.67	-1.99	211.62	252.54	6.15	0.17	41.46	49.91
P142-Sag	GGGGGG	QQQQQQ	Q_Q_Q_	_Q_Q_Q	QQ_QQ_	_QQ_QQ	Q_QQ_Q	Zemin
N	521.28	44.28	(azaltma	Nq=	44.28x1.000 =	44.28)		0.00
Alt Mx	0.00	0.00	0.00	0.00	0.00	0.00	0.00	0.00
Alt My	1.09	0.26	0.13	0.12	0.18	0.16	0.15	0.00
(S106)	Deprem+X	Deprem-X	Deprem+Y	Deprem-Y	Rüzgar+X	Rüzgar-X	Rüzgar+Y	Rüzgar-Y
N	111.38	110.94	344.32	344.84	16.58	16.49	59.86	59.98
Alt Mx	1.44	2.81	0.82	-0.82	0.23	0.46	0.16	-0.16
Alt My	32.67	-1.99	211.62	252.54	6.15	0.17	41.46	49.91
P143-Sol	GGGGGG	QQQQQQ	Q_Q_Q_	_Q_Q_Q	QQ_QQ_	_QQ_QQ	Q_QQ_Q	Zemin
N	183.61	12.09	(azaltma	Nq=	12.09x1.000 =	12.09)		0.00
Alt Mx	0.00	0.00	0.00	0.00	0.00	0.00	0.00	0.00
Alt My	0.24	0.04	0.02	0.01	0.02	0.03	0.02	0.00
(S115)	Deprem+X	Deprem-X	Deprem+Y	Deprem-Y	Rüzgar+X	Rüzgar-X	Rüzgar+Y	Rüzgar-Y
N	46.18	53.56	4.38	4.37	7.26	8.48	0.86	0.86
Alt Mx	1.04	1.29	0.15	-0.15	0.18	0.22	0.03	-0.03
Alt My	5.04	-0.29	51.62	57.94	0.92	0.03	10.31	11.57
P143-Sag	GGGGGG	QQQQQQ	Q_Q_Q_	_Q_Q_Q	QQ_QQ_	_QQ_QQ	Q_QQ_Q	Zemin
N	183.61	12.09	(azaltma	Nq=	12.09x1.000 =	12.09)		0.00
Alt Mx	0.00	0.00	0.00	0.00	0.00	0.00	0.00	0.00
Alt My	0.24	0.04	0.02	0.01	0.02	0.03	0.02	0.00
(S117)	Deprem+X	Deprem-X	Deprem+Y	Deprem-Y	Rüzgar+X	Rüzgar-X	Rüzgar+Y	Rüzgar-Y
N	46.18	53.56	4.38	4.37	7.26	8.48	0.86	0.86
Alt Mx	1.04	1.29	0.15	-0.15	0.18	0.22	0.03	-0.03
Alt My	5.04	-0.29	51.62	57.94	0.92	0.03	10.31	11.57

STAA-CAD V17

FİRMA : | 03-23-2005

PROJE : perdeli sistem (perdeli.ST4)

TEMELLERE GELEN KOLON YÜKLERİ

P144-Sol	GGGGGG	QQQQQQ	Q_Q_Q_	_Q_Q_Q	QQ_QQ_	_QQ_QQ	Q_QQ_Q	Zemin
N	425.92	36.22	(azaltma	Nq=	36.22x1.000 =	36.22)		0.00
Alt Mx	0.00	0.00	0.00	0.00	0.00	0.00	0.00	0.00
Alt My	1.22	0.15	0.09	0.06	0.09	0.11	0.09	0.00
(S120)	Deprem+X	Deprem-X	Deprem+Y	Deprem-Y	Rüzgar+X	Rüzgar-X	Rüzgar+Y	Rüzgar-Y
N	25.54	26.25	13.94	14.79	3.68	3.80	2.50	2.67
Alt Mx	2.38	2.19	-0.11	0.11	0.41	0.38	-0.02	0.02
Alt My	7.16	0.19	129.68	137.95	1.30	0.14	25.63	27.28
P144-Sag	GGGGGG	QQQQQQ	Q_Q_Q_	_Q_Q_Q	QQ_QQ_	_QQ_QQ	Q_QQ_Q	Zemin
N	425.92	36.22	(azaltma	Nq=	36.22x1.000 =	36.22)		0.00
Alt Mx	0.00	0.00	0.00	0.00	0.00	0.00	0.00	0.00
Alt My	1.22	0.15	0.09	0.06	0.09	0.11	0.09	0.00
(S126)	Deprem+X	Deprem-X	Deprem+Y	Deprem-Y	Rüzgar+X	Rüzgar-X	Rüzgar+Y	Rüzgar-Y
N	25.54	26.25	13.94	14.79	3.68	3.80	2.50	2.67
Alt Mx	2.38	2.19	-0.11	0.11	0.41	0.38	-0.02	0.02
Alt My	7.16	0.19	129.68	137.95	1.30	0.14	25.63	27.28
P145-Sol	GGGGGG	QQQQQQ	Q_Q_Q_	_Q_Q_Q	QQ_QQ_	_QQ_QQ	Q_QQ_Q	Zemin
N	1691.36	154.57	(azaltma	Nq=	154.57x1.000 =	154.57)		0.00
Alt Mx	0.00	0.00	0.00	0.00	0.00	0.00	0.00	0.00
Alt My	93.77	11.93	6.19	5.93	7.90	7.95	8.39	0.00
(S127)	Deprem+X	Deprem-X	Deprem+Y	Deprem-Y	Rüzgar+X	Rüzgar-X	Rüzgar+Y	Rüzgar-Y
N	0.04	0.04	643.64	643.64	0.01	0.01	108.25	108.25
Alt Mx	12.19	8.30	-2.21	2.31	2.13	1.48	-0.46	0.46
Alt My	-0.04	-0.02	2529.26	2529.27	-0.01	0.00	481.32	481.32
P145-Sag	GGGGGG	QQQQQQ	Q_Q_Q_	_Q_Q_Q	QQ_QQ_	_QQ_QQ	Q_QQ_Q	Zemin
N	1691.36	154.57	(azaltma	Nq=	154.57x1.000 =	154.57)		0.00
Alt Mx	0.00	0.00	0.00	0.00	0.00	0.00	0.00	0.00
Alt My	93.77	11.93	6.19	5.93	7.90	7.95	8.39	0.00
(S143)	Deprem+X	Deprem-X	Deprem+Y	Deprem-Y	Rüzgar+X	Rüzgar-X	Rüzgar+Y	Rüzgar-Y
N	0.04	0.04	643.64	643.64	0.01	0.01	108.25	108.25
Alt Mx	12.19	8.30	-2.21	2.31	2.13	1.48	-0.46	0.46
Alt My	-0.04	-0.02	2529.26	2529.27	-0.01	0.00	481.32	481.32
P146-Sol	GGGGGG	QQQQQQ	Q_Q_Q_	_Q_Q_Q	QQ_QQ_	_QQ_QQ	Q_QQ_Q	Zemin
N	514.80	43.78	(azaltma	Nq=	43.78x1.000 =	43.78)		0.00
Alt Mx	0.00	0.00	0.00	0.00	0.00	0.00	0.00	0.00
Alt My	2.13	0.36	0.18	0.16	0.22	0.24	0.23	0.00
(S102)	Deprem+X	Deprem-X	Deprem+Y	Deprem-Y	Rüzgar+X	Rüzgar-X	Rüzgar+Y	Rüzgar-Y
N	0.00	0.00	333.13	333.13	0.00	0.00	57.56	57.56
Alt Mx	1.44	2.81	0.82	-0.82	0.23	0.46	0.16	-0.16
Alt My	0.00	0.00	236.71	236.71	0.00	0.00	46.51	46.51
P146-Sag	GGGGGG	QQQQQQ	Q_Q_Q_	_Q_Q_Q	QQ_QQ_	_QQ_QQ	Q_QQ_Q	Zemin
N	514.80	43.78	(azaltma	Nq=	43.78x1.000 =	43.78)		0.00
Alt Mx	0.00	0.00	0.00	0.00	0.00	0.00	0.00	0.00
Alt My	2.13	0.36	0.18	0.16	0.22	0.24	0.23	0.00
(S107)	Deprem+X	Deprem-X	Deprem+Y	Deprem-Y	Rüzgar+X	Rüzgar-X	Rüzgar+Y	Rüzgar-Y
N	0.00	0.00	333.13	333.13	0.00	0.00	57.56	57.56
Alt Mx	1.44	2.81	0.82	-0.82	0.23	0.46	0.16	-0.16
Alt My	0.00	0.00	236.71	236.71	0.00	0.00	46.51	46.51
P147-Sol	GGGGGG	QQQQQQ	Q_Q_Q_	_Q_Q_Q	QQ_QQ_	_QQ_QQ	Q_QQ_Q	Zemin
N	425.92	36.22	(azaltma	Nq=	36.22x1.000 =	36.22)		0.00
Alt Mx	0.00	0.00	0.00	0.00	0.00	0.00	0.00	0.00
Alt My	1.22	0.15	0.09	0.06	0.08	0.11	0.10	0.00
(S121)	Deprem+X	Deprem-X	Deprem+Y	Deprem-Y	Rüzgar+X	Rüzgar-X	Rüzgar+Y	Rüzgar-Y
N	25.52	26.24	14.79	13.94	3.63	3.80	2.67	2.50
Alt Mx	2.38	2.19	-0.11	0.11	0.41	0.38	-0.02	0.02
Alt My	-7.16	-0.19	137.95	129.69	-1.31	-0.14	27.28	25.63
P147-Sag	GGGGGG	QQQQQQ	Q_Q_Q_	_Q_Q_Q	QQ_QQ_	_QQ_QQ	Q_QQ_Q	Zemin
N	425.92	36.22	(azaltma	Nq=	36.22x1.000 =	36.22)		0.00
Alt Mx	0.00	0.00	0.00	0.00	0.00	0.00	0.00	0.00
Alt My	1.22	0.15	0.09	0.06	0.08	0.11	0.10	0.00
(S128)	Deprem+X	Deprem-X	Deprem+Y	Deprem-Y	Rüzgar+X	Rüzgar-X	Rüzgar+Y	Rüzgar-Y
N	25.52	26.24	14.79	13.94	3.63	3.80	2.67	2.50
Alt Mx	2.38	2.19	-0.11	0.11	0.41	0.38	-0.02	0.02
Alt My	-7.16	-0.19	137.95	129.69	-1.31	-0.14	27.28	25.63
P148-Sol	GGGGGG	QQQQQQ	Q_Q_Q_	_Q_Q_Q	QQ_QQ_	_QQ_QQ	Q_QQ_Q	Zemin
N	183.61	12.09	(azaltma	Nq=	12.09x1.000 =	12.09)		0.00
Alt Mx	0.00	0.00	0.00	0.00	0.00	0.00	0.00	0.00
Alt My	0.24	0.04	0.02	0.01	0.02	0.03	0.02	0.00
(S116)	Deprem+X	Deprem-X	Deprem+Y	Deprem-Y	Rüzgar+X	Rüzgar-X	Rüzgar+Y	Rüzgar-Y
N	46.17	53.55	4.27	4.27	7.25	8.48	0.86	0.86
Alt Mx	1.04	1.29	0.15	-0.15	0.18	0.22	0.03	-0.03
Alt My	-5.04	0.29	57.95	51.62	-0.92	-0.03	11.57	10.31
P148-Sag	GGGGGG	QQQQQQ	Q_Q_Q_	_Q_Q_Q	QQ_QQ_	_QQ_QQ	Q_QQ_Q	Zemin
N	183.61	12.09	(azaltma	Nq=	12.09x1.000 =	12.09)		0.00
Alt Mx	0.00	0.00	0.00	0.00	0.00	0.00	0.00	0.00
Alt My	0.24	0.04	0.02	0.01	0.02	0.03	0.02	0.00
(S118)	Deprem+X	Deprem-X	Deprem+Y	Deprem-Y	Rüzgar+X	Rüzgar-X	Rüzgar+Y	Rüzgar-Y
N	46.17	53.55	4.27	4.27	7.25	8.48	0.86	0.86
Alt Mx	1.04	1.29	0.15	-0.15	0.18	0.22	0.03	-0.03
Alt My	-5.04	0.29	57.95	51.62	-0.92	-0.03	11.57	10.31

STAAD VT1

FİRMA : | 03-23-2005

PROJE : perdeli sistem (perdeli.ST4)

TEMELLERE GELEN KOLON YÜKLERİ

P149-Sol	GGGGGG	QQQQQQ	Q_Q_Q_	_Q_Q_Q	QQ_QQ_	_QQ_QQ	Q_QQ_Q	Zemin
N	428.78	36.82	(azaltma	Nq=	36.82x1.000	=	36.82)	0.00
Alt Mx	0.00	0.00	0.00	0.00	0.00	0.00	0.00	0.00
Alt My	1.05	0.12	0.06	0.06	0.06	0.08	0.10	0.00
(S122)	Deprem+X	Deprem-X	Deprem+Y	Deprem-Y	Rüzgar+X	Rüzgar-X	Rüzgar+Y	Rüzgar-Y
N	90.26	88.05	14.57	16.23	13.46	13.23	2.63	2.96
Alt Mx	2.38	2.19	-0.11	0.11	0.41	0.38	-0.02	0.02
Alt My	-20.07	-0.07	142.20	118.46	-3.66	-0.20	28.10	23.37

P149-Sag	GGGGGG	QQQQQQ	Q_Q_Q_	_Q_Q_Q	QQ_QQ_	_QQ_QQ	Q_QQ_Q	Zemin
N	428.78	36.82	(azaltma	Nq=	36.82x1.000	=	36.82)	0.00
Alt Mx	0.00	0.00	0.00	0.00	0.00	0.00	0.00	0.00
Alt My	1.05	0.12	0.06	0.06	0.06	0.08	0.10	0.00
(S129)	Deprem+X	Deprem-X	Deprem+Y	Deprem-Y	Rüzgar+X	Rüzgar-X	Rüzgar+Y	Rüzgar-Y
N	90.26	88.05	14.57	16.23	13.46	13.23	2.63	2.96
Alt Mx	2.38	2.19	-0.11	0.11	0.41	0.38	-0.02	0.02
Alt My	-20.07	-0.07	142.20	118.46	-3.66	-0.20	28.10	23.37

P150-Sol	GGGGGG	QQQQQQ	Q_Q_Q_	_Q_Q_Q	QQ_QQ_	_QQ_QQ	Q_QQ_Q	Zemin
N	840.26	72.32	(azaltma	Nq=	72.32x1.000	=	72.32)	0.00
Alt Mx	0.00	0.00	0.00	0.00	0.00	0.00	0.00	0.00
Alt My	4.86	0.55	0.29	0.25	0.34	0.40	0.24	0.00
(S112)	Deprem+X	Deprem-X	Deprem+Y	Deprem-Y	Rüzgar+X	Rüzgar-X	Rüzgar+Y	Rüzgar-Y
N	166.97	166.82	178.29	178.11	24.52	24.47	30.12	30.06
Alt Mx	3.78	4.45	0.39	-0.39	0.64	0.75	0.08	-0.08
Alt My	-56.78	9.24	523.82	445.50	-10.41	0.66	101.59	85.98

P150-Sag	GGGGGG	QQQQQQ	Q_Q_Q_	_Q_Q_Q	QQ_QQ_	_QQ_QQ	Q_QQ_Q	Zemin
N	840.26	72.32	(azaltma	Nq=	72.32x1.000	=	72.32)	0.00
Alt Mx	0.00	0.00	0.00	0.00	0.00	0.00	0.00	0.00
Alt My	4.86	0.55	0.29	0.25	0.34	0.40	0.24	0.00
(S122)	Deprem+X	Deprem-X	Deprem+Y	Deprem-Y	Rüzgar+X	Rüzgar-X	Rüzgar+Y	Rüzgar-Y
N	166.97	166.82	178.29	178.11	24.52	24.47	30.12	30.06
Alt Mx	3.78	4.45	0.39	-0.39	0.64	0.75	0.08	-0.08
Alt My	-56.78	9.24	523.82	445.50	-10.41	0.66	101.59	85.98

P151-Sol	GGGGGG	QQQQQQ	Q_Q_Q_	_Q_Q_Q	QQ_QQ_	_QQ_QQ	Q_QQ_Q	Zemin
N	232.59	20.03	(azaltma	Nq=	20.03x1.000	=	20.03)	0.00
Alt Mx	0.00	0.00	0.00	0.00	0.00	0.00	0.00	0.00
Alt My	0.23	0.02	0.01	0.01	0.01	0.01	0.02	0.00
(S108)	Deprem+X	Deprem-X	Deprem+Y	Deprem-Y	Rüzgar+X	Rüzgar-X	Rüzgar+Y	Rüzgar-Y
N	44.05	46.94	96.40	99.82	6.40	6.87	16.30	16.97
Alt Mx	0.81	1.24	0.25	-0.25	0.13	0.21	0.05	-0.05
Alt My	-8.49	0.82	59.38	48.34	-1.56	0.01	11.86	9.68

P151-Sag	GGGGGG	QQQQQQ	Q_Q_Q_	_Q_Q_Q	QQ_QQ_	_QQ_QQ	Q_QQ_Q	Zemin
N	232.59	20.03	(azaltma	Nq=	20.03x1.000	=	20.03)	0.00
Alt Mx	0.00	0.00	0.00	0.00	0.00	0.00	0.00	0.00
Alt My	0.23	0.02	0.01	0.01	0.01	0.01	0.02	0.00
(S112)	Deprem+X	Deprem-X	Deprem+Y	Deprem-Y	Rüzgar+X	Rüzgar-X	Rüzgar+Y	Rüzgar-Y
N	44.05	46.94	96.40	99.82	6.40	6.87	16.30	16.97
Alt Mx	0.81	1.24	0.25	-0.25	0.13	0.21	0.05	-0.05
Alt My	-8.49	0.82	59.38	48.34	-1.56	0.01	11.86	9.68

P152-Sol	GGGGGG	QQQQQQ	Q_Q_Q_	_Q_Q_Q	QQ_QQ_	_QQ_QQ	Q_QQ_Q	Zemin
N	521.35	44.27	(azaltma	Nq=	44.27x1.000	=	44.27)	0.00
Alt Mx	0.00	0.00	0.00	0.00	0.00	0.00	0.00	0.00
Alt My	1.10	0.26	0.15	0.10	0.14	0.16	0.20	0.00
(S103)	Deprem+X	Deprem-X	Deprem+Y	Deprem-Y	Rüzgar+X	Rüzgar-X	Rüzgar+Y	Rüzgar-Y
N	111.38	110.93	344.84	344.32	16.58	16.49	59.98	59.86
Alt Mx	1.44	2.81	0.82	-0.82	0.23	0.46	0.16	-0.16
Alt My	-33.67	1.99	253.95	211.64	-6.15	-0.17	49.92	41.49

P152-Sag	GGGGGG	QQQQQQ	Q_Q_Q_	_Q_Q_Q	QQ_QQ_	_QQ_QQ	Q_QQ_Q	Zemin
N	521.35	44.27	(azaltma	Nq=	44.27x1.000	=	44.27)	0.00
Alt Mx	0.00	0.00	0.00	0.00	0.00	0.00	0.00	0.00
Alt My	1.10	0.26	0.15	0.10	0.14	0.16	0.20	0.00
(S108)	Deprem+X	Deprem-X	Deprem+Y	Deprem-Y	Rüzgar+X	Rüzgar-X	Rüzgar+Y	Rüzgar-Y
N	111.38	110.93	344.84	344.32	16.58	16.49	59.98	59.86
Alt Mx	1.44	2.81	0.82	-0.82	0.23	0.46	0.16	-0.16
Alt My	-33.67	1.99	253.95	211.64	-6.15	-0.17	49.92	41.49

P153-Sol	GGGGGG	QQQQQQ	Q_Q_Q_	_Q_Q_Q	QQ_QQ_	_QQ_QQ	Q_QQ_Q	Zemin
N	102.10	8.92	(azaltma	Nq=	8.92x1.000	=	8.92)	0.00
Alt Mx	0.00	0.00	0.00	0.00	0.00	0.00	0.00	0.00
Alt My	-0.04	0.01	0.01	0.00	0.00	0.00	0.01	0.00
(S140)	Deprem+X	Deprem-X	Deprem+Y	Deprem-Y	Rüzgar+X	Rüzgar-X	Rüzgar+Y	Rüzgar-Y
N	3.98	16.59	87.29	72.35	0.18	1.89	15.62	12.69
Alt Mx	0.82	0.47	-0.21	0.21	0.14	0.09	-0.04	0.04
Alt My	-7.72	0.41	33.11	23.46	-1.42	-0.05	6.65	4.73

P153-Sag	GGGGGG	QQQQQQ	Q_Q_Q_	_Q_Q_Q	QQ_QQ_	_QQ_QQ	Q_QQ_Q	Zemin
N	102.10	8.92	(azaltma	Nq=	8.92x1.000	=	8.92)	0.00
Alt Mx	0.00	0.00	0.00	0.00	0.00	0.00	0.00	0.00
Alt My	-0.04	0.01	0.01	0.00	0.00	0.00	0.01	0.00
(S144)	Deprem+X	Deprem-X	Deprem+Y	Deprem-Y	Rüzgar+X	Rüzgar-X	Rüzgar+Y	Rüzgar-Y
N	3.98	16.59	87.29	72.35	0.18	1.89	15.62	12.69
Alt Mx	0.82	0.47	-0.21	0.21	0.14	0.09	-0.04	0.04
Alt My	-7.72	0.41	33.11	23.46	-1.42	-0.05	6.65	4.73

STAA-CAD V11

FİRMA : 03-23-2005

PROJE : perdeli sistem (perdeli.ST4)

TEMELLERE GELEN KOLON YÜKLERİ

P154-Sol	GGGGGG	QQQQQQ	Q_Q_Q_	_Q_Q_Q	QQ_QQ_	_QQ_QQ	Q_QQ_Q	Zemin
N	696.07	61.05	(azaltma	Ng=	61.05x1.000 =	61.05)		0.00
Alt Mx	0.00	0.00	0.00	0.00	0.00	0.00	0.00	0.00
Alt My	4.35	0.41	0.19	0.23	0.32	0.26	0.25	0.00
(S125)	Deprem+X	Deprem-X	Deprem+Y	Deprem-Y	Rüzgar+X	Rüzgar-X	Rüzgar+Y	Rüzgar-Y
N	59.65	113.36	396.04	332.45	4.41	13.24	69.08	56.63
Alt Mx	5.21	3.30	-1.14	1.14	0.92	0.59	-0.23	0.23
Alt My	-73.51	2.47	349.97	259.82	-13.38	-0.66	68.55	50.61

P154-Sag	GGGGGG	QQQQQQ	Q_Q_Q_	_Q_Q_Q	QQ_QQ_	_QQ_QQ	Q_QQ_Q	Zemin
N	696.07	61.05	(azaltma	Ng=	61.05x1.000 =	61.05)		0.00
Alt Mx	0.00	0.00	0.00	0.00	0.00	0.00	0.00	0.00
Alt My	4.35	0.41	0.19	0.23	0.32	0.26	0.25	0.00
(S140)	Deprem+X	Deprem-X	Deprem+Y	Deprem-Y	Rüzgar+X	Rüzgar-X	Rüzgar+Y	Rüzgar-Y
N	59.65	113.36	396.04	332.45	4.41	13.24	69.08	56.63
Alt Mx	5.21	3.30	-1.14	1.14	0.92	0.59	-0.23	0.23
Alt My	-73.51	2.47	349.97	259.82	-13.38	-0.66	68.55	50.61

P155-Sol	GGGGGG	QQQQQQ	Q_Q_Q_	_Q_Q_Q	QQ_QQ_	_QQ_QQ	Q_QQ_Q	Zemin
N	757.04	66.44	(azaltma	Ng=	66.44x1.000 =	66.44)		0.00
Alt Mx	0.00	0.00	0.00	0.00	0.00	0.00	0.00	0.00
Alt My	4.22	0.47	0.24	0.12	0.19	0.39	0.33	0.00
(S130)	Deprem+X	Deprem-X	Deprem+Y	Deprem-Y	Rüzgar+X	Rüzgar-X	Rüzgar+Y	Rüzgar-Y
N	155.75	167.13	164.82	151.35	20.59	22.47	27.39	24.73
Alt Mx	4.88	3.73	-0.68	0.68	0.85	0.66	-0.14	0.14
Alt My	-107.14	-12.27	419.62	307.08	-19.38	-3.50	81.85	58.47

P155-Sag	GGGGGG	QQQQQQ	Q_Q_Q_	_Q_Q_Q	QQ_QQ_	_QQ_QQ	Q_QQ_Q	Zemin
N	757.04	66.44	(azaltma	Ng=	66.44x1.000 =	66.44)		0.00
Alt Mx	0.00	0.00	0.00	0.00	0.00	0.00	0.00	0.00
Alt My	4.22	0.47	0.24	0.12	0.19	0.39	0.33	0.00
(S135)	Deprem+X	Deprem-X	Deprem+Y	Deprem-Y	Rüzgar+X	Rüzgar-X	Rüzgar+Y	Rüzgar-Y
N	155.75	167.13	164.82	151.35	20.59	22.47	27.39	24.73
Alt Mx	4.88	3.73	-0.68	0.68	0.85	0.66	-0.14	0.14
Alt My	-107.14	-12.27	419.62	307.08	-19.38	-3.50	81.85	58.47

P161-Sol	GGGGGG	QQQQQQ	Q_Q_Q_	_Q_Q_Q	QQ_QQ_	_QQ_QQ	Q_QQ_Q	Zemin
N	376.20	32.07	(azaltma	Ng=	32.07x1.000 =	32.07)		0.00
Alt Mx	-0.18	-0.03	-0.02	-0.01	-0.02	-0.03	-0.01	0.00
Alt My	0.00	0.00	0.00	0.00	0.00	0.00	0.00	0.00
(S119)	Deprem+X	Deprem-X	Deprem+Y	Deprem-Y	Rüzgar+X	Rüzgar-X	Rüzgar+Y	Rüzgar-Y
N	55.50	54.30	35.54	36.96	8.33	8.13	6.51	6.79
Alt Mx	81.16	80.73	-1.30	-0.80	13.65	13.58	-0.27	-0.17
Alt My	0.27	-0.02	2.40	2.74	0.05	0.00	0.48	0.55

P161-Sag	GGGGGG	QQQQQQ	Q_Q_Q_	_Q_Q_Q	QQ_QQ_	_QQ_QQ	Q_QQ_Q	Zemin
N	376.20	32.07	(azaltma	Ng=	32.07x1.000 =	32.07)		0.00
Alt Mx	-0.18	-0.03	-0.02	-0.01	-0.02	-0.03	-0.01	0.00
Alt My	0.00	0.00	0.00	0.00	0.00	0.00	0.00	0.00
(S120)	Deprem+X	Deprem-X	Deprem+Y	Deprem-Y	Rüzgar+X	Rüzgar-X	Rüzgar+Y	Rüzgar-Y
N	55.50	54.30	35.54	36.96	8.33	8.13	6.51	6.79
Alt Mx	81.16	80.73	-1.30	-0.80	13.65	13.58	-0.27	-0.17
Alt My	0.27	-0.02	2.40	2.74	0.05	0.00	0.48	0.55

P162-Sol	GGGGGG	QQQQQQ	Q_Q_Q_	_Q_Q_Q	QQ_QQ_	_QQ_QQ	Q_QQ_Q	Zemin
N	375.99	31.84	(azaltma	Ng=	31.84x1.000 =	31.84)		0.00
Alt Mx	0.00	0.00	0.00	0.00	0.01	0.00	0.00	0.00
Alt My	0.00	0.00	0.00	0.00	0.00	0.00	0.00	0.00
(S120)	Deprem+X	Deprem-X	Deprem+Y	Deprem-Y	Rüzgar+X	Rüzgar-X	Rüzgar+Y	Rüzgar-Y
N	0.01	0.01	49.12	49.12	0.00	0.00	9.30	9.30
Alt Mx	81.53	81.03	-0.20	0.29	13.71	13.62	-0.06	0.06
Alt My	0.00	0.00	2.58	2.58	0.00	0.00	0.52	0.52

P162-Sag	GGGGGG	QQQQQQ	Q_Q_Q_	_Q_Q_Q	QQ_QQ_	_QQ_QQ	Q_QQ_Q	Zemin
N	375.99	31.84	(azaltma	Ng=	31.84x1.000 =	31.84)		0.00
Alt Mx	0.00	0.00	0.00	0.00	0.01	0.00	0.00	0.00
Alt My	0.00	0.00	0.00	0.00	0.00	0.00	0.00	0.00
(S121)	Deprem+X	Deprem-X	Deprem+Y	Deprem-Y	Rüzgar+X	Rüzgar-X	Rüzgar+Y	Rüzgar-Y
N	0.01	0.01	49.12	49.12	0.00	0.00	9.30	9.30
Alt Mx	81.53	81.03	-0.20	0.29	13.71	13.62	-0.06	0.06
Alt My	0.00	0.00	2.58	2.58	0.00	0.00	0.52	0.52

P163-Sol	GGGGGG	QQQQQQ	Q_Q_Q_	_Q_Q_Q	QQ_QQ_	_QQ_QQ	Q_QQ_Q	Zemin
N	376.19	32.07	(azaltma	Ng=	32.07x1.000 =	32.07)		0.00
Alt Mx	0.18	0.03	0.02	0.01	0.03	0.02	0.01	0.00
Alt My	0.00	0.00	0.00	0.00	0.00	0.00	0.00	0.00
(S123)	Deprem+X	Deprem-X	Deprem+Y	Deprem-Y	Rüzgar+X	Rüzgar-X	Rüzgar+Y	Rüzgar-Y
N	55.48	54.29	36.96	35.54	8.33	8.13	6.79	6.51
Alt Mx	81.16	80.73	0.80	1.30	13.65	13.58	0.17	0.27
Alt My	-0.27	0.02	2.74	2.40	-0.05	0.00	0.55	0.48

P163-Sag	GGGGGG	QQQQQQ	Q_Q_Q_	_Q_Q_Q	QQ_QQ_	_QQ_QQ	Q_QQ_Q	Zemin
N	376.19	32.07	(azaltma	Ng=	32.07x1.000 =	32.07)		0.00
Alt Mx	0.18	0.03	0.02	0.01	0.03	0.02	0.01	0.00
Alt My	0.00	0.00	0.00	0.00	0.00	0.00	0.00	0.00
(S122)	Deprem+X	Deprem-X	Deprem+Y	Deprem-Y	Rüzgar+X	Rüzgar-X	Rüzgar+Y	Rüzgar-Y
N	55.48	54.29	36.96	35.54	8.33	8.13	6.79	6.51
Alt Mx	81.16	80.73	0.80	1.20	13.65	13.58	0.17	0.27
Alt My	-0.27	0.02	2.74	2.40	-0.05	0.00	0.55	0.48

TOPLAM Ng= 35704.34 Ng= 2660.36

3.1.2 Perdeli Taşıyıcı Sistemin Metrajı

Kat	Beton m^3	Kalıp m^2
1.kat Döşeme	140.44	540.16
1.kat Kiriş	274.05	1126.39
1.kat Kolon	56.03	194.45
1.kat Toplam	470.52	1860.99
2.kat Döşeme	140.44	540.16
2.kat Kiriş	274.05	1126.39
2.kat Kolon	56.03	194.45
2.kat Toplam	470.52	1860.99
3.kat Döşeme	140.44	540.16
3.kat Kiriş	274.05	1126.39
3.kat Kolon	56.03	194.45
3.kat Toplam	470.52	1860.99
4.kat Döşeme	140.44	540.16
4.kat Kiriş	274.05	1126.39
4.kat Kolon	56.03	194.45
4.kat Toplam	470.52	1860.99
5.kat Döşeme	140.44	540.16
5.kat Kiriş	274.05	1126.39
5.kat Kolon	56.03	194.45
5.kat Toplam	470.52	1860.99
6.kat Döşeme	140.44	540.16
6.kat Kiriş	274.05	1126.39
6.kat Kolon	56.03	194.45
6.kat Toplam	470.52	1860.99
7.kat Döşeme	140.44	540.16
7.kat Kiriş	274.05	1126.39
7.kat Kolon	56.03	194.45
7.kat Toplam	470.52	1860.99
8.kat Döşeme	140.44	540.16
8.kat Kiriş	274.05	1126.39
8.kat Kolon	56.03	194.45
8.kat Toplam	470.52	1860.99
9.kat Döşeme	140.44	540.16
9.kat Kiriş	274.05	1126.39
9.kat Kolon	56.03	194.45
9.kat Toplam	470.52	1860.99
10.kat Döşeme	140.44	540.16
10.kat Kiriş	274.05	1126.39
10.kat Kolon	56.03	194.45
10.kat Toplam	470.52	1860.99
11.kat Döşeme	140.44	540.16
11.kat Kiriş	274.05	1126.39
11.kat Kolon	56.03	194.45
11.kat Toplam	470.52	1860.99
12.kat Döşeme	140.44	540.16
12.kat Kiriş	274.05	1126.39
12.kat Kolon	56.03	194.45
12.kat Toplam	470.52	1860.99
13.kat Döşeme	140.44	540.16
13.kat Kiriş	274.05	1126.39
13.kat Kolon	56.03	194.45
13.kat Toplam	470.52	1860.99
14.kat Döşeme	140.44	540.16
14.kat Kiriş	274.05	1126.39
14.kat Kolon	56.03	194.45
14.kat Toplam	470.52	1860.99
15.kat Döşeme	140.44	540.16
15.kat Kiriş	274.05	1126.39
15.kat Kolon	56.03	194.45

15.kat Toplam	470.52	1860.99
16.kat Döşeme	140.44	540.16
16.kat Kiriş	274.05	1126.39
16.kat Kolon	56.03	194.45
16.kat Toplam	470.52	1860.99
17.kat Döşeme	140.44	540.16
17.kat Kiriş	274.05	1126.39
17.kat Kolon	56.03	194.45
17.kat Toplam	470.52	1860.99
18.kat Döşeme	140.44	540.16
18.kat Kiriş	274.05	1126.39
18.kat Kolon	56.03	194.45
18.kat Toplam	470.52	1860.99
19.kat Döşeme	140.44	540.16
19.kat Kiriş	274.05	1126.39
19.kat Kolon	56.03	194.45
19.kat Toplam	470.52	1860.99
20.kat Döşeme	140.44	540.16
20.kat Kiriş	274.05	1126.39
20.kat Kolon	56.03	194.45
20.kat Toplam	470.52	1860.99
21.kat Döşeme	140.44	540.16
21.kat Kiriş	274.05	1126.39
21.kat Kolon	56.03	194.45
21.kat Toplam	470.52	1860.99
22.kat Döşeme	140.44	540.16
22.kat Kiriş	274.05	1126.39
22.kat Kolon	56.03	194.45
22.kat Toplam	470.52	1860.99
23.kat Döşeme	140.44	540.16
23.kat Kiriş	274.05	1126.39
23.kat Kolon	56.03	194.45
23.kat Toplam	470.52	1860.99
24.kat Döşeme	140.44	540.16
24.kat Kiriş	274.05	1126.39
24.kat Kolon	56.03	194.45
24.kat Toplam	470.52	1860.99
25.kat Döşeme	140.44	540.16
25.kat Kiriş	274.05	1126.39
25.kat Kolon	56.03	194.45
25.kat Toplam	470.52	1860.99
26.kat Döşeme	140.44	540.16
26.kat Kiriş	274.05	1126.39
26.kat Kolon	56.03	194.45
26.kat Toplam	470.52	1860.99
27.kat Döşeme	140.44	540.16
27.kat Kiriş	274.05	1126.39
27.kat Kolon	56.03	194.45
27.kat Toplam	470.52	1860.99
28.kat Döşeme	140.44	540.16
28.kat Kiriş	274.05	1126.39
28.kat Kolon	56.03	194.45
28.kat Toplam	470.52	1860.99
29.kat Döşeme	140.44	540.16
29.kat Kiriş	274.05	1126.39
29.kat Kolon	56.03	194.45
29.kat Toplam	470.52	1860.99
30.kat Döşeme	140.44	540.16
30.kat Kiriş	274.05	1126.39
30.kat Kolon	56.03	194.45
30.kat Toplam	470.52	1860.99
31.kat Döşeme	140.44	540.16

31.kat Kiriş	274.05	1126.39
31.kat Kolon	56.03	194.45
31.kat Toplam	470.52	1860.99
32.kat Döşeme	140.44	540.16
32.kat Kiriş	274.05	1126.39
32.kat Kolon	56.03	194.45
32.kat Toplam	470.52	1860.99
33.kat Döşeme	140.44	540.16
33.kat Kiriş	274.05	1126.39
33.kat Kolon	56.03	194.45
33.kat Toplam	470.52	1860.99
34.kat Döşeme	140.44	540.16
34.kat Kiriş	274.05	1126.39
34.kat Kolon	56.03	194.45
34.kat Toplam	470.52	1860.99
35.kat Döşeme	140.44	540.16
35.kat Kiriş	274.05	1126.39
35.kat Kolon	56.03	194.45
35.kat Toplam	470.52	1860.99
36.kat Döşeme	140.44	540.16
36.kat Kiriş	274.05	1126.39
36.kat Kolon	56.03	194.45
36.kat Toplam	470.52	1860.99
37.kat Döşeme	140.44	540.16
37.kat Kiriş	274.05	1126.39
37.kat Kolon	56.03	194.45
37.kat Toplam	470.52	1860.99
38.kat Döşeme	140.44	540.16
38.kat Kiriş	274.05	1126.39
38.kat Kolon	56.03	194.45
38.kat Toplam	470.52	1860.99
39.kat Döşeme	140.44	540.16
39.kat Kiriş	274.05	1126.39
39.kat Kolon	56.03	194.45
39.kat Toplam	470.52	1860.99
40.kat Döşeme	140.44	540.16
40.kat Kiriş	274.05	1126.39
40.kat Kolon	56.03	194.45
40.kat Toplam	470.52	1860.99

Kat no	ø10 kg	ø12 kg	ø14 kg	ø16 kg	ø20 kg	ø22 kg	TOPLAM kg
1.kat Döşeme	0.0	5293.5	484.3	0.0	0.0	0.0	5777.7
1.kat Kiriş	2229.3	0.0	622.3	1010.9	1224.5	12.5	5099.5
1.kat Kolon	1395.3	6634.8	0.0	7248.7	6072.5	0.0	21351.3
1.kat Toplamı	3624.7	11928.3	1106.5	8259.5	7297.0	12.5	32228.6
2.kat Döşeme	0.0	5347.3	445.5	0.0	0.0	0.0	5792.8
2.kat Kiriş	2229.3	0.0	622.3	896.4	1343.7	12.5	5104.3
2.kat Kolon	1395.3	6634.8	0.0	7248.7	6072.5	0.0	21351.3
2.kat Toplamı	3624.7	11982.2	1067.7	8145.1	7416.2	12.5	32248.4
3.kat Döşeme	0.0	5347.3	445.5	0.0	0.0	0.0	5792.8
3.kat Kiriş	2229.3	0.0	622.3	962.7	1274.7	12.5	5101.5
3.kat Kolon	1395.3	6634.8	0.0	7248.7	6072.5	0.0	21351.3
3.kat Toplamı	3624.7	11982.2	1067.7	8211.3	7347.2	12.5	32245.6
4.kat Döşeme	0.0	5347.3	445.5	0.0	0.0	0.0	5792.8
4.kat Kiriş	2229.3	0.0	622.3	1028.9	1205.7	12.5	5098.8
4.kat Kolon	1395.3	6634.8	0.0	7248.7	6072.5	0.0	21351.3
4.kat Toplamı	3624.7	11982.2	1067.7	8277.6	7278.2	12.5	32242.9
5.kat Döşeme	0.0	5347.3	445.5	0.0	0.0	0.0	5792.8
5.kat Kiriş	2229.3	0.0	622.3	1028.9	1205.7	12.5	5098.8
5.kat Kolon	1395.3	6634.8	0.0	7248.7	6072.5	0.0	21351.3

5.kat Toplamı	3624.7	11982.2	1067.7	8277.6	7278.2	12.5	32242.9
6.kat Döşeme	0.0	5347.3	445.5	0.0	0.0	0.0	5792.8
6.kat Kiriş	2229.3	0.0	622.3	1028.9	1205.7	12.5	5098.8
6.kat Kolon	1395.3	6634.8	0.0	7248.7	6072.5	0.0	21351.3
6.kat Toplamı	3624.7	11982.2	1067.7	8277.6	7278.2	12.5	32242.9
7.kat Döşeme	0.0	5347.3	445.5	0.0	0.0	0.0	5792.8
7.kat Kiriş	2229.3	0.0	622.3	1028.9	1205.7	12.5	5098.8
7.kat Kolon	1395.3	6634.8	0.0	7248.7	6072.5	0.0	21351.3
7.kat Toplamı	3624.7	11982.2	1067.7	8277.6	7278.2	12.5	32242.9
8.kat Döşeme	0.0	5347.3	445.5	0.0	0.0	0.0	5792.8
8.kat Kiriş	2229.3	0.0	622.3	1161.5	1067.6	12.5	5093.3
8.kat Kolon	1395.3	6634.8	0.0	7248.7	6072.5	0.0	21351.3
8.kat Toplamı	3624.7	11982.2	1067.7	8410.2	7140.1	12.5	32237.4
9.kat Döşeme	0.0	5347.3	445.5	0.0	0.0	0.0	5792.8
9.kat Kiriş	2229.3	0.0	622.3	1161.5	1067.6	12.5	5093.3
9.kat Kolon	1395.3	6634.8	0.0	7248.7	6072.5	0.0	21351.3
9.kat Toplamı	3624.7	11982.2	1067.7	8410.2	7140.1	12.5	32237.4
10.kat Döşeme	0.0	5347.3	445.5	0.0	0.0	0.0	5792.8
10.kat Kiriş	2229.3	0.0	622.3	1161.5	1067.6	12.5	5093.3
10.kat Kolon	1395.3	6634.8	0.0	7248.7	6072.5	0.0	21351.3
10.kat Toplamı	3624.7	11982.2	1067.7	8410.2	7140.1	12.5	32237.4
11.kat Döşeme	0.0	5347.3	445.5	0.0	0.0	0.0	5792.8
11.kat Kiriş	2229.3	0.0	622.3	1161.5	1067.6	12.5	5093.3
11.kat Kolon	1395.3	6634.8	0.0	7248.7	6072.5	0.0	21351.3
11.kat Toplamı	3624.7	11982.2	1067.7	8410.2	7140.1	12.5	32237.4
12.kat Döşeme	0.0	5347.3	445.5	0.0	0.0	0.0	5792.8
12.kat Kiriş	2229.3	0.0	622.3	1161.5	1067.6	12.5	5093.3
12.kat Kolon	1395.3	6634.8	0.0	7248.7	6072.5	0.0	21351.3
12.kat Toplamı	3624.7	11982.2	1067.7	8410.2	7140.1	12.5	32237.4
13.kat Döşeme	0.0	5347.3	445.5	0.0	0.0	0.0	5792.8
13.kat Kiriş	2229.3	0.0	622.3	1161.5	1067.6	12.5	5093.3
13.kat Kolon	1395.3	6634.8	0.0	7248.7	6072.5	0.0	21351.3
13.kat Toplamı	3624.7	11982.2	1067.7	8410.2	7140.1	12.5	32237.4
14.kat Döşeme	0.0	5347.3	445.5	0.0	0.0	0.0	5792.8
14.kat Kiriş	2229.3	0.0	622.3	1161.5	1067.6	12.5	5093.3
14.kat Kolon	1395.3	6634.8	0.0	7248.7	6072.5	0.0	21351.3
14.kat Toplamı	3624.7	11982.2	1067.7	8410.2	7140.1	12.5	32237.4
15.kat Döşeme	0.0	5347.3	445.5	0.0	0.0	0.0	5792.8
15.kat Kiriş	2229.3	0.0	622.3	1161.5	1067.6	12.5	5093.3
15.kat Kolon	1395.3	6634.8	0.0	7248.7	6072.5	0.0	21351.3
15.kat Toplamı	3624.7	11982.2	1067.7	8410.2	7140.1	12.5	32237.4
16.kat Döşeme	0.0	5347.3	445.5	0.0	0.0	0.0	5792.8
16.kat Kiriş	2229.3	0.0	622.3	1161.5	1067.6	12.5	5093.3
16.kat Kolon	1395.3	6634.8	0.0	7248.7	6072.5	0.0	21351.3
16.kat Toplamı	3624.7	11982.2	1067.7	8410.2	7140.1	12.5	32237.4
17.kat Döşeme	0.0	5347.3	445.5	0.0	0.0	0.0	5792.8
17.kat Kiriş	2229.3	0.0	622.3	1161.5	1067.6	12.5	5093.3
17.kat Kolon	1395.3	6634.8	0.0	7248.7	6072.5	0.0	21351.3
17.kat Toplamı	3624.7	11982.2	1067.7	8410.2	7140.1	12.5	32237.4
18.kat Döşeme	0.0	5347.3	445.5	0.0	0.0	0.0	5792.8
18.kat Kiriş	2229.3	0.0	622.3	1161.5	1067.6	12.5	5093.3
18.kat Kolon	1395.3	6634.8	0.0	7248.7	6072.5	0.0	21351.3
18.kat Toplamı	3624.7	11982.2	1067.7	8410.2	7140.1	12.5	32237.4
19.kat Döşeme	0.0	5347.3	445.5	0.0	0.0	0.0	5792.8
19.kat Kiriş	2229.3	0.0	622.3	1161.5	1067.6	12.5	5093.3
19.kat Kolon	1395.3	6634.8	0.0	7248.7	6072.5	0.0	21351.3
19.kat Toplamı	3624.7	11982.2	1067.7	8410.2	7140.1	12.5	32237.4
20.kat Döşeme	0.0	5347.3	445.5	0.0	0.0	0.0	5792.8
20.kat Kiriş	2229.3	0.0	622.3	1161.5	1067.6	12.5	5093.3
20.kat Kolon	1395.3	6634.8	0.0	7248.7	6072.5	0.0	21351.3
20.kat Toplamı	3624.7	11982.2	1067.7	8410.2	7140.1	12.5	32237.4

21.kat Döşeme	0.0	5347.3	445.5	0.0	0.0	0.0	5792.8
21.kat Kiriş	2229.3	0.0	622.3	1161.5	1067.6	12.5	5093.3
21.kat Kolon	1395.3	6634.8	0.0	7248.7	6072.5	0.0	21351.3
21.kat Toplamı	3624.7	11982.2	1067.7	8410.2	7140.1	12.5	32237.4
22.kat Döşeme	0.0	5347.3	445.5	0.0	0.0	0.0	5792.8
22.kat Kiriş	2229.3	0.0	622.3	1161.5	1067.6	12.5	5093.3
22.kat Kolon	1395.3	6634.8	0.0	7248.7	6072.5	0.0	21351.3
22.kat Toplamı	3624.7	11982.2	1067.7	8410.2	7140.1	12.5	32237.4
23.kat Döşeme	0.0	5347.3	445.5	0.0	0.0	0.0	5792.8
23.kat Kiriş	2229.3	0.0	622.3	1161.5	1067.6	12.5	5093.3
23.kat Kolon	1395.3	6634.8	0.0	7248.7	6072.5	0.0	21351.3
23.kat Toplamı	3624.7	11982.2	1067.7	8410.2	7140.1	12.5	32237.4
24.kat Döşeme	0.0	5347.3	445.5	0.0	0.0	0.0	5792.8
24.kat Kiriş	2229.3	0.0	622.3	1161.5	1067.6	12.5	5093.3
24.kat Kolon	1395.3	6634.8	0.0	7248.7	6072.5	0.0	21351.3
24.kat Toplamı	3624.7	11982.2	1067.7	8410.2	7140.1	12.5	32237.4
25.kat Döşeme	0.0	5347.3	445.5	0.0	0.0	0.0	5792.8
25.kat Kiriş	2229.3	0.0	622.3	1161.5	1067.6	12.5	5093.3
25.kat Kolon	1395.3	6634.8	0.0	7248.7	6072.5	0.0	21351.3
25.kat Toplamı	3624.7	11982.2	1067.7	8410.2	7140.1	12.5	32237.4
26.kat Döşeme	0.0	5347.3	445.5	0.0	0.0	0.0	5792.8
26.kat Kiriş	2229.3	0.0	622.3	1294.1	929.5	12.5	5087.7
26.kat Kolon	1395.3	6634.8	0.0	7248.7	6072.5	0.0	21351.3
26.kat Toplamı	3624.7	11982.2	1067.7	8542.7	7002.0	12.5	32231.8
27.kat Döşeme	0.0	5347.3	445.5	0.0	0.0	0.0	5792.8
27.kat Kiriş	2229.3	0.0	622.3	1426.6	791.5	12.5	5082.2
27.kat Kolon	1395.3	6634.8	0.0	7248.7	6072.5	0.0	21351.3
27.kat Toplamı	3624.7	11982.2	1067.7	8675.2	6864.0	12.5	32226.3
28.kat Döşeme	0.0	5347.3	445.5	0.0	0.0	0.0	5792.8
28.kat Kiriş	2229.3	0.0	622.3	1426.6	791.5	12.5	5082.2
28.kat Kolon	1395.3	6634.8	0.0	7248.7	6072.5	0.0	21351.3
28.kat Toplamı	3624.7	11982.2	1067.7	8675.2	6864.0	12.5	32226.3
29.kat Döşeme	0.0	5347.3	445.5	0.0	0.0	0.0	5792.8
29.kat Kiriş	2229.3	0.0	622.3	1426.6	791.5	12.5	5082.2
29.kat Kolon	1395.3	6634.8	0.0	7248.7	6072.5	0.0	21351.3
29.kat Toplamı	3624.7	11982.2	1067.7	8675.2	6864.0	12.5	32226.3
30.kat Döşeme	0.0	5347.3	445.5	0.0	0.0	0.0	5792.8
30.kat Kiriş	2229.3	0.0	622.3	1426.6	791.5	12.5	5082.2
30.kat Kolon	1395.3	6634.8	0.0	7248.7	6072.5	0.0	21351.3
30.kat Toplamı	3624.7	11982.2	1067.7	8675.2	6864.0	12.5	32226.3
31.kat Döşeme	0.0	5347.3	445.5	0.0	0.0	0.0	5792.8
31.kat Kiriş	2229.3	0.0	622.3	1426.6	791.5	12.5	5082.2
31.kat Kolon	1395.3	6634.8	0.0	7248.7	6072.5	0.0	21351.3
31.kat Toplamı	3624.7	11982.2	1067.7	8675.2	6864.0	12.5	32226.3
32.kat Döşeme	0.0	5347.3	445.5	0.0	0.0	0.0	5792.8
32.kat Kiriş	2229.3	0.0	622.3	1426.6	791.5	12.5	5082.2
32.kat Kolon	1395.3	6634.8	0.0	7248.7	6072.5	0.0	21351.3
32.kat Toplamı	3624.7	11982.2	1067.7	8675.2	6864.0	12.5	32226.3
33.kat Döşeme	0.0	5347.3	445.5	0.0	0.0	0.0	5792.8
33.kat Kiriş	2229.3	0.0	622.3	1426.6	791.5	12.5	5082.2
33.kat Kolon	1395.3	6634.8	0.0	7248.7	6072.5	0.0	21351.3
33.kat Toplamı	3624.7	11982.2	1067.7	8675.2	6864.0	12.5	32226.3
34.kat Döşeme	0.0	5347.3	445.5	0.0	0.0	0.0	5792.8
34.kat Kiriş	2229.3	0.0	622.3	1426.6	791.5	12.5	5082.2
34.kat Kolon	1395.3	6634.8	0.0	7248.7	6072.5	0.0	21351.3
34.kat Toplamı	3624.7	11982.2	1067.7	8675.2	6864.0	12.5	32226.3
35.kat Döşeme	0.0	5347.3	445.5	0.0	0.0	0.0	5792.8
35.kat Kiriş	2229.3	0.0	622.3	1426.6	791.5	12.5	5082.2
35.kat Kolon	1395.3	6634.8	0.0	7248.7	6072.5	0.0	21351.3
35.kat Toplamı	3624.7	11982.2	1067.7	8675.2	6864.0	12.5	32226.3
36.kat Döşeme	0.0	5347.3	445.5	0.0	0.0	0.0	5792.8
36.kat Kiriş	2229.3	0.0	622.3	1426.6	791.5	12.5	5082.2
36.kat Kolon	1395.3	6634.8	0.0	7248.7	6072.5	0.0	21351.3

36.kat Toplamı	3624.7	11982.2	1067.7	8675.2	6864.0	12.5	32226.3
37.kat Döşeme	0.0	5347.3	445.5	0.0	0.0	0.0	5792.8
37.kat Kiriş	2229.3	0.0	622.3	1426.6	791.5	12.5	5082.2
37.kat Kolon	1395.3	6634.8	0.0	7248.7	6072.5	0.0	21351.3
37.kat Toplamı	3624.7	11982.2	1067.7	8675.2	6864.0	12.5	32226.3
38.kat Döşeme	0.0	5347.3	445.5	0.0	0.0	0.0	5792.8
38.kat Kiriş	2229.3	0.0	622.3	1426.6	791.5	12.5	5082.2
38.kat Kolon	1395.3	6634.8	0.0	7248.7	6072.5	0.0	21351.3
38.kat Toplamı	3624.7	11982.2	1067.7	8675.2	6864.0	12.5	32226.3
39.kat Döşeme	0.0	5347.3	445.5	0.0	0.0	0.0	5792.8
39.kat Kiriş	2229.3	0.0	622.3	1426.6	791.5	12.5	5082.2
39.kat Kolon	1395.3	6634.8	0.0	7248.7	6072.5	0.0	21351.3
39.kat Toplamı	3624.7	11982.2	1067.7	8675.2	6864.0	12.5	32226.3
40.kat Döşeme	0.0	5347.3	445.5	0.0	0.0	0.0	5792.8
40.kat Kiriş	2229.3	0.0	622.3	1541.0	672.3	12.5	5077.5
40.kat Kolon	1395.3	6634.8	0.0	7248.7	6072.5	0.0	21351.3
40.kat Toplamı	3624.7	11982.2	1067.7	8789.6	6744.8	12.5	32221.5
TOPLAM	144986.4	479232.2	42748.3	339219.1	282673.9	501.9	

3.2 Kolon- Kiriş Sistemli Bir Taşıyıcının Bilgisayar Programı (STA4-CAD) ile Hesaplanması

3.2.1 Kolon - Kiriş Taşıyıcılı Sistemin Statik ve Betonarme Analiz sonuçları

3.2.2 Kolon -Kiriş Taşıyıcılı Sistemin Metrajı

3.2.1 Kolon-Kiriş Taşıyıcı Sistemin Statik ve Betonarme Analiz sonuçları

STA4-CAD V11

FİRMA :	03-23-2005
PROJE : kolonlukirişlisistem	(kolonlukirişlisistem.ST4)

STA4-CAD
STructural Analysis FOR Computer Aided Design
VERSION 11.0
Copyright (C) 2003

SERDAR AMASRALI
STA MÜH. MÜŞ. LTD. ŞTİ.

STA4 programı, çok katlı betonarme yapıların 3 boyutlu analizini ve entegre olarak çizimlerini yapan entegre paket programdır. Yapının tümü için global stiffnes matrisi bir defada kurulur ve bloklama tekniği ile deplasmanlar bulunur. Kat düzlemindeki plakların yatay düzlemde sonsuz rijitliğini dikkate alarak, kat düzlemindeki dx,dy,qz deplasmanlarý için her katta 3 bilinmeyen, eleman uçlarında dz, dy, qx deplasmanları için her noktada 3 bilinmeyen kullanarak bir noktada 6 serbestlikli betonarme yapıluza özgün stiffnes matrisi ile çözülmektedir. Kiriş ve kolon elemanlarında kayma deformasyonları ile burulma etkileri dikkate alınmaktadır.
Denklem takımını; çözümünün hızlı olabilmesi için uç nokta numaraları, program tarafından nokta optimizasyonu ile minimum hafızada çözecek şekilde düzenlenir. Yapı+temel birlikte çözülebilmekte olup, temel stiffnes matrisleri winkler hipotezi ile kurulmaktadır.

Global stiffnes matrisinde dikkate alınan hususlar:
-Kirişlerin kolon ve perdelere içindeki kısımları, sonsuz rijit alınarak yük ve rijitlik matrislerinin düzenlenmesi.
-Geniş perdelere zayıf yönde saplanan kirişlerin, fiktif kolon kontrollu elastik mukayese olarak çözümü.
-Geniş perdelere rijitliği yönünde saplanan kirişlerde, kayma deformasyonların dikkate alınması.
-Altındaki kolon ile statik eksenlerinde kaçıklık olan kolonlarda, eksenel yük eksantrikliğinin stiffnes matrisinde dikkate alınması
-Dinamik analizde; CQC(Complete Quadratic Combination) metodu ile %5 sönüm yüzdesine göre kuvvetlerin bulunması.

STATİK ANALİZ YÜK KOMBİNASYON NOTASYONLARI:
1. G+G+G+G+G : Genel ölü yük
2. Q+Q+Q+Q+Q : 1. Genel hareketli yük
3. Q+o+Q+o+Q : 2. Hareketli yük
4. o+Q+o+Q+o : 3. Hareketli yük
5. Q+Q+o+Q+Q : 4. Hareketli yük
6. o+Q+Q+o+Q : 5. Hareketli yük
7. Q+o+Q+Q+o : 6. Hareketli yük
8. Gz : Yatay zemin itkisi
9. Ex + %5 x ey : X yönü deprem + %5 eksantrisite
10. Ex - %5 x ey : X yönü deprem - %5 eksantrisite
11. Ey + %5 x ex : Y yönü deprem + %5 eksantrisite
12. Ey - %5 x ex : Y yönü deprem - %5 eksantrisite
13. Wx + %5 x ey : X yönü rüzgar + %5 eksantrisite
14. Wx - %5 x ey : X yönü rüzgar - %5 eksantrisite
15. Wy + %5 x ex : Y yönü rüzgar + %5 eksantrisite
16. Wy - %5 x ex : Y yönü rüzgar - %5 eksantrisite

Programda kullanılan standartlar :
1 - Afet Bölgelerinde Yapılacak Yapılar Hakkında Yönetmelik (1997)
2 - TS. 498 hareketli ve rüzgar yükü standardı.
3 - TS. 500 betonarme yapıların hesap standardı.
4 - ACI CODE 318 iki yönlü kirişsiz plakların hesabı ve yük kombinasyonu.
5 - EUROCODE yük kombinasyonu.
6 - SNIP CODE yük kombinasyonu.
7 - ACI318-99,UBC97 CODE

STA4-CAD V11

FİRMA :	03-23-2005	
PROJE : kolonlukirişlisistem		(kolonlukirişlisistem.ST4)

PERDE ve KOLONLARDA EKSANTRISITE

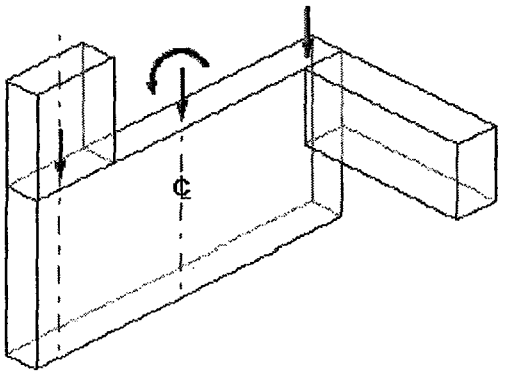

STA4-CAD Perde ve kolonlarda eksenel yük kaçıklıklarini opsiyonel olarak dikkate alir. Geometrik akslar, elemanlarin bilgi tanimi içindir. Statik hesaplarda, elemanlarin ağirlik merkezlerini dikkate alarak gerçek eksenlerle çalişir.
Perdelere zayif yönünde saplanan kirişlerin, düşey plak gibi davranan perdedeki lokal eğilme deformasyonunu sonlu elemanlara eşdeğer yöntemle elastik ankastrelik değerlerine göre opsiyonel çözüm yapabilir.

KAYMA DEFORMASYONU ve RIJITLIK BOLGELERI

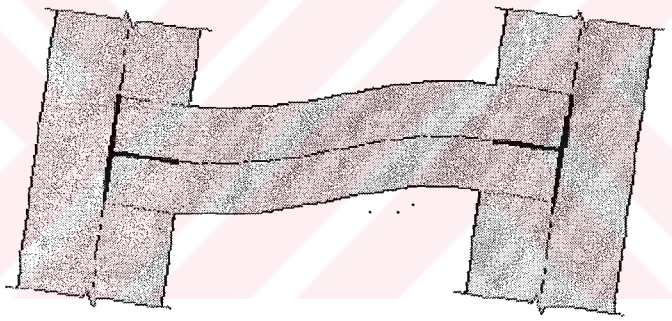

STA4-CAD Perde ve kolonlarda kayma deformasyonlarini rijitlik matrislerinde dikkate alir. Ayni şekilde rijit perdelere bağli kirişlerin kayma deformasyonlarinida perdelerin genişlikleri oraninda dikkate alarak rijitlik matrislerini olaştiriir.
Kirişlerin kolon kisminndaki bölgeleri, gerekse kolonlarin kiriş kisminndaki bölgeleri sonsuz rijit kabul edilerek moment alan teorisi ile sayisal integrasyon yapilarak gerçek rijit matrisi kurularak çözüm yapilir.
Ayni şekilde kirişlerin yük matrisinde kolon kisminndaki bölgede sonsuz rijit davranişi dikkate alarak, ankastrelik tesirlerini bulur.

STAA-CAD V11

FİRMA : | 03-23-2005

PROJE : kolonlukirişlisistem (kolonlukirişlisistem.ST4)

DÖŞEME YÜK ANALİZİ

MARLEY KAP. OD							
Kaplama (MARLEY)	0.050	t/m³	x	0.088	m	:	0.000
Kaplama harcı	2.200	t/m³	x	0.020	m	:	0.044
Tesviye betonu	2.000	t/m³	x	0.030	m	:	0.060
Sıva	2.200	t/m³	x		m	:	0.044
TOPLAM						:	0.148
FAYANS KAP. OD							
Kaplama (FAYANS)	2.200	t/m³	x	0.010	m	:	0.022
Kaplama harcı	2.200	t/m³	x	0.020	m	:	0.044
Tesviye betonu	2.000	t/m³	x	0.030	m	:	0.060
Sıva	2.200	t/m³	x		m	:	0.044
TOPLAM						:	0.170
KARO KAP. ODA							
Kaplama (KARO MOZAIK)	2.200	t/m³	x	0.020	m	:	0.044
Kaplama harcı	2.200	t/m³	x	0.020	m	:	0.044
Tesviye betonu	2.000	t/m³	x	0.040	m	:	0.080
Sıva	2.200	t/m³	x		m	:	0.044
TOPLAM						:	0.212
DUSUK DOSEME							
Kaplama (FAYANS)	2.200	t/m³	x	0.010	m	:	0.022
Kaplama harcı	2.200	t/m³	x	0.030	m	:	0.066
Tesviye betonu	2.000	t/m³	x	0.050	m	:	0.100
Sıva	2.200	t/m³	x		m	:	0.044
Dolgu	1.500	t/m³	x	0.200	m	:	0.300
TOPLAM						:	0.532
CATI DOSEMESI							
Kaplama (IZOLASYON)	0.100	t/m³	x	0.050	m	:	0.005
Tesviye betonu	2.000	t/m³	x	0.050	m	:	0.100
Sıva	2.200	t/m³	x		m	:	0.044
TOPLAM						:	0.149
MERDIVEN							
Kaplama (MERMER)	2.200	t/m³	x	0.020	m	:	0.044
Kaplama harcı	2.200	t/m³	x	0.020	m	:	0.044
Tesviye betonu	2.000	t/m³	x	0.030	m	:	0.060
Sıva	2.200	t/m³	x		m	:	0.044
TOPLAM						:	0.192

(Döşeme ağırlıkları, döşeme yük hesabında ilave edilecek)

ST4-CAD V11

FİRMA :	03-23-2005
PROJE : kolonlukirişlisistem	(kolonlukirişlisistem.ST4)

GENEL BETONARME CIZIM OPSIYONLARI

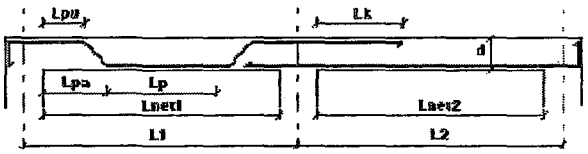

Maximum demir boyu.....cm.= 1200
Minimum demir bindirme boyu orani.....= ø x 50
min. Lp.....= Lnet1 /2
Lpa.....= Lnet1 /5
min. Lpa.....cm.= 30
min. Lpu .....= d /2
min. Lk .....= Lnet2 /4
Pilye kayma donatisi katilim orani.....= 0
Genel kanca boyu .....= ø x 10
Kiriş donatisinin, kolon içindeki aderans boyu.....= ø x 50
Kirişlerde sik etriye opsiyonu.....= sorunlu
Kirişlerde Pilye opsiyonu.....= pilyesiz
Minimum pilye açiklik orani.....= Lnet/2
Tek donatilarda, pilye ve düz donati tercihi.....= düz

KIRIS BETONARME OPSIYONLARI

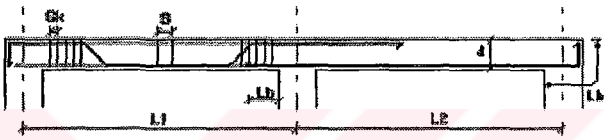

Paspayi.....cm.= 4
Min. boyuna kesit pursantaji .....= .008
Min. çekme bölgesi TS500-2000 'e göre .....= 0.0028
As min= 0.8 x fctd / fyd alýnacaktýr.
Minimum düz ve pilye donatý çapý .....ø.= 16
Minimum montaj donati çapi .....ø.= 14
Minimum gövde donati çapi .....ø.= 16
Minimum etriye donati çapi .....ø.= 10
Pilye açisi.....°.= 45
Minimum gövde demirsiz kiriş yüksekliği.....cm.= 59
Minimum düz ve montaj demir aralıği .....cm.= 20
Kayma donatisi beton katilim orani.....= .8
Süreklilik için max. kolon genişliği.....cm.= 200
Minimum montaj donati orani .....(% maxAs).= .25
Maximum etriye aralıği..S.....cm.= 20
Minimum etriye aralıği..S.....cm.= 10
Maximum etriye aralıği. Sk.(1).....cm.= 15
Maximum etriye aralıği. Sk.(2).....= d/4
Maximum etriye aralıği. Sk.(3).....= ø x 8
Maksimum tek etriye genişliği .....cm.= 40
min.(alt As/üst As) .....= .5
min.üst As=Fctd/Fyd .....= Evet
min Lb =.....= ø x 50

STAA-CAD V11

FİRMA : | 03-23-2005

PROJE : kolonlukirişlisistem (kolonlukirişlisistem.ST4)

KOLON-PERDE BETONARME OPSIYONLARI

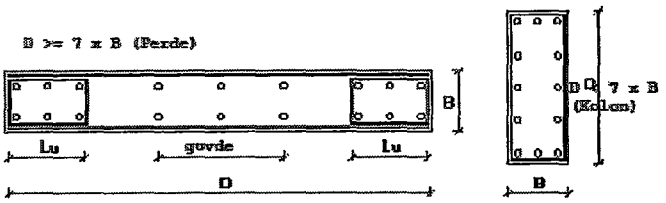


```
KOLON ve PERDELERIN betonarme opsiyonlari          :
Paspayi.........................................cm.= 4
Min.kolon çekme bölgesi.........................= .0025
Min.kolon toplam kesit .........................= .01
Kolon eksenel yük eksantirisite etkisinin alinmasi..= evet
Minimum etriye araliği..........................cm.= 10
Maximum etriye araliği.(1)......................cm.= 20
Maximum etriye araliği (2)......................min.= ø x 12
Minimum çiroz araliği...........................min.= ø x 25
Minimum donati çapi ........................ø.......= 14
Minimum etriye çapi ........................ø.......= 8
Perde/Kolon orani  (D/B)........................= 7
Perde uzun etriyelerinde gönye..................= Gönyeli
Nervürlü etriye kanca acisi.............. (90ø,135ø)= 135
min.Hcr yüksekliği .............................< D x 2
max.Hcr yüksekliği .............................>= B x 1
max.Hcr yüksekliği .............................>= Hw/6
Min.başlik bölgesi.(Hcr)........................= .002
Min.başlik bölgesi..............................= .001
Min.gövde bölgesi...............................= .0025
Min.başlik bölgesi..............................Lu= 20 cm
Min.başlik bölgesi.(Hcr)........................Lu=B x 2
Min.başlik bölgesi.(Hcr)........................Lu=D x .2
Min.başlik bölgesi..............................Lu=B x 1
Min.başlik bölgesi..............................Lu=D x .1
Başlik bölgesi min. donati çapi ................ø..= 14
Gövde  bölgesi min. donati çapi ................ø..= 12
Perdelerde tasarým eğilme momenti...............= Evet
```

TEMEL BETONARME OPSIYONLARI

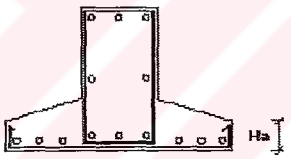


```
Paspayi.........................................cm.= 7
Min. çekme bölgesi  TS500-2000 (As min=0,8.fctd/fyd).= 0.0028
Min. toplam kesit ..............................= .005
Minimum basinç bölgesi donati orani ............= .333
Pilye açisi.....................................= 60
Minimum etriye araliği..........................cm.= 10
Maximum etriye araliği..........................cm.= 20
Maximum etriye genisliği........................cm.= 60
Minimum düz ve montaj demir araliği ............cm.= 20
Temelde, Kolon donati filiz boya................cm.= 50
Müt. temel min. etriye çapi.....................ø..= 8
Müt. temel min. düz ve pilye çapi...............ø..= 12
Müt. temel min. montaj çapi.....................ø..= 12
Müt. temel min. gövde çapi......................ø..= 10
Temel min. ampatman çapi........................ø..= 12
Ampatman kenar yüksekliği.(Ha)..................cm.= 20
```

STA4-CAD V11

FİRMA :	03-23-2005
PROJE : kolonlukirişlisistem	(kolonlukirişlisistem.ST4)

STA4-CAD PROGRAMI

ÇOK KATLI BETONARME YAPILARIN STATİK ve BETONARME ANALİZİ PROGRAMI Ver.11.0 (code:KPS)

```
PROJE İSMİ.....................................:kolonlukirişlisistem
KAT ADEDİ.......................................: 40
Bir kattaki KOLON SAYISI........................: 34
X yönü aks sayisi...............................: 13
Y yönü aks sayisi...............................: 12
DEPREM KATSAYISI.........................(Ao).: .4
        YAPI TİPİ KATSAYISI..............(R)..: 8
        YAPI ÖNEM KATSAYISI..............(I)..: 1
        ZEMİN HAKİM TİTREŞİM PERYODU..(Ta/Tb).: .1 / .3
        HAREKETLİ YÜK KATSAYISI..........(n)..: .3
        SIFIR RÖLATİF HAREKET YÜKSEKLİĞİ (m)..:.00
ZEMİN EMNİYET GERİLMESİ..............(t/m²)..:50.0
ZEMİN YATAK KATSAYISI................(t/m³)..:10000.0
BETON YOĞUNLUĞU.......................(t/m³)..:2.5
DEPREM STANDARDI ...............................:TDY97 CODE
BETONARME HESAP YÖNTEMİ ........................:TAŞIMA GÜCÜ YÖNTEMİ TS500-2000
BETONARME KESİT DONATI HESAP YÖNTEMİ ...........:BRÜT KESİTE GÖRE
DEPREM HESABI YÖNTEMİ ..........................:MOD SÜPERPOZİSYONU İLE DİNAMİK ANALİZ
TEMEL ANALİZ OPSİYONU...........................:TEMELLER DİKKATE ALINMADAN, YAPI ANALİZİ
Zemin gerilmesi hareketli yük azaltma degeri..:.60
Zemin gerilmesi deprem azaltmasi.............:.50
Zemin gerilmesi rüzgar azaltmasi.............:.25
Kolonun oturduğu kiriş tesir çarpanı..........: 1.5
Kiriş & Kolon rijitlik bölgesi opsiyonu......: Yarım Rijit davranış
Kiriş uçlarında elastik ankastrelik opsiyonu : Elastik ankastre
```

BETON ve ÇELİK MALZEME BİLGİLERİ (kg/cm²)

Yapi Elemani	Malzeme	Elastisite Modülü E	G	Beton dayanim gerilmesi	Çelik akma gerilmesi (Genel)	(Etriye)
Döşeme	BS30	318000	127200	300	4200	4200
Temel	BS30	318000	127200	300	4200	4200
Kiriş\Kolon El	BS30	318000	127200	300	4200	4200

TAŞIMA GÜCÜ MALZEME KATSAYILARI	BETON 1.50	ÇELİK 1.15
TAŞIMA GÜCÜ YÜK KATSAYILARI	SABİT YÜK 1.40	HAREKETLİ YÜK 1.60

BETONARME HESAP YÜK KOMBİNASYONU

Ölü yük Cg	Hareketli yük Cq	Zemin Cs	Deprem ± Ce	Rüzgar ± Cw
1.40	1.60	0.00	0.00	0.00
1.40	1.60	1.60	0.00	0.00
1.40	0.00	0.00	0.00	0.00
1.00	1.00	0.00	1.00	0.00
1.00	1.00	1.00	1.00	0.00
0.90	0.00	0.00	1.00	0.00
1.00	1.30	0.00	0.00	1.30
1.00	1.30	1.00	0.00	1.30
0.90	0.00	0.00	0.00	1.30
0.90	0.00	0.90	0.00	1.30

CODE:TS500T.COD

ZEMİN GERİLMESİ YÜK KOMBİNASYONU

Ölü yük Cg	Hareketli yük Cq	Zemin Cs	Deprem ± Ce	Rüzgar ± Cw
1.00	1.00	0.00	0.00	0.00
1.00	1.00	1.00	0.00	0.00
0.67	0.67	0.67	0.67	0.00
0.80	0.00	0.80	0.00	0.80

ZEMİN GERİLMESİ HAREKETLİ YÜK AZALTMA DEĞERLERİ

Kat	1	2	3	4	5	6	7	8	9	10
Eksiltme %				20	40	60	60	80	80	40

ST4-CAD V11

FİRMA : 03-23-2005

PROJE : kolonlukirişlisistem (kolonlukirişlisistem.ST4)

YAPI AKS BİLGİLERİ

X yönü aks bilgileri

no	isim	Ax	Bx
1	1	0.00	0.00
2	2	0.00	3.50
3	3	0.00	8.05
4	4	0.00	10.85
5	5	0.00	12.65
6	6	0.00	13.65
7	7	0.00	15.05
8		0.00	16.45
9		0.00	17.45
10		0.00	19.25
11		0.00	22.06
12		0.00	26.60
13		0.00	30.10

Y yönü aks bilgileri

no	isim	Ay	By
1	A	0.00	0.00
2	B	0.00	1.23
3	C	0.00	3.86
4	D	0.00	5.78
5	E	0.00	6.80
6	F	0.00	8.81
7	G	0.00	9.50
8	H	0.00	11.48
9	I	0.00	14.57
10	J	0.00	19.57
11	K	0.00	24.12
12	L	0.00	25.35

1. KAT KOLONLARI AKS BİLGİLERİ

Kolon no	X aksi	Y aksi	dx	dy	alt yük.
101	3	1	0.0	-24.5	0.00
103	7	1	0.0	0.0	0.00
105	11	1	0.0	-24.5	0.00
107	12	2	25.0	-25.0	0.00
109	10	3	0.0	0.0	0.00
111	3	4	0.0	0.0	0.00
113	13	4	25.0	-25.0	0.00
115	9	5	0.0	0.0	0.00
117	9	6	0.0	0.0	0.00
119	10	8	0.0	0.0	0.00
121	2	9	0.0	0.0	0.00
123	11	9	0.0	0.0	0.00
125	1	10	-25.0	25.5	0.00
127	7	10	0.0	0.0	0.00
129	13	10	25.0	25.5	0.00
131	12	11	25.0	25.0	0.00
133	7	12	0.0	25.0	0.00

Kolon no	X aksi	Y aksi	dx	dy	alt yük.
102	4	1	0.0	-25.0	0.00
104	10	1	0.0	-25.0	0.00
106	2	2	-25.0	-25.0	0.00
108	4	3	0.0	0.0	0.00
110	1	4	-25.0	-25.0	0.00
112	11	4	0.0	0.0	0.00
114	5	5	0.0	0.0	0.00
116	5	6	0.0	0.0	0.00
118	4	8	0.0	0.0	0.00
120	1	9	-25.0	0.0	0.00
122	7	9	0.0	0.0	0.00
124	13	9	25.0	0.0	0.00
126	3	10	0.0	0.0	0.00
128	11	10	0.0	0.0	0.00
130	2	11	-25.0	25.0	0.00
132	3	12	0.0	25.5	0.00
134	11	12	0.0	25.5	0.00

ST4-CAD V11

FİRMA :	03-23-2005
PROJE : kolonlukirişlisistem	(kolonlukirişlisistem.ST4)

KAT DIYAFRAMLARI

	40
Kat: 40	39
Kat: 39	38
Kat: 38	37
Kat: 37	36
Kat: 36	35
Kat: 35	34
Kat: 34	33
Kat: 33	32
Kat: 32	31
Kat: 31	30
Kat: 30	29
Kat: 29	28
Kat: 28	27
Kat: 27	26
Kat: 26	25
Kat: 25	24
Kat: 24	23
Kat: 23	22
Kat: 22	21
Kat: 21	20
Kat: 20	19
Kat: 19	18
Kat: 18	17
Kat: 17	16
Kat: 16	15
Kat: 15	14
Kat: 14	13
Kat: 13	12
Kat: 12	11
Kat: 11	10
Kat: 10	9
Kat: 9	8
Kat: 8	7
Kat: 7	6
Kat: 6	5
Kat: 5	4
Kat: 4	3
Kat: 3	2
Kat: 2	1
Kat: 1	

FİRMA :	03-23-2005
PROJE : kolonlukirişlisistem	(kolonlukirişlisistem.ST4)

DEPREM RAPORU

DEPREM STANDARDI : TDY97 CODE
Deprem yükü ekscentrisitesi : 0.050
DİYAFRAM SAYISI : 40
Diyafram tanimi : KAT(diyafram no)
Dinamik Analiz min. deprem yükü orani β : 1.0
YAPI DAVRANIŞ KATSAYISI : 8.00

DİNAMİK ANALİZ BİLGİLERİ

TASARIM SPECTRUM BİLGİSİ (TDY97 SPECTRUM)

T (s)	Sa (m/s²) Ao.I.S(t)
0.00	4.000
0.10	10.000
0.20	10.000
0.40	7.944
0.50	6.644
0.60	5.744
0.70	5.076
0.80	4.564
0.90	4.152
1.00	3.816
1.10	3.536
1.20	3.300
1.30	3.096
1.40	2.916
1.50	2.800
5.00	2.800

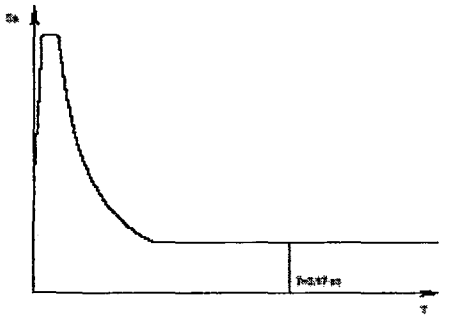

MODAL ANALİZ - YAPI PERYOD ve VEKTÖRLERİ

Mod w T yön	1.mod 1.98 3.1695 y	2.mod 1.99 3.1617 x	3.mod 2.82 2.2293 b	4.mod 6.12 1.0261 y	5.mod 6.28 1.0012 x	6.mod 8.48 0.7414 b	7.mod 11.53 0.5452 y	8.mod 11.74 0.5351 x	9.mod 14.62 0.4297 b
1/1x	-0.00002	0.00854	-0.00007	-0.00001	0.00241	-0.00048	-0.00007	0.00436	-0.00129
2/2x	-0.00005	0.00167	-0.00019	-0.00004	0.00720	-0.00134	-0.00021	0.01306	-0.00363
3/3x	-0.00010	0.00310	-0.00021	-0.00008	0.01320	-0.00227	-0.00037	0.02324	-0.00620
4/4x	-0.00015	0.00470	-0.00044	-0.00012	0.01938	-0.00320	-0.00052	0.03333	-0.00867
5/5x	-0.00020	0.00640	-0.00058	-0.00015	0.02553	-0.00410	-0.00068	0.04254	-0.01088
6/6x	-0.00026	0.00818	-0.00072	-0.00019	0.03148	-0.00496	-0.00081	0.05035	-0.01274
7/7x	-0.00031	0.01003	-0.00090	-0.00022	0.03711	-0.00578	-0.00091	0.05641	-0.01418
8/8x	-0.00037	0.01193	-0.00108	-0.00025	0.04232	-0.00655	-0.00097	0.06045	-0.01514
9/9x	-0.00044	0.01389	-0.00127	-0.00028	0.04704	-0.00727	-0.00100	0.06231	-0.01560
10/10x	-0.00050	0.01589	-0.00148	-0.00031	0.05120	-0.00792	-0.00100	0.06191	-0.01552
11/11x	-0.00056	0.01792	-0.00170	-0.00033	0.05474	-0.00849	-0.00095	0.05926	-0.01490
12/12x	-0.00063	0.02000	-0.00194	-0.00034	0.05762	-0.00899	-0.00088	0.05445	-0.01277
13/13x	-0.00069	0.02210	-0.00219	-0.00036	0.05978	-0.00939	-0.00077	0.04766	-0.01216
14/14x	-0.00076	0.02422	-0.00244	-0.00037	0.06119	-0.00970	-0.00063	0.03915	-0.01011
15/15x	-0.00082	0.02636	-0.00271	-0.00037	0.06164	-0.00991	-0.00047	0.02923	-0.00765
16/16x	-0.00089	0.02850	-0.00299	-0.00037	0.06171	-0.01001	-0.00029	0.01828	-0.00439
17/17x	-0.00096	0.03066	-0.00328	-0.00036	0.06080	-0.01000	-0.00011	0.00671	-0.00210
18/18x	-0.00102	0.03281	-0.00358	-0.00035	0.05911	-0.00987	0.00008	-0.00504	0.00088
19/19x	-0.00109	0.03496	-0.00389	-0.00034	0.05666	-0.00962	0.00027	-0.01654	0.00385
20/20x	-0.00116	0.03710	-0.00420	-0.00032	0.05348	-0.00926	0.00044	-0.02734	0.00669
21/21x	-0.00122	0.03922	-0.00452	-0.00029	0.04961	-0.00877	0.00059	-0.03703	0.00930
22/22x	-0.00129	0.04133	-0.00484	-0.00027	0.04508	-0.00817	0.00073	-0.04526	0.01158
23/23x	-0.00135	0.04342	-0.00517	-0.00023	0.03995	-0.00745	0.00083	-0.05170	0.01344
24/24x	-0.00142	0.04548	-0.00550	-0.00020	0.03428	-0.00661	0.00090	-0.05611	0.01480
25/25x	-0.00148	0.04751	-0.00584	-0.00016	0.02814	-0.00567	0.00094	-0.05832	0.01561
26/26x	-0.00154	0.04951	-0.00618	-0.00012	0.02160	-0.00463	0.00093	-0.05827	0.01582
27/27x	-0.00160	0.05147	-0.00652	-0.00008	0.01474	-0.00350	0.00090	-0.05592	0.01542
28/28x	-0.00166	0.05338	-0.00686	-0.00004	0.00763	-0.00229	0.00082	-0.05138	0.01440
29/29x	-0.00172	0.05526	-0.00720	0.00000	0.00026	-0.00099	0.00072	-0.04481	0.01280
30/30x	-0.00177	0.05708	-0.00754	0.00005	-0.00698	0.00036	0.00058	-0.03645	0.01066
31/31x	-0.00183	0.05885	-0.00788	0.00009	-0.01430	0.00175	0.00042	-0.02661	0.00804
32/32x	-0.00188	0.06057	-0.00822	0.00013	-0.02154	0.00317	0.00025	-0.01567	0.00506
33/33x	-0.00193	0.06223	-0.00855	0.00017	-0.02858	0.00460	0.00006	-0.00402	0.00179
34/34x	-0.00198	0.06383	-0.00888	0.00021	-0.03537	0.00602	-0.00013	0.00790	-0.00163
35/35x	-0.00203	0.06536	-0.00921	0.00025	-0.04182	0.00743	-0.00032	0.01966	-0.00507
36/36x	-0.00207	0.06683	-0.00953	0.00029	-0.04787	0.00879	-0.00049	0.02832	-0.00842
37/37x	-0.00212	0.06824	-0.00984	0.00032	-0.05344	0.01010	-0.00066	0.04101	-0.01154
38/38x	-0.00216	0.06958	-0.01015	0.00035	-0.05851	0.01132	-0.00080	0.04990	-0.01431
39/39x	-0.00220	0.07086	-0.01045	0.00037	-0.06305	0.01246	-0.00091	0.05728	-0.01664
40/40x	-0.00223	0.07208	-0.01074	0.00040	-0.06713	0.01349	-0.00101	0.06325	-0.01852
1/1y	0.00059	0.00002	0.00000	0.00230	0.00002	0.00001	0.00431	0.00007	0.00002
2/2y	0.00158	0.00005	0.00000	0.00705	0.00005	0.00002	0.01305	0.00023	0.00005
3/3y	0.00296	0.00009	0.00001	0.01287	0.00008	0.00004	0.02238	0.00040	0.00009
4/4y	0.00451	0.00014	0.00001	0.01904	0.00012	0.00005	0.03374	0.00058	0.00013
5/5y	0.00619	0.00019	0.00001	0.02524	0.00016	0.00007	0.04328	0.00074	0.00017
6/6y	0.00795	0.00025	0.00002	0.03126	0.00020	0.00008	0.05145	0.00088	0.00020

STAA-99 V11

FİRMA :										03-23-2005
PROJE : kolonlukirişlisistem										(kolonlukirişlisistem.ST4)

7/7y	0.00979	0.00021	0.00062	0.03699	0.00024	0.00009	0.05784	0.00099	0.00022	
8/8y	0.01168	0.00036	0.00063	0.04232	0.00027	0.00011	0.06218	0.00107	0.00024	
9/9y	0.01364	0.00043	0.00063	0.04716	0.00030	0.00012	0.06429	0.00110	0.00025	
10/10y	0.01564	0.00049	0.00064	0.05145	0.00032	0.00013	0.06407	0.00110	0.00025	
11/11y	0.01769	0.00055	0.00064	0.05512	0.00035	0.00014	0.06152	0.00105	0.00024	
12/12y	0.01977	0.00062	0.00065	0.05812	0.00037	0.00015	0.05673	0.00097	0.00023	
13/13y	0.02188	0.00068	0.00065	0.06041	0.00039	0.00016	0.04958	0.00085	0.00021	
14/14y	0.02401	0.00075	0.00066	0.06194	0.00040	0.00017	0.04123	0.00071	0.00018	
15/15y	0.02617	0.00082	0.00067	0.06270	0.00040	0.00017	0.03109	0.00053	0.00014	
16/16y	0.02834	0.00089	0.00067	0.06267	0.00040	0.00017	0.01986	0.00034	0.00010	
17/17y	0.03052	0.00096	0.00068	0.06185	0.00040	0.00018	0.00794	0.00014	0.00005	
18/18y	0.03271	0.00103	0.00069	0.06023	0.00039	0.00017	-0.00420	-0.00007	0.00008	
19/19y	0.03489	0.00109	0.00069	0.05785	0.00037	0.00017	-0.01612	-0.00028	-0.00006	
20/20y	0.03707	0.00116	0.00070	0.05471	0.00036	0.00017	-0.02736	-0.00047	-0.00010	
21/21y	0.03924	0.00123	0.00071	0.05086	0.00033	0.00016	-0.03750	-0.00064	-0.00014	
22/22y	0.04140	0.00130	0.00072	0.04634	0.00030	0.00015	-0.04614	-0.00079	-0.00018	
23/23y	0.04353	0.00137	0.00072	0.04119	0.00027	0.00014	-0.05297	-0.00091	-0.00022	
24/24y	0.04565	0.00143	0.00073	0.03549	0.00023	0.00012	-0.05773	-0.00099	-0.00025	
25/25y	0.04774	0.00150	0.00074	0.02929	0.00019	0.00011	-0.06022	-0.00104	-0.00026	
26/26y	0.04979	0.00157	0.00075	0.02268	0.00015	0.00009	-0.06036	-0.00104	-0.00027	
27/27y	0.05181	0.00163	0.00075	0.01571	0.00011	0.00007	-0.05813	-0.00100	-0.00027	
28/28y	0.05379	0.00169	0.00076	0.00849	0.00006	0.00005	-0.05360	-0.00092	-0.00025	
29/29y	0.05572	0.00175	0.00077	0.00109	0.00001	0.00002	-0.04695	-0.00081	-0.00023	
30/30y	0.05761	0.00181	0.00078	-0.00640	-0.00004	0.00000	-0.03842	-0.00066	-0.00019	
31/31y	0.05945	0.00187	0.00079	-0.01390	-0.00008	-0.00003	-0.02832	-0.00049	-0.00015	
32/32y	0.06123	0.00193	0.00079	-0.02131	-0.00013	-0.00005	-0.01703	-0.00028	-0.00010	
33/33y	0.06296	0.00198	0.00080	-0.02855	-0.00018	-0.00008	-0.00495	-0.00009	-0.00004	
34/34y	0.06462	0.00204	0.00081	-0.03554	-0.00023	-0.00011	0.00746	0.00012	0.00002	
35/35y	0.06622	0.00209	0.00082	-0.04220	-0.00027	-0.00013	0.01976	0.00034	0.00008	
36/36y	0.06775	0.00214	0.00082	-0.04846	-0.00031	-0.00016	0.03151	0.00054	0.00014	
37/37y	0.06921	0.00218	0.00083	-0.05426	-0.00035	-0.00018	0.04229	0.00073	0.00020	
38/38y	0.07060	0.00223	0.00084	-0.05955	-0.00039	-0.00021	0.05179	0.00089	0.00025	
39/39y	0.07192	0.00227	0.00084	-0.06433	-0.00042	-0.00023	0.05982	0.00103	0.00029	
40/40y	0.07320	0.00231	0.00085	-0.06867	-0.00045	-0.00025	0.06647	0.00115	0.00033	
1/1b	0.00000	0.00001	0.00008	0.00000	0.00003	0.00025	0.00000	0.00009	0.00042	
2/2b	0.00000	0.00003	0.00024	0.00000	0.00010	0.00075	-0.00001	0.00029	0.00127	
3/3b	0.00000	0.00005	0.00043	0.00000	0.00020	0.00134	-0.00002	0.00053	0.00225	
4/4b	0.00000	0.00008	0.00062	-0.00001	0.00030	0.00196	-0.00003	0.00077	0.00320	
5/5b	-0.00001	0.00010	0.00085	-0.00001	0.00040	0.00257	-0.00003	0.00098	0.00405	
6/6b	-0.00001	0.00013	0.00106	-0.00001	0.00049	0.00316	-0.00004	0.00117	0.00478	
7/7b	-0.00001	0.00016	0.00128	-0.00001	0.00059	0.00373	-0.00004	0.00131	0.00536	
8/8b	-0.00001	0.00019	0.00150	-0.00002	0.00067	0.00420	-0.00005	0.00140	0.00562	
9/9b	-0.00001	0.00022	0.00172	-0.00002	0.00075	0.00464	-0.00005	0.00142	0.00574	
10/10b	-0.00001	0.00024	0.00192	-0.00002	0.00081	0.00502	-0.00005	0.00140	0.00564	
11/11b	-0.00001	0.00027	0.00215	-0.00002	0.00086	0.00533	-0.00004	0.00132	0.00531	
12/12b	-0.00002	0.00030	0.00236	-0.00002	0.00090	0.00556	-0.00004	0.00119	0.00479	
13/13b	-0.00002	0.00033	0.00257	-0.00002	0.00093	0.00572	-0.00003	0.00101	0.00407	
14/14b	-0.00002	0.00036	0.00278	-0.00002	0.00095	0.00580	-0.00003	0.00078	0.00321	
15/15b	-0.00002	0.00038	0.00298	-0.00002	0.00095	0.00580	-0.00002	0.00053	0.00222	
16/16b	-0.00002	0.00041	0.00318	-0.00002	0.00094	0.00571	-0.00001	0.00025	0.00114	
17/17b	-0.00002	0.00044	0.00337	-0.00002	0.00091	0.00555	0.00000	-0.00004	0.00002	
18/18b	-0.00003	0.00046	0.00356	-0.00002	0.00087	0.00530	0.00001	-0.00032	-0.00105	
19/19b	-0.00003	0.00049	0.00375	-0.00002	0.00082	0.00499	0.00002	-0.00062	-0.00216	
20/20b	-0.00003	0.00051	0.00393	-0.00002	0.00075	0.00460	0.00003	-0.00087	-0.00315	
21/21b	-0.00003	0.00053	0.00410	-0.00002	0.00068	0.00415	0.00004	-0.00110	-0.00401	
22/22b	-0.00003	0.00056	0.00427	-0.00001	0.00059	0.00364	0.00004	-0.00129	-0.00471	
23/23b	-0.00003	0.00058	0.00443	-0.00001	0.00049	0.00307	0.00005	-0.00142	-0.00522	
24/24b	-0.00003	0.00060	0.00459	-0.00001	0.00039	0.00247	0.00005	-0.00150	-0.00553	
25/25b	-0.00003	0.00062	0.00473	-0.00001	0.00028	0.00183	0.00005	-0.00153	-0.00562	
26/26b	-0.00004	0.00064	0.00487	0.00000	0.00016	0.00116	0.00005	-0.00149	-0.00549	
27/27b	-0.00004	0.00066	0.00501	0.00000	0.00004	0.00048	0.00005	-0.00139	-0.00515	
28/28b	-0.00004	0.00068	0.00513	0.00000	-0.00008	-0.00021	0.00004	-0.00124	-0.00460	
29/29b	-0.00004	0.00070	0.00525	0.00001	-0.00021	-0.00093	0.00003	-0.00104	-0.00387	
30/30b	-0.00004	0.00071	0.00536	0.00001	-0.00033	-0.00158	0.00003	-0.00080	-0.00299	
31/31b	-0.00004	0.00073	0.00546	0.00001	-0.00045	-0.00224	0.00002	-0.00052	-0.00199	
32/32b	-0.00004	0.00074	0.00556	0.00001	-0.00056	-0.00287	0.00001	-0.00022	-0.00091	
33/33b	-0.00004	0.00075	0.00564	0.00002	-0.00067	-0.00345	0.00000	0.00010	0.00021	
34/34b	-0.00004	0.00076	0.00572	0.00002	-0.00077	-0.00400	-0.00001	0.00041	0.00132	
35/35b	-0.00004	0.00077	0.00578	0.00002	-0.00086	-0.00448	-0.00002	0.00071	0.00239	
36/36b	-0.00004	0.00078	0.00584	0.00002	-0.00094	-0.00491	-0.00003	0.00099	0.00337	
37/37b	-0.00004	0.00078	0.00589	0.00002	-0.00101	-0.00528	-0.00004	0.00123	0.00422	
38/38b	-0.00004	0.00080	0.00592	0.00003	-0.00107	-0.00557	-0.00005	0.00144	0.00493	
39/39b	-0.00004	0.00080	0.00596	0.00003	-0.00111	-0.00580	-0.00005	0.00160	0.00547	
40/40b	-0.00004	0.00081	0.00599	0.00003	-0.00115	-0.00598	-0.00006	0.00172	0.00586	
Mxx%	0.070	71.992	1.161	0.000	14.356	0.375	0.001	3.779	0.226	Σ= 92.0
Myx%	72.755	0.072	0.001	14.900	0.001	0.000	4.069	0.001	0.000	Σ= 91.8
Mxx%	0.004	1.340	77.571	0.000	0.162	9.664	0.000	0.191	3.345	

Mxx=∑[(∑m.ϕ)²/Mx]= %91.97 > %90.00 Dinamik kütle orani yeterli. ✓
Myx=∑[(∑m.ϕ)²/My]= %91.80 > %90.00 Dinamik kütle orani yeterli. ✓

EŞDEĞER DEPREM HESABI I. DOĞAL TİTREŞİM PERYODUNUN KONTROLU
Hn=130.00m ∑Atmx= 0.000 >> Ctmx= 0.050 ∑Atmy= 0.000 >> Ctmy= 0.050

$T1x=Ctmx \cdot Hn^{3/4} =$ 1.925 s. > 1.0 Tx= 2.502 s. < 1.3 x 1.925 s. ✓

$T1y=Ctmy \cdot Hn^{3/4} =$ 1.925 s. > 1.0 Ty= 2.502 s. < 1.3 x 1.925 s. ✓

STAA-CAD V11

FİRMA : | 03-23-2005

PROJE : kolonlukirişlisistem (kolonlukirişlisistem.ST4)

KAT KÜTLESİ ve RİJİTLİK MERKEZİ (t)

Kat (dyE)	H (m)	Mg	Mq	Xg (m)	Xr (m)	Yg (m)	Yr (m)	∑Wk
40	130.00	1252.40	131.41	15.05	15.02	12.44	12.33	1291.826
39	126.75	1252.40	131.41	15.05	15.02	12.44	12.33	1291.826
38	123.50	1252.40	131.41	15.05	15.02	12.44	12.33	1291.826
37	120.25	1252.40	131.41	15.05	15.02	12.44	12.33	1291.826
36	117.00	1252.40	131.41	15.05	15.02	12.44	12.33	1291.826
35	113.75	1252.40	131.41	15.05	15.02	12.44	12.33	1291.826
34	110.50	1252.40	131.41	15.05	15.02	12.44	12.33	1291.826
33	107.25	1252.40	131.41	15.05	15.02	12.44	12.33	1291.826
32	104.00	1252.40	131.41	15.05	15.02	12.44	12.33	1291.826
31	100.75	1252.40	131.41	15.05	15.02	12.44	12.33	1291.826
30	97.50	1252.40	131.41	15.05	15.02	12.44	12.33	1291.826
29	94.25	1252.40	131.41	15.05	15.02	12.44	12.33	1291.826
28	91.00	1252.40	131.41	15.05	15.02	12.44	12.33	1291.826
27	87.75	1252.40	131.41	15.05	15.02	12.44	12.33	1291.826
26	84.50	1252.40	131.41	15.05	15.02	12.44	12.33	1291.826
25	81.25	1252.40	131.41	15.05	15.02	12.44	12.33	1291.826
24	78.00	1252.40	131.41	15.05	15.02	12.44	12.33	1291.826
23	74.75	1252.40	131.41	15.05	15.02	12.44	12.33	1291.826
22	71.50	1252.40	131.41	15.05	15.02	12.44	12.33	1291.826
21	68.25	1252.40	131.41	15.05	15.02	12.44	12.33	1291.826
20	65.00	1252.40	131.41	15.05	15.02	12.44	12.33	1291.826
19	61.75	1252.40	131.41	15.05	15.02	12.44	12.33	1291.826
18	58.50	1252.40	131.41	15.05	15.02	12.44	12.33	1291.826
17	55.25	1252.40	131.41	15.05	15.02	12.44	12.33	1291.826
16	52.00	1252.40	131.41	15.05	15.02	12.44	12.33	1291.826
15	48.75	1252.40	131.41	15.05	15.02	12.44	12.33	1291.826
14	45.50	1252.40	131.41	15.05	15.02	12.44	12.33	1291.826
13	42.25	1252.40	131.41	15.05	15.02	12.44	12.33	1291.826
12	39.00	1252.40	131.41	15.05	15.02	12.44	12.33	1291.826
11	35.75	1252.40	131.41	15.05	15.02	12.44	12.33	1291.826
10	32.50	1252.40	131.41	15.05	15.02	12.44	12.33	1291.826
9	29.25	1252.40	131.41	15.05	15.02	12.44	12.33	1291.826
8	26.00	1252.40	131.41	15.05	15.02	12.44	12.33	1291.826
7	22.75	1252.40	131.41	15.05	15.02	12.44	12.33	1291.826
6	19.50	1252.40	131.41	15.05	15.02	12.44	12.33	1291.826
5	16.25	1252.40	131.41	15.05	15.02	12.44	12.33	1291.826
4	13.00	1252.40	131.41	15.05	15.02	12.44	12.33	1291.826
3	9.75	1252.40	131.41	15.05	15.02	12.44	12.33	1291.826
2	6.50	1252.40	131.41	15.05	15.02	12.44	12.33	1291.826
1	3.25	1252.40	131.41	15.05	15.02	12.44	12.33	1291.826

$\sum W_t$ = 51673.045

EŞDEĞER DEPREM FORMÜLÜ $F_{di} = (V_t - F_t)\dfrac{W_i.H_i}{\sum W_i.H_i}$

FİRMA : | 03-23-2005

PROJE : kolonlukirişlisistem (kolonlukirişlisistem.ST4)

DEPREM KUVVETİ (t)
Deprem tepe yükü Ftx= 362.07 Fty= 362.07 (t)

Kat (dyf)	X YÖNÜ Modal Analiz	X YÖNÜ Eşdeğer dep.yön.	X YÖNÜ Deprem yükü	Y YÖNÜ Modal Analiz	Y YÖNÜ Eşdeğer dep.yön.	Y YÖNÜ Deprem yükü	Kat tipi
40	71.252	445.224	175.995	76.895	445.224	188.095	ÜST KAT
39	59.756	81.084	147.601	62.925	81.084	153.922	NORMAL
38	51.535	79.005	127.294	52.724	79.005	128.969	NORMAL
37	44.432	76.926	109.750	44.364	76.926	108.520	NORMAL
36	38.420	74.847	94.900	37.733	74.847	92.299	NORMAL
35	33.575	72.768	82.931	32.736	72.768	80.075	NORMAL
34	29.801	70.689	73.609	29.083	70.689	71.140	NORMAL
33	26.905	68.610	66.458	26.416	68.610	64.616	NORMAL
32	24.670	66.531	60.937	24.407	66.531	59.702	NORMAL
31	22.881	64.452	56.516	22.788	64.452	55.742	NORMAL
30	21.258	62.373	52.754	21.366	62.373	52.265	NORMAL
29	19.993	60.294	49.385	20.042	60.294	49.028	NORMAL
28	18.752	58.214	46.318	18.806	58.214	46.001	NORMAL
27	17.640	56.135	43.572	17.686	56.135	43.263	NORMAL
26	16.678	54.056	41.197	16.724	54.056	40.909	NORMAL
25	15.684	51.977	39.233	15.943	51.977	38.998	NORMAL
24	15.262	49.898	37.697	15.345	49.898	37.536	NORMAL
23	14.802	47.819	36.563	14.914	47.819	36.481	NORMAL
22	14.484	45.740	35.775	14.616	45.740	35.753	NORMAL
21	14.281	43.661	35.274	14.419	43.661	35.270	NORMAL
20	14.173	41.582	35.007	14.297	41.582	34.972	NORMAL
19	14.140	39.503	34.926	14.234	39.503	34.818	NORMAL
18	14.169	37.424	34.999	14.227	37.424	34.801	NORMAL
17	14.254	35.344	35.208	14.276	35.344	34.920	NORMAL
16	14.377	33.265	35.512	14.370	33.265	35.150	NORMAL
15	14.508	31.186	35.835	14.480	31.186	35.419	NORMAL
14	14.605	29.107	36.075	14.565	29.107	35.627	NORMAL
13	14.627	27.028	36.129	14.588	27.028	35.665	NORMAL
12	14.540	24.949	35.913	14.490	24.949	35.443	NORMAL
11	14.334	22.870	35.405	14.284	22.870	34.941	NORMAL
10	14.043	20.791	34.687	14.005	20.791	34.257	NORMAL
9	13.741	18.712	33.940	13.730	18.712	33.585	NORMAL
8	13.498	16.633	33.341	13.533	16.633	33.103	NORMAL
7	13.354	14.554	32.985	13.447	14.554	32.892	NORMAL
6	13.303	12.475	32.859	13.450	12.475	32.899	NORMAL
5	13.246	10.395	32.717	13.416	10.395	32.818	NORMAL
4	12.880	8.316	31.813	13.019	8.316	31.846	NORMAL
3	11.681	6.237	28.852	11.736	6.237	28.708	NORMAL
2	9.204	4.158	22.735	9.176	4.158	22.444	NORMAL
1	5.756	2.079	14.223	5.735	2.079	14.030	NORMAL
Σ	826.795	2066.922	2066.922	844.982	2066.922	2066.922	GENEL

Vt=W.A(t)/Ra(t)> 0,10. Ao.I.W 2066.92 , 2066.92 > 2066.92
X Deprem kontrol: 1.00 x 2066.922 = 2066.922 > 826.795 >>> 2066.922
Y Deprem kontrol: 1.00 x 2066.922 = 2066.922 > 844.982 >>> 2066.922

KİRİŞ VE KOLON KAPASİTELERİNE GÖRE YAPI GÖÇME YÜKÜ
KOLON TABAN KAPASİTE MOMENTLERİ TOPLAMI : Mrx=18222.69 (tm) Mry=19094.82 (tm)
KOLONLARA BAĞLI KİRİŞ KAPASİTE MOMENTLERİ TOPLAMI : Mrx=273723.75 (tm) Mry=217139.08 (tm)
∑Mc<∑Mb > Mb=Mc KİRİŞ KAPASİTE MOMENTLERİ TOPLAMI : Mrx=196507.73 (tm) Mry=190332.19 (tm)
X YÖNÜ GÖÇME KAPASİTESİ : Px=2066.92 x (18222.69 + 196507.73) / 177130.94 = 2505.67 (t)
Y YÖNÜ GÖÇME KAPASİTESİ : Py=2066.92 x (19094.82 + 190332.19) / 177872.55 = 2433.59 (t)

Kat no	X YÖNÜ Kolon ∑Mc	X YÖNÜ Kiriş (Mci > Mbi) ∑Mbi	X YÖNÜ Kapasite Vr	Y YÖNÜ Kolon ∑Mc	Y YÖNÜ Kiriş (Mci > Mbi) ∑Mbi	Y YÖNÜ Kapasite Vr
40	11917.14	2775.92	4520.94	12704.03	2452.86	4663.66
39	12581.77	5637.34	3631.05	13473.13	5241.12	2715.09
38	13259.26	8499.97	3176.05	14238.67	8027.84	3223.29
37	13890.27	11510.64	2899.69	14964.78	11091.73	2939.46
36	14492.07	14724.42	2719.90	15658.11	14424.81	2760.78
35	15027.31	18074.65	2589.04	16295.08	17996.26	2640.64
34	15539.10	21586.32	2495.57	16916.81	21778.27	2560.29
33	16059.24	25261.46	2430.46	17517.68	25725.04	2505.46
32	16556.66	29116.13	2385.20	18092.96	29809.32	2465.96
31	17057.55	33050.60	2351.18	18652.71	34077.11	2441.66
30	17527.20	37120.76	2326.88	19165.23	38450.13	2424.06
29	17969.97	41427.12	2312.66	19684.68	42911.19	2410.24
28	18387.56	45823.68	2302.33	20147.14	47542.07	2401.83
27	18779.37	50289.05	2293.00	20577.26	52199.06	2393.10
26	19142.60	54974.95	2290.30	20973.20	56983.00	2387.40
25	19477.15	59735.27	2288.68	21334.82	61829.59	2382.00
24	19783.70	64622.57	2289.82	21544.63	66758.13	2376.67
23	20060.18	69584.70	2292.25	21640.17	71755.22	2375.62
22	20305.71	74632.57	2296.46	22093.03	76802.87	2375.60
21	20527.20	79720.55	2301.30	22319.00	81902.94	2377.06
20	20717.62	84904.30	2308.23	22575.38	87026.27	2380.58
19	20873.32	90242.53	2316.22	22705.54	92179.06	2382.36
18	21000.13	95662.36	2330.06	22795.19	97426.98	2387.19
17	21087.73	101212.78	2343.26	22820.90	102734.09	2392.31
16	21132.41	106790.08	2356.88	22794.32	108094.06	2398.33
15	21120.35	112397.76	2370.31	22702.75	113488.22	2404.59

STAA-CAD V11

FİRMA : 03-23-2005

PROJE : kolonlukirişlisistem (kolonlukirişlisistem.ST4)

14	21082.04	118087.98	2384.85	22579.04	118947.23	2412.02
13	21011.65	123921.46	2400.98	22428.15	124503.21	2420.84
12	20914.52	129789.22	2416.53	22293.90	130128.20	2429.99
11	20778.08	135724.95	2431.50	22024.43	135763.69	2438.11
10	20649.25	141605.81	2447.45	21754.59	141492.06	2446.06
9	20494.11	147937.61	2462.41	21439.45	147197.56	2452.21
8	20303.16	154111.31	2476.25	21115.48	152923.45	2458.08
7	20077.57	160503.77	2492.09	20729.61	158687.78	2463.52
6	19820.49	167003.61	2508.30	20303.61	164512.63	2469.39
5	19528.79	173540.53	2523.95	19841.66	170354.66	2475.02
4	19196.54	180133.66	2538.31	19348.44	176156.09	2478.71
3	18830.67	186512.83	2545.71	18831.52	181748.20	2476.04
2	18156.12	192377.94	2535.97	18457.06	186776.53	2461.64
1	18222.69	196507.75	2505.67	19094.82	190332.17	2433.59

(Mci ≥ Mbi) >> ∑Mbi Kiriş Plastik Mafsal Kontrolu

Rüzgar kuvvetleri (t)

Kat (dyF)	X-yönü F	X-yönü ey m	Y-yönü F	Y-yönü ex m
40	10.875	15.050	12.913	12.675
39	10.875	15.050	12.913	12.675
38	10.875	15.050	12.913	12.675
37	10.875	15.050	12.913	12.675
36	10.875	15.050	12.913	12.675
35	10.875	15.050	12.913	12.675
34	10.875	15.050	12.913	12.675
33	10.875	15.050	12.913	12.675
32	10.875	15.050	12.913	12.675
31	10.875	15.050	12.913	12.675
30	10.875	15.050	12.913	12.675
29	10.875	15.050	12.913	12.675
28	10.875	15.050	12.913	12.675
27	10.875	15.050	12.913	12.675
26	10.875	15.050	12.913	12.675
25	10.875	15.050	12.913	12.675
24	10.875	15.050	12.913	12.675
23	10.875	15.050	12.913	12.675
22	10.875	15.050	12.913	12.675
21	10.875	15.050	12.913	12.675
20	10.875	15.050	12.913	12.675
19	10.875	15.050	12.913	12.675
18	10.875	15.050	12.913	12.675
17	10.875	15.050	12.913	12.675
16	10.875	15.050	12.913	12.675
15	10.875	15.050	12.913	12.675
14	10.875	15.050	12.913	12.675
13	10.875	15.050	12.913	12.675
12	10.875	15.050	12.913	12.675
11	10.875	15.050	12.913	12.675
10	10.875	15.050	12.913	12.675
9	10.875	15.050	12.913	12.675
8	10.875	15.050	12.913	12.675
7	10.875	15.050	12.913	12.675
6	7.909	15.050	9.391	12.675
5	7.909	15.050	9.391	12.675
4	7.909	15.050	9.391	12.675
3	7.909	15.050	9.391	12.675
2	4.943	15.050	5.870	12.675
1	4.943	15.050	5.870	12.675

STAAD V11

FİRMA :	03-23-2005
PROJE : kolonlukirişlisistem	(kolonlukirişlisistem.ST4)

Kat Deprem deplasmanları

Kat	9. yükleme		10. yükleme		11. yükleme		12. yükleme	
(dyf)	δx (m)	θx (rad)	δx (m)	θx (rad)	δy (m)	θx (rad)	δy (m)	θx (rad)
40	0.1857102	0.0020464	0.1831005	0.0001879	-0.188831	-0.001104	-0.188908	0.0011119
39	0.1822562	0.0020305	0.1796677	0.0001842	-0.185180	-0.001097	-0.185256	0.0011043
38	0.1785953	0.0020112	0.1760816	0.0001805	-0.181321	-0.001087	-0.181396	0.0010946
37	0.1747148	0.0019880	0.1721807	0.0001767	-0.177238	-0.001076	-0.177312	0.0010827
36	0.1706306	0.0019611	0.1681209	0.0001726	-0.172946	-0.001062	-0.173021	0.0010687
35	0.1663664	0.0019307	0.1639054	0.0001682	-0.168474	-0.001046	-0.168546	0.0010529
34	0.1619451	0.0018971	0.1595270	0.0001635	-0.163843	-0.001029	-0.163914	0.0010353
33	0.1573872	0.0018608	0.1550156	0.0001586	-0.159078	-0.001010	-0.159147	0.0010163
32	0.1527104	0.0018220	0.1503887	0.0001535	-0.154197	-0.000990	-0.154264	0.0009960
31	0.1479200	0.0017809	0.1456611	0.0001482	-0.149217	-0.000969	-0.149283	0.0009745
30	0.1430592	0.0017378	0.1408457	0.0001428	-0.144152	-0.000946	-0.144216	0.0009518
29	0.1381695	0.0016928	0.1359541	0.0001373	-0.139014	-0.000922	-0.139077	0.0009281
28	0.1330917	0.0016460	0.1309965	0.0001317	-0.133817	-0.000898	-0.133878	0.0009034
27	0.1280158	0.0015977	0.1259829	0.0001260	-0.128571	-0.000873	-0.128630	0.0008778
26	0.1228914	0.0015479	0.1209228	0.0001203	-0.123287	-0.000846	-0.123344	0.0008513
25	0.1177276	0.0014966	0.1158250	0.0001145	-0.117974	-0.000819	-0.118029	0.0008241
24	0.1125328	0.0014441	0.1106980	0.0001088	-0.112640	-0.000792	-0.112693	0.0007961
23	0.1073148	0.0013904	0.1055492	0.0001030	-0.107293	-0.000763	-0.107344	0.0007674
22	0.1020803	0.0013356	0.1003854	0.0000973	-0.101941	-0.000734	-0.101990	0.0007380
21	0.0968357	0.0012796	0.0952129	0.0000915	-0.096590	-0.000704	-0.096637	0.0007079
20	0.0915865	0.0012226	0.0900372	0.0000857	-0.091246	-0.000674	-0.091291	0.0006772
19	0.0863381	0.0011645	0.0848637	0.0000800	-0.085915	-0.000643	-0.085958	0.0006459
18	0.0810960	0.0011054	0.0796976	0.0000742	-0.080602	-0.000611	-0.080643	0.0006140
17	0.0758657	0.0010453	0.0745447	0.0000685	-0.075313	-0.000579	-0.075351	0.0005815
16	0.0706520	0.0009842	0.0694107	0.0000627	-0.070051	-0.000546	-0.070087	0.0005485
15	0.0654625	0.0009221	0.0643012	0.0000570	-0.064824	-0.000513	-0.064857	0.0005149
14	0.0603036	0.0008590	0.0592224	0.0000513	-0.059635	-0.000479	-0.059665	0.0004806
13	0.0551799	0.0007951	0.0541811	0.0000457	-0.054490	-0.000444	-0.054519	0.0004458
12	0.0500997	0.0007302	0.0491843	0.0000401	-0.049398	-0.000409	-0.049424	0.0004105
11	0.0450708	0.0006646	0.0442399	0.0000345	-0.044365	-0.000373	-0.044388	0.0003746
10	0.0401021	0.0005981	0.0393567	0.0000290	-0.039400	-0.000337	-0.039421	0.0003383
9	0.0352025	0.0005310	0.0345445	0.0000235	-0.034514	-0.000301	-0.034532	0.0003016
8	0.0303862	0.0004632	0.0298142	0.0000182	-0.029717	-0.000264	-0.029733	0.0002645
7	0.0256619	0.0003950	0.0251777	0.0000129	-0.025023	-0.000226	-0.025036	0.0002270
6	0.0210451	0.0003265	0.0206487	0.0000077	-0.020446	-0.000189	-0.020457	0.0001893
5	0.0165551	0.0002581	0.0162463	0.0000029	-0.016010	-0.000151	-0.016018	0.0001515
4	0.0122248	0.0001906	0.0120017	-0.000001	-0.011752	-0.000114	-0.011756	0.0001138
3	0.0081205	0.0001255	0.0079786	-0.000004	-0.007746	-0.000077	-0.007750	0.0000770
2	0.0043943	0.0000664	0.0043237	-0.000005	-0.004151	-0.000042	-0.004153	0.0000425
1	0.0014192	0.0000204	0.0014000	-0.000003	-0.001323	-0.000014	-0.001324	0.0000140

Deprem yapı salınımı: x= 0.00143 y= 0.00145
Yapıda Deprem Perdesi bulunamadı.

STAA-CAD V11

FİRMA : | 03-23-2005

PROJE : kolonlukirişlisistem (kolonlukirişlisistem.ST4)

DEPREMDE YAPI DÜZENSİZLİKLERİNİN KONTROLU

A1,B2 düzensizliklerinin kontrolu
max(di/hi)=0.0035, 0.02/R =.0025
1. kat X dust = -.0014192 + -.0000204 x (.0 - 12.33=-.0011679 (S103)
1. kat X dalt = -.0014192 + -.0000204 x (24.95 - 12.33)=-.0016763 (S133)
2. kat X dust = -.0042943 + -.0000664 x (.0 - 12.33) - -.0011679 = -.0024076 (S210)
2. kat X dalt = -.0042943 + -.0000664 x (24.95 - 12.33) - -.0016763 = -.0025554 (S213)

X YÖNÜ (+45)

Kat	ΔX dust(m)	ΔX dalt(m)	ΔX ort	nbi	nki	ΔX/h	θi	kat tipi
40	0.0032578	0.0036547	0.0034562	1.06	0.00	0.00112	0.00781	Normal kat
39	0.0034230	0.0039042	0.0036636	1.07	1.06	0.00120	0.00900	Normal kat
38	0.0035948	0.0041727	0.0038837	1.07	1.06	0.00128	0.01027	Normal kat
37	0.0037518	0.0044242	0.0040880	1.08	1.05	0.00136	0.01159	Normal kat
36	0.0038890	0.0046479	0.0042685	1.09	1.04	0.00142	0.01294	Normal kat
35	0.0040077	0.0048443	0.0044260	1.09	1.04	0.00149	0.01429	Normal kat
34	0.0041100	0.0050160	0.0045630	1.10	1.03	0.00154	0.01563	Normal kat
33	0.0041980	0.0051664	0.0046822	1.10	1.03	0.00159	0.01695	Normal kat
32	0.0042738	0.0052986	0.0047862	1.11	1.02	0.00163	0.01822	Normal kat
31	0.0043288	0.0054149	0.0048768	1.11	1.02	0.00167	0.01946	Normal kat
30	0.0043944	0.0055176	0.0049560	1.11	1.02	0.00170	0.02066	Normal kat
29	0.0044411	0.0056076	0.0050244	1.12	1.01	0.00173	0.02182	Normal kat
28	0.0044785	0.0056859	0.0050827	1.12	1.01	0.00175	0.02295	Normal kat
27	0.0045097	0.0057531	0.0051314	1.12	1.01	0.00177	0.02404	Normal kat
26	0.0045321	0.0058098	0.0051710	1.12	1.01	0.00179	0.02508	Normal kat
25	0.0045473	0.0058571	0.0052022	1.13	1.01	0.00180	0.02608	Normal kat
24	0.0045555	0.0058955	0.0052255	1.13	1.00	0.00181	0.02703	Normal kat
23	0.0045578	0.0059266	0.0052422	1.13	1.00	0.00182	0.02793	Normal kat
22	0.0045543	0.0059506	0.0052525	1.13	1.00	0.00183	0.02878	Normal kat
21	0.0045457	0.0059687	0.0052572	1.14	1.00	0.00184	0.02956	Normal kat
20	0.0045320	0.0059811	0.0052565	1.14	1.00	0.00184	0.03029	Normal kat
19	0.0045131	0.0059878	0.0052505	1.14	1.00	0.00184	0.03095	Normal kat
18	0.0044888	0.0059886	0.0052387	1.14	1.00	0.00184	0.03154	Normal kat
17	0.0044590	0.0059836	0.0052213	1.15	1.00	0.00184	0.03205	Normal kat
16	0.0044236	0.0059726	0.0051981	1.15	1.00	0.00184	0.03250	Normal kat
15	0.0043824	0.0059552	0.0051688	1.15	0.99	0.00183	0.03287	Normal kat
14	0.0043348	0.0059305	0.0051326	1.16	0.99	0.00182	0.03316	Normal kat
13	0.0042804	0.0058982	0.0050893	1.16	0.99	0.00181	0.03337	Normal kat
12	0.0042188	0.0058574	0.0050381	1.16	0.99	0.00180	0.03350	Normal kat
11	0.0041490	0.0058071	0.0049781	1.17	0.99	0.00179	0.03356	Normal kat
10	0.0040702	0.0057457	0.0049079	1.17	0.99	0.00177	0.03353	Normal kat
9	0.0039816	0.0056721	0.0048269	1.18	0.98	0.00175	0.03341	Normal kat
8	0.0038826	0.0055849	0.0047338	1.18	0.98	0.00172	0.03319	Normal kat
7	0.0037720	0.0054809	0.0046265	1.18	0.98	0.00169	0.03284	Normal kat
6	0.0036464	0.0053527	0.0044996	1.19	0.97	0.00165	0.03232	Normal kat
5	0.0034974	0.0051822	0.0043398	1.19	0.96	0.00159	0.03153	Normal kat
4	0.0032019	0.0049245	0.0041134	1.20	0.95	0.00152	0.03023	Normal kat
3	0.0029969	0.0044721	0.0037345	1.20	0.91	0.00138	0.02779	Normal kat
2	0.0024076	0.0035554	0.0029815	1.19	0.80	0.00109	0.02252	Normal kat
1	0.0011679	0.0016763	0.0014221	1.18	0.48	0.00052	0.01094	Normal kat

STAA-CAD V11

FİRMA : | 03-23-2005

PROJE : kolonlukirişlisistem (kolonlukirişlisistem.ST4)

X YÖNÜ (-45)

Kat	ΔX üst(m)	ΔX alt(m)	ΔX ort	nbi	nki	ΔX/h	θi	kat tipi
40	0.0033866	0.0034801	0.0034333	1.01	0.00	0.00107	0.00775	Normal kat
39	0.0035910	0.0036822	0.0036366	1.01	1.06	0.00113	0.00893	Normal kat
38	0.0038038	0.0038990	0.0038514	1.01	1.06	0.00120	0.01019	Normal kat
37	0.0039994	0.0041014	0.0040504	1.01	1.05	0.00126	0.01149	Normal kat
36	0.0041714	0.0042808	0.0042261	1.01	1.04	0.00132	0.01281	Normal kat
35	0.0043209	0.0044272	0.0043791	1.01	1.04	0.00137	0.01414	Normal kat
34	0.0044508	0.0045734	0.0045121	1.01	1.03	0.00141	0.01546	Normal kat
33	0.0045637	0.0046915	0.0046276	1.01	1.03	0.00144	0.01675	Normal kat
32	0.0046623	0.0047942	0.0047282	1.01	1.02	0.00148	0.01800	Normal kat
31	0.0047485	0.0048838	0.0048162	1.01	1.02	0.00150	0.01922	Normal kat
30	0.0048235	0.0049612	0.0048924	1.01	1.02	0.00153	0.02040	Normal kat
29	0.0048885	0.0050282	0.0049584	1.01	1.01	0.00155	0.02154	Normal kat
28	0.0049437	0.0050851	0.0050144	1.01	1.01	0.00156	0.02264	Normal kat
27	0.0049896	0.0051322	0.0050609	1.01	1.01	0.00158	0.02371	Normal kat
26	0.0050278	0.0051702	0.0050986	1.01	1.01	0.00159	0.02473	Normal kat
25	0.0050588	0.0051997	0.0051278	1.01	1.01	0.00160	0.02571	Normal kat
24	0.0050777	0.0052215	0.0051496	1.01	1.00	0.00161	0.02664	Normal kat
23	0.0050926	0.0052366	0.0051646	1.01	1.00	0.00161	0.02752	Normal kat
22	0.0051014	0.0052458	0.0051734	1.01	1.00	0.00161	0.02834	Normal kat
21	0.0051046	0.0052484	0.0051765	1.01	1.00	0.00161	0.02911	Normal kat
20	0.0051025	0.0052462	0.0051743	1.01	1.00	0.00161	0.02981	Normal kat
19	0.0050958	0.0052386	0.0051663	1.01	1.00	0.00161	0.03045	Normal kat
18	0.0050829	0.0052254	0.0051537	1.01	1.00	0.00161	0.03102	Normal kat
17	0.0050633	0.0052053	0.0051348	1.01	1.00	0.00160	0.03152	Normal kat
16	0.0050290	0.0051816	0.0051103	1.01	1.00	0.00159	0.03195	Normal kat
15	0.0050087	0.0051505	0.0050796	1.01	0.99	0.00158	0.03230	Normal kat
14	0.0049717	0.0051126	0.0050422	1.01	0.99	0.00157	0.03257	Normal kat
13	0.0049277	0.0050675	0.0049976	1.01	0.99	0.00156	0.03277	Normal kat
12	0.0048758	0.0050145	0.0049452	1.01	0.99	0.00154	0.03289	Normal kat
11	0.0048153	0.0049528	0.0048840	1.01	0.99	0.00152	0.03293	Normal kat
10	0.0047448	0.0048810	0.0048129	1.01	0.99	0.00150	0.03288	Normal kat
9	0.0046637	0.0047982	0.0047310	1.01	0.98	0.00148	0.03275	Normal kat
8	0.0045712	0.0047034	0.0046373	1.01	0.98	0.00145	0.03252	Normal kat
7	0.0044656	0.0045937	0.0045297	1.01	0.98	0.00141	0.03216	Normal kat
6	0.0043429	0.0044634	0.0044032	1.01	0.97	0.00137	0.03163	Normal kat
5	0.0041925	0.0042978	0.0042452	1.01	0.96	0.00132	0.03085	Normal kat
4	0.0039856	0.0040614	0.0040235	1.01	0.95	0.00125	0.02957	Normal kat
3	0.0036435	0.0036667	0.0036551	1.00	0.91	0.00113	0.02720	Normal kat
2	0.0029484	0.0028982	0.0029233	1.01	0.80	0.00091	0.02208	Normal kat
1	0.0014406	0.0013585	0.0013996	1.03	0.48	0.00044	0.01077	Normal kat

Y YÖNÜ (+45)

Kat	ΔY sol(m)	ΔY sağ(m)	ΔY ort	nbi	nki	ΔY/h	θi	kat tipi
40	0.0035417	0.0037602	0.0036509	1.03	0.00	0.00116	0.00772	Normal kat
39	0.0037190	0.0040002	0.0038596	1.04	1.06	0.00123	0.00897	Normal kat
38	0.0039095	0.0042567	0.0040831	1.04	1.06	0.00131	0.01034	Normal kat
37	0.0040868	0.0044950	0.0042909	1.05	1.05	0.00138	0.01177	Normal kat
36	0.0042428	0.0047051	0.0044740	1.05	1.04	0.00145	0.01324	Normal kat
35	0.0043766	0.0048866	0.0046316	1.06	1.04	0.00150	0.01469	Normal kat
34	0.0044899	0.0050426	0.0047663	1.06	1.03	0.00155	0.01611	Normal kat
33	0.0045857	0.0051771	0.0048814	1.06	1.02	0.00159	0.01749	Normal kat
32	0.0046670	0.0052941	0.0049806	1.06	1.02	0.00163	0.01881	Normal kat
31	0.0047258	0.0053959	0.0050659	1.07	1.02	0.00166	0.02007	Normal kat
30	0.0047928	0.0054836	0.0051382	1.07	1.01	0.00169	0.02129	Normal kat
29	0.0048283	0.0055576	0.0051980	1.07	1.01	0.00171	0.02245	Normal kat
28	0.0048736	0.0056194	0.0052465	1.07	1.01	0.00173	0.02357	Normal kat
27	0.0048997	0.0056701	0.0052849	1.07	1.01	0.00174	0.02464	Normal kat
26	0.0049174	0.0057109	0.0053141	1.07	1.01	0.00176	0.02566	Normal kat
25	0.0049272	0.0057425	0.0053349	1.08	1.00	0.00177	0.02664	Normal kat
24	0.0049296	0.0057658	0.0053477	1.08	1.00	0.00177	0.02756	Normal kat
23	0.0049248	0.0057810	0.0053529	1.08	1.00	0.00178	0.02842	Normal kat
22	0.0049141	0.0057896	0.0053519	1.08	1.00	0.00178	0.02922	Normal kat
21	0.0048977	0.0057919	0.0053448	1.08	1.00	0.00178	0.02995	Normal kat
20	0.0048758	0.0057882	0.0053320	1.09	1.00	0.00178	0.03062	Normal kat
19	0.0048485	0.0057791	0.0053138	1.09	1.00	0.00178	0.03122	Normal kat
18	0.0048164	0.0057647	0.0052906	1.09	1.00	0.00177	0.03175	Normal kat
17	0.0047795	0.0057452	0.0052624	1.09	0.99	0.00177	0.03222	Normal kat
16	0.0047374	0.0057206	0.0052290	1.09	0.99	0.00176	0.03261	Normal kat
15	0.0046909	0.0056902	0.0051901	1.10	0.99	0.00175	0.03293	Normal kat
14	0.0046268	0.0056536	0.0051452	1.10	0.99	0.00174	0.03318	Normal kat
13	0.0045772	0.0056100	0.0050936	1.10	0.99	0.00173	0.03335	Normal kat
12	0.0045103	0.0055582	0.0050342	1.10	0.99	0.00171	0.03344	Normal kat
11	0.0044247	0.0054969	0.0049658	1.11	0.99	0.00169	0.03345	Normal kat
10	0.0043498	0.0054250	0.0048874	1.11	0.98	0.00167	0.03337	Normal kat
9	0.0042544	0.0053412	0.0047978	1.11	0.98	0.00164	0.03320	Normal kat
8	0.0041473	0.0052439	0.0046956	1.12	0.98	0.00161	0.03291	Normal kat
7	0.0040257	0.0051299	0.0045778	1.12	0.97	0.00158	0.03249	Normal kat
6	0.0038825	0.0049914	0.0044374	1.12	0.97	0.00154	0.03187	Normal kat
5	0.0037071	0.0048110	0.0042591	1.13	0.96	0.00148	0.03094	Normal kat
4	0.0034657	0.0045478	0.0040068	1.14	0.94	0.00140	0.02944	Normal kat
3	0.0030885	0.0041045	0.0035967	1.14	0.90	0.00126	0.02676	Normal kat
2	0.0024082	0.0032478	0.0028280	1.15	0.79	0.00100	0.02135	Normal kat
1	0.0011170	0.0015316	0.0013243	1.16	0.47	0.00047	0.01019	Normal kat

STAA-CAD V11

FİRMA :	03-23-2005
PROJE : kolonlukirişlisistem	(kolonlukirişlisistem.ST4)

Y YÖNÜ (-45)

Kat	ΔY sol(m)	ΔY sağ(m)	ΔY ort	nbi	nki	ΔY/h	θi	kat tipi
40	0.0037623	0.0035401	0.0036512	1.03	0.00	0.00116	0.00772	Normal kat
39	0.0040021	0.0037175	0.0038598	1.04	1.06	0.00123	0.00897	Normal kat
38	0.0042585	0.0039080	0.0040832	1.04	1.06	0.00131	0.01024	Normal kat
37	0.0044970	0.0040853	0.0042912	1.05	1.05	0.00138	0.01177	Normal kat
36	0.0047074	0.0042410	0.0044742	1.05	1.04	0.00145	0.01324	Normal kat
35	0.0048893	0.0043744	0.0046319	1.06	1.04	0.00150	0.01469	Normal kat
34	0.0050457	0.0044874	0.0047665	1.06	1.03	0.00155	0.01611	Normal kat
33	0.0051804	0.0045829	0.0048817	1.06	1.02	0.00159	0.01749	Normal kat
32	0.0052975	0.0046640	0.0049807	1.06	1.02	0.00162	0.01881	Normal kat
31	0.0053995	0.0047329	0.0050662	1.07	1.02	0.00166	0.02008	Normal kat
30	0.0054870	0.0047897	0.0051384	1.07	1.01	0.00169	0.02129	Normal kat
29	0.0055612	0.0048352	0.0051982	1.07	1.01	0.00171	0.02245	Normal kat
28	0.0056232	0.0048705	0.0052468	1.07	1.01	0.00173	0.02357	Normal kat
27	0.0056742	0.0048964	0.0052853	1.07	1.01	0.00175	0.02464	Normal kat
26	0.0057151	0.0049138	0.0053145	1.08	1.01	0.00176	0.02567	Normal kat
25	0.0057467	0.0049233	0.0053350	1.08	1.00	0.00177	0.02664	Normal kat
24	0.0057701	0.0049259	0.0053480	1.08	1.00	0.00178	0.02756	Normal kat
23	0.0057854	0.0049212	0.0053533	1.08	1.00	0.00178	0.02842	Normal kat
22	0.0057938	0.0049104	0.0053521	1.08	1.00	0.00178	0.02922	Normal kat
21	0.0057961	0.0048940	0.0053450	1.08	1.00	0.00178	0.02995	Normal kat
20	0.0057924	0.0048722	0.0053323	1.09	1.00	0.00178	0.03062	Normal kat
19	0.0057831	0.0048452	0.0053141	1.09	1.00	0.00178	0.03122	Normal kat
18	0.0057686	0.0048132	0.0052909	1.09	1.00	0.00177	0.03176	Normal kat
17	0.0057490	0.0047764	0.0052627	1.09	0.99	0.00177	0.03222	Normal kat
16	0.0057241	0.0047345	0.0052293	1.09	0.99	0.00176	0.03262	Normal kat
15	0.0056936	0.0046872	0.0051904	1.10	0.99	0.00175	0.03294	Normal kat
14	0.0056569	0.0046341	0.0051455	1.10	0.99	0.00174	0.03318	Normal kat
13	0.0056131	0.0045746	0.0050939	1.10	0.99	0.00172	0.03335	Normal kat
12	0.0055612	0.0045077	0.0050345	1.10	0.99	0.00171	0.03344	Normal kat
11	0.0054998	0.0044322	0.0049660	1.11	0.99	0.00169	0.03345	Normal kat
10	0.0054277	0.0043475	0.0048876	1.11	0.98	0.00167	0.03337	Normal kat
9	0.0053437	0.0042522	0.0047980	1.11	0.98	0.00164	0.03320	Normal kat
8	0.0052463	0.0041452	0.0046958	1.12	0.98	0.00161	0.03292	Normal kat
7	0.0051321	0.0040228	0.0045775	1.12	0.97	0.00158	0.03249	Normal kat
6	0.0049934	0.0038818	0.0044376	1.13	0.97	0.00154	0.03187	Normal kat
5	0.0048125	0.0037057	0.0042591	1.13	0.96	0.00148	0.03094	Normal kat
4	0.0045484	0.0034650	0.0040067	1.14	0.94	0.00140	0.02944	Normal kat
3	0.0041043	0.0030887	0.0035965	1.14	0.90	0.00126	0.02675	Normal kat
2	0.0032459	0.0024095	0.0028277	1.15	0.79	0.00100	0.02135	Normal kat
1	0.0015299	0.0011183	0.0013241	1.16	0.47	0.00047	0.01019	Normal kat

TDY 6.3.2.1 A1 burulma düzensizliği:
nbi=1.198 <1.2 , dinamik analizle çözülmüştür ✓
TDY 6.3.2.1 B2 düzensizliği sağlanmaktadır. ✓
TDY 6.20 koşulu sağlanmaktadır. .0018 < .0025 ✓
TDY 6.21 koşulu sağlanmaktadır. max θi=.034 < 0.12 ✓

ST4-CAD V11

FİRMA : 03-23-2005

PROJE : kolonlukirişlisistem (kolonlukirişlisistem.ST4)

B1-Düşey doğrultudaki düzensizliklerinin kontrolu

Kat	Aw	Agx	Agy	∑Aex	∑Aey	ncix	nciy	AÇIKLAMA
40	51.96	0.00	0.00	51.96	51.96	1.00	1.00	Üst kat ✓
39	51.96	0.00	0.00	51.96	51.96	1.00	1.00	Düzenli ✓
38	51.96	0.00	0.00	51.96	51.96	1.00	1.00	Düzenli ✓
37	51.96	0.00	0.00	51.96	51.96	1.00	1.00	Düzenli ✓
36	51.96	0.00	0.00	51.96	51.96	1.00	1.00	Düzenli ✓
35	51.96	0.00	0.00	51.96	51.96	1.00	1.00	Düzenli ✓
34	51.96	0.00	0.00	51.96	51.96	1.00	1.00	Düzenli ✓
33	51.96	0.00	0.00	51.96	51.96	1.00	1.00	Düzenli ✓
32	51.96	0.00	0.00	51.96	51.96	1.00	1.00	Düzenli ✓
31	51.96	0.00	0.00	51.96	51.96	1.00	1.00	Düzenli ✓
30	51.96	0.00	0.00	51.96	51.96	1.00	1.00	Düzenli ✓
29	51.96	0.00	0.00	51.96	51.96	1.00	1.00	Düzenli ✓
28	51.96	0.00	0.00	51.96	51.96	1.00	1.00	Düzenli ✓
27	51.96	0.00	0.00	51.96	51.96	1.00	1.00	Düzenli ✓
26	51.96	0.00	0.00	51.96	51.96	1.00	1.00	Düzenli ✓
25	51.96	0.00	0.00	51.96	51.96	1.00	1.00	Düzenli ✓
24	51.96	0.00	0.00	51.96	51.96	1.00	1.00	Düzenli ✓
23	51.96	0.00	0.00	51.96	51.96	1.00	1.00	Düzenli ✓
22	51.96	0.00	0.00	51.96	51.96	1.00	1.00	Düzenli ✓
21	51.96	0.00	0.00	51.96	51.96	1.00	1.00	Düzenli ✓
20	51.96	0.00	0.00	51.96	51.96	1.00	1.00	Düzenli ✓
19	51.96	0.00	0.00	51.96	51.96	1.00	1.00	Düzenli ✓
18	51.96	0.00	0.00	51.96	51.96	1.00	1.00	Düzenli ✓
17	51.96	0.00	0.00	51.96	51.96	1.00	1.00	Düzenli ✓
16	51.96	0.00	0.00	51.96	51.96	1.00	1.00	Düzenli ✓
15	51.96	0.00	0.00	51.96	51.96	1.00	1.00	Düzenli ✓
14	51.96	0.00	0.00	51.96	51.96	1.00	1.00	Düzenli ✓
13	51.96	0.00	0.00	51.96	51.96	1.00	1.00	Düzenli ✓
12	51.96	0.00	0.00	51.96	51.96	1.00	1.00	Düzenli ✓
11	51.96	0.00	0.00	51.96	51.96	1.00	1.00	Düzenli ✓
10	51.96	0.00	0.00	51.96	51.96	1.00	1.00	Düzenli ✓
9	51.96	0.00	0.00	51.96	51.96	1.00	1.00	Düzenli ✓
8	51.96	0.00	0.00	51.96	51.96	1.00	1.00	Düzenli ✓
7	51.96	0.00	0.00	51.96	51.96	1.00	1.00	Düzenli ✓
6	51.96	0.00	0.00	51.96	51.96	1.00	1.00	Düzenli ✓
5	51.96	0.00	0.00	51.96	51.96	1.00	1.00	Düzenli ✓
4	51.96	0.00	0.00	51.96	51.96	1.00	1.00	Düzenli ✓
3	51.96	0.00	0.00	51.96	51.96	1.00	1.00	Düzenli ✓
2	51.96	0.00	0.00	51.96	51.96	1.00	1.00	Düzenli ✓
1	51.96	0.00	0.00	51.96	51.96	1.00	1.00	Düzenli ✓

TDY97 A4 düzensizliği :
A4 düzensizliği bulunmamıştır. ✓

STAA-CAD V11

FİRMA :	03-23-2005
PROJE : kolonlukirişlisistem	(kolonlukirişlisistem.ST4)

MODAL ANALİZ MOD GRAFİĞİ (1000 x Dep. vektörü)

X yönü

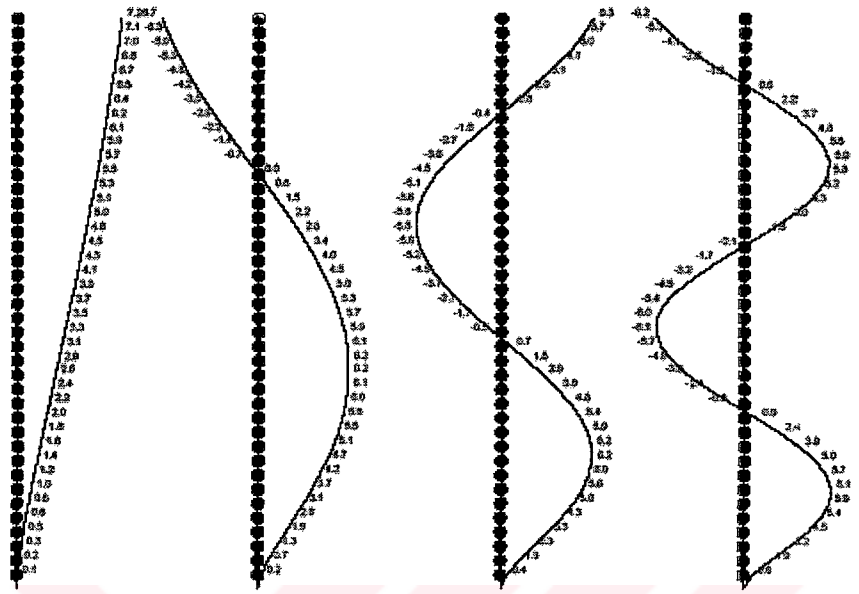

1. MOD 2. MOD 3. MOD 4. MOD

Y yönü

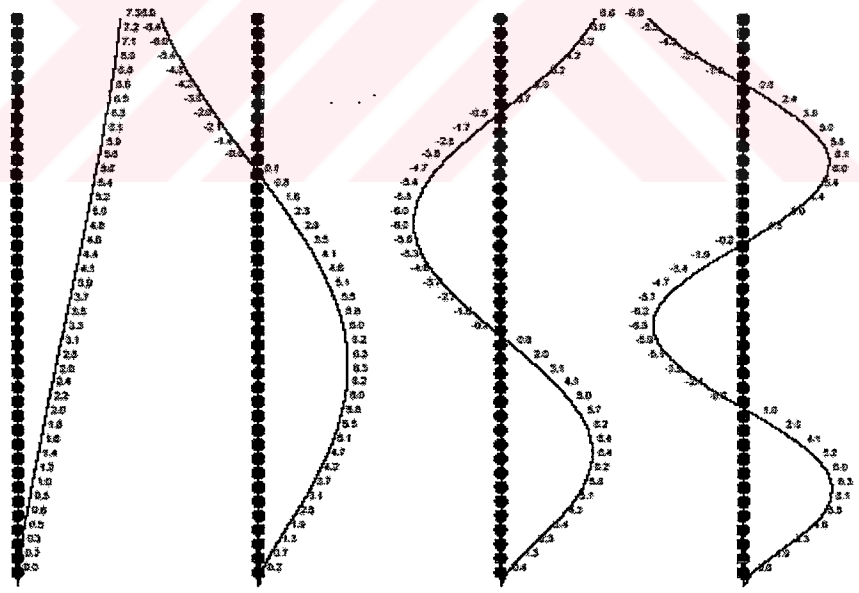

1. MOD 2. MOD 3. MOD 4. MOD

STAA-CAD V11

FİRMA : | 03-23-2005

PROJE : kolonlukirişlisistem (kolonlukirişlisistem.ST4)

K101
Bw/D= 50/ 90 I= 1 J= 3 Tabla : B2/D2= 9/ 26cm

KOMBİNASYON	SolM (tm)	SağM (tm)	SolVd (t)	SağVd (t)
1.(G+G+G+G)	4.10	0.90	3.36	0.27
2.(Q+Q+Q+Q)	0.42	0.36	0.28	0.28
3.(o+Q+o+Q)	0.24	0.16	0.14	0.14
4.(Q+o+Q+o)	0.19	0.20	0.14	0.14
5.(Q+Q+o+Q)	0.25	0.22	0.17	0.17
6.(o+Q+Q+o)	0.31	0.24	0.19	0.19
7.(o+o+Q+Q)	0.30	0.27	0.21	0.21
Zemin itkisi	0.00	0.00	0.00	0.00
X-Deprem+%5	-57.52	-54.51	-40.01	-40.01
X-Deprem-%5	-70.21	-66.90	-48.97	-48.97
Y-Deprem+%5	-16.14	-15.86	-11.43	-11.43
Y-Deprem-%5	-1.08	-1.14	-0.80	-0.80
X-Rüzgar+%5	-11.28	-10.78	-7.92	-7.92
X-Rüzgar-%5	-13.91	-13.25	-9.70	-9.70
Y-Rüzgar+%5	-3.82	-3.76	-2.71	-2.71
Y-Rüzgar-%5	-0.27	-0.28	-0.20	-0.20

MATERIAL:EI BS20 CS420 Fk: 11.06 0.00 cm²

BETONARME :	üstMsol	altMsol	Mac.	üstMsağ	altMsağ
Mdus. (tm) :	-31.56	27.57	(2.80m)	31.99	-31.47
max M (tm) :	74.73	-66.52	1.58	-66.09	68.16
fcd (kg/cm²) :	200.00	200.00	200.00	200.00	200.00
As' (cm²) :	0.00	0.00	0.00	0.00	0.00
As (cm²) :	14.78	12.90	11.82	14.78	12.14

DONATI: 4ø14(mon.)+6ø16(göv.)+3ø20(sol üst ila.)+6ø20(sağ üst ila.)
4ø20(düz)+1ø14(sol alt ila.)+ 2xø14/15(etriye)

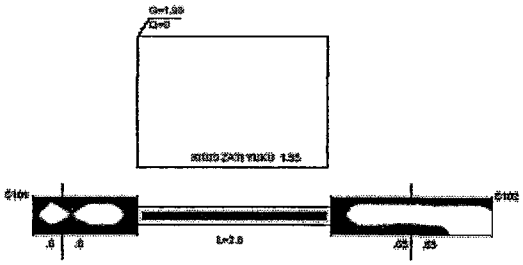

K102
Bw/D= 50/ 80 I= 3 J= 8 Tabla : B2/D2= 18/ 26cm

KOMBİNASYON	SolM (tm)	SağM (tm)	SolVd (t)	SağVd (t)
1.(G+G+G+G)	5.45	-3.86	4.50	-3.90
2.(Q+Q+Q+Q)	0.56	-0.37	0.45	-0.37
3.(o+Q+o+Q)	0.54	-0.36	0.44	-0.37
4.(Q+o+Q+o)	0.05	0.02	0.02	0.02
5.(Q+Q+o+Q)	0.56	-0.35	0.45	-0.36
6.(o+Q+Q+o)	0.54	-0.39	0.44	-0.38
7.(o+o+Q+Q)	0.07	0.06	0.03	0.03
Zemin itkisi	0.00	0.00	0.00	0.00
X-Deprem+%5	-65.31	-63.11	-30.54	-30.54
X-Deprem-%5	-81.56	-78.93	-38.17	-38.17
Y-Deprem+%5	-7.18	-7.09	-3.39	-3.39
Y-Deprem-%5	12.12	11.69	5.66	5.66
X-Rüzgar+%5	-12.82	-12.29	-6.00	-6.00
X-Rüzgar-%5	-16.05	-15.53	-7.51	-7.51
Y-Rüzgar+%5	-1.67	-1.65	-0.79	-0.79
Y-Rüzgar-%5	2.88	2.78	1.35	1.35

MATERIAL:EI BS20 CS420 Fk: 8.85 8.91 cm²

BETONARME :	üstMsol	altMsol	Mac.	üstMsağ	altMsağ
Mdus. (tm) :	-28.03	22.18	(2.23m)	23.34	-19.06
max M (tm) :	97.58	-78.66	2.11	-83.19	75.46
fcd (kg/cm²) :	200.00	200.00	200.00	200.00	200.00
As' (cm²) :	0.00	0.00	0.00	0.00	0.00
As (cm²) :	22.94	20.50	10.57	23.07	21.26

DONATI: 4ø14(mon.)+8ø16(göv.)+6ø20(sağ üst ila.)
4ø20(düz)+3ø20(sol alt ila.)+3ø20(sağ alt ila.)+ 2xø10/11(etriye)

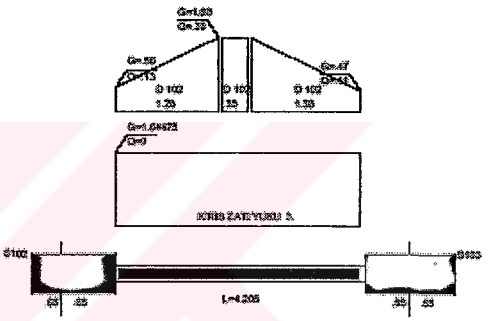

K103
Bw/D= 50/ 80 I= 8 J= 17 Tabla : B2/D2= 18/ 26cm

KOMBİNASYON	SolM (tm)	SağM (tm)	SolVd (t)	SağVd (t)
1.(G+G+G+G)	3.98	-5.43	3.91	-4.49
2.(Q+Q+Q+Q)	0.37	-0.56	0.37	-0.45
3.(o+Q+o+Q)	-0.02	-0.04	-0.01	-0.01
4.(Q+o+Q+o)	0.36	-0.55	0.37	-0.45
5.(Q+Q+o+Q)	-0.04	-0.06	-0.02	-0.02
6.(o+Q+Q+o)	0.37	-0.55	0.37	-0.44
7.(o+o+Q+Q)	0.35	-0.56	0.36	-0.45
Zemin itkisi	0.00	0.00	0.00	0.00
X-Deprem+%5	-62.10	-65.30	-30.54	-30.54
X-Deprem-%5	-78.92	-81.56	-38.16	-38.16
Y-Deprem+%5	-11.77	-12.20	-5.70	-5.70
Y-Deprem-%5	7.02	7.10	3.36	3.36
X-Rüzgar+%5	-12.29	-12.82	-6.00	-6.00
X-Rüzgar-%5	-15.53	-16.05	-7.51	-7.51
Y-Rüzgar+%5	-2.81	-2.91	-1.36	-1.36
Y-Rüzgar-%5	1.62	1.64	0.78	0.78

MATERIAL:EI BS20 CS420 Fk: 7.76 10.10 cm²

BETONARME :	üstMsol	altMsol	Mac.	üstMsağ	altMsağ
Mdus. (tm) :	-22.34	19.06	(2.00m)	28.02	-22.18
max M (tm) :	83.18	-75.43	2.10	-87.55	76.67
fcd (kg/cm²) :	200.00	200.00	200.00	200.00	200.00
As' (cm²) :	0.00	0.00	0.00	0.00	0.00
As (cm²) :	23.06	21.25	10.57	22.33	20.51

DONATI: 4ø14(mon.)+8ø16(göv.)+6ø20(sağ üst ila.)
4ø20(düz)+3ø20(sağ alt ila.)+ 2xø10/11(etriye)

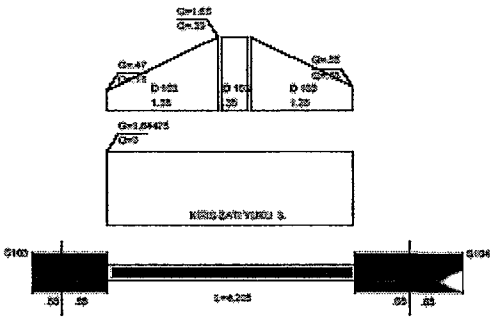

STAA-99 V11

FİRMA : | 03-23-2005

PROJE : kolonlukirişlisistem (kolonlukirişlisistem.ST4)

K104
Bw/D= 50/ 90 I= 17 J= 33 Tabla : B2/D2= 9/ 26cm

KOMBİNASYON	SolM (tm)	SağM (tm)	SolVd (t)	SağVd (t)
1.(G+G+G+G)	-8.87	-4.06	-0.25	-3.33
2.(Q+Q+Q+Q)	-0.35	-0.42	-0.27	-0.27
3.(o+Q+o+Q)	-0.20	-0.20	-0.14	-0.14
4.(Q+o+Q+o)	-0.16	-0.23	-0.14	-0.14
5.(Q+Q+o+Q)	-0.26	-0.30	-0.20	-0.20
6.(o+Q+Q+o)	-0.21	-0.29	-0.18	-0.18
7.(o+o+Q+Q)	-0.24	-0.27	-0.18	-0.18
Zemin itkisi	0.00	0.00	0.00	0.00
X-Deprem+%5	-54.46	-57.42	-39.96	-39.96
X-Deprem-%5	-66.86	-70.09	-48.91	-48.91
Y-Deprem+%5	1.06	0.99	0.73	0.73
Y-Deprem-%5	15.77	16.04	11.36	11.36
X-Rüzgar+%5	-10.78	-11.36	-7.91	-7.91
X-Rüzgar-%5	-13.24	-13.89	-9.69	-9.69
Y-Rüzgar+%5	0.26	0.24	0.18	0.18
Y-Rüzgar-%5	3.74	3.80	2.69	2.69

MATERIAL:El BS30 CS420 Fk: 0.00 11.90 cm²

BETONARME :	üstMsol	altMsol	Max.	üstMsağ	altMsağ
Mdus. (tm) :	-31.94	31.45	(0.00m)	31.51	-27.55
max M (tm) :	66.08	-68.07	1.53	-74.58	66.44
fcd (kg/cm²) :	200.00	200.00	200.00	200.00	200.00
As' (cm²) :	0.00	0.00	0.00	0.00	0.00
As (cm²) :	14.78	12.11	11.82	14.78	12.68

DONATI: 4ø14(mon.)+8ø16(gör.)+3ø20(sag üst ila.)
4ø20(dün)+1ø14(sağ alt ila.)+ 2xø14/15(etriye)

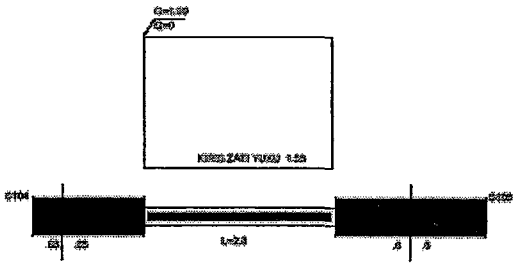

K105
Bw/D= 50/ 80 I= 4 J= 1 Tabla : B2/D2= 19/ 26cm

KOMBİNASYON	SolM (tm)	SağM (tm)	SolVd (t)	SağVd (t)
1.(G+G+G+G)	3.09	-8.11	3.79	-6.49
2.(Q+Q+Q+Q)	0.36	-0.98	0.42	-0.80
3.(o+Q+o+Q)	0.42	-0.91	0.45	-0.77
4.(Q+o+Q+o)	-0.11	-0.13	-0.06	-0.06
5.(Q+Q+o+Q)	-0.15	-0.17	-0.08	-0.08
6.(o+Q+Q+o)	0.38	-0.95	0.43	-0.79
7.(o+o+Q+Q)	0.39	-0.95	0.43	-0.79
Zemin itkisi	0.00	0.00	0.00	0.00
X-Deprem+%5	-60.26	-61.25	-28.62	-28.62
X-Deprem-%5	-74.43	-76.14	-35.47	-35.47
Y-Deprem+%5	-5.47	-5.55	-2.57	-2.57
Y-Deprem-%5	11.46	12.13	5.56	5.56
X-Rüzgar+%5	-11.95	-12.14	-5.67	-5.67
X-Rüzgar-%5	-14.77	-15.10	-7.04	-7.04
Y-Rüzgar+%5	-1.27	-1.32	-0.61	-0.61
Y-Rüzgar-%5	2.70	2.86	1.31	1.31

MATERIAL:El BS30 CS420 Fk: 5.51 11.30 cm²

BETONARME :	üstMsol	altMsol	Max.	üstMsağ	altMsağ
Mdus. (tm) :	-21.82	17.63	(1.87m)	25.65	-17.78
max M (tm) :	77.94	-71.66	2.64	-85.23	68.84
fcd (kg/cm²) :	200.00	200.00	200.00	200.00	200.00
As' (cm²) :	0.00	0.00	0.00	0.00	0.00
As (cm²) :	21.53	20.31	10.57	22.95	19.15

DONATI: 4ø14(mon.)+8ø16(gör.)+5ø20(sol üst ila.)+6ø20(sag üst ila.)
4ø20(dün)+3ø20(sol alt ila.)+3ø20(sağ alt ila.)+ 2xø10/11(etriye)

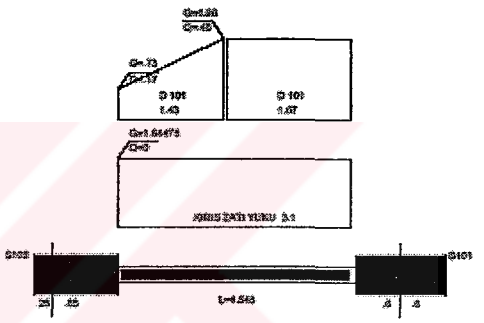

K106
Bw/D= 50/ 80 I= 23 J= 32 Tabla : B2/D2= 19/ 26cm

KOMBİNASYON	SolM (tm)	SağM (tm)	SolVd (t)	SağVd (t)
1.(G+G+G+G)	8.08	-3.11	6.46	-3.80
2.(Q+Q+Q+Q)	0.97	-0.37	0.80	-0.42
3.(o+Q+o+Q)	0.14	0.12	0.06	0.06
4.(Q+o+Q+o)	0.59	-0.43	0.76	-0.46
5.(Q+Q+o+Q)	0.93	-0.40	0.78	-0.44
6.(o+Q+Q+o)	0.94	-0.40	0.78	-0.43
7.(o+o+Q+Q)	0.19	0.17	0.08	0.08
Zemin itkisi	0.00	0.00	0.00	0.00
X-Deprem+%5	-61.20	-68.25	-28.61	-28.61
X-Deprem-%5	-76.10	-74.43	-35.46	-35.46
Y-Deprem+%5	-12.16	-11.49	-5.57	-5.57
Y-Deprem-%5	5.52	5.34	2.56	2.56
X-Rüzgar+%5	-12.12	-11.95	-5.67	-5.67
X-Rüzgar-%5	-15.09	-14.77	-7.03	-7.03
Y-Rüzgar+%5	-2.87	-2.71	-1.32	-1.32
Y-Rüzgar-%5	1.31	1.26	0.60	0.60

MATERIAL:El BS30 CS420 Fk: 9.49 6.81 cm²

BETONARME :	üstMsol	altMsol	Max.	üstMsağ	altMsağ
Mdus. (tm) :	-25.63	17.79	(2.40m)	21.82	-17.62
max M (tm) :	85.15	-68.83	2.64	-77.97	71.63
fcd (kg/cm²) :	200.00	200.00	200.00	200.00	200.00
As' (cm²) :	0.00	0.00	0.00	0.00	0.00
As (cm²) :	22.93	19.14	10.57	21.54	20.30

DONATI: 4ø14(mon.)+8ø16(gör.)+6ø20(sol üst ila.)+5ø20(sag üst ila.)
4ø20(dün)+3ø20(sol alt ila.)+3ø20(sağ alt ila.)+ 2xø10/11(etriye)

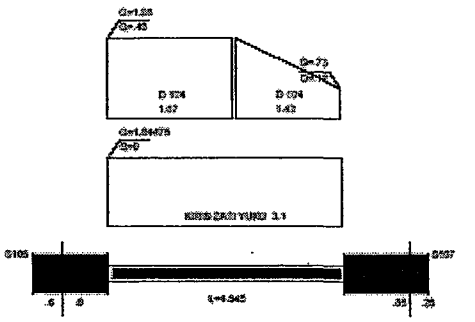

STAA-CAD V11

FİRMA : | 03-23-2005

PROJE : kolonlukirişlisistem (kolonlukirişlisistem.ST4)

K107
Bw/D= 50/ 90 I= 9 J= 18 Tabla : B1/D1= 44/ 26cm B2/D2= 44/ 26cm

KOMBİNASYON	SolM (tm)	SağM (tm)	SolVd (t)	SağVd (t)
1.(G+G+G+G)	22.46	9.39	13.55	-0.08
2.(Q+Q+Q+Q)	4.04	1.52	2.44	-0.16
3.(o+Q+o+Q)	4.09	1.62	2.48	-0.13
4.(Q+o+Q+o)	-0.02	-0.08	-0.02	-0.02
5.(Q+Q+o+Q)	-0.07	-0.09	-0.04	-0.04
6.(o+Q+Q+o)	4.07	1.59	2.47	-0.14
7.(o+o+Q+Q)	4.11	1.57	2.47	-0.13
Zemin itkisi	0.00	0.00	0.00	0.00
X-Deprem+%5	-67.72	-8.67	-18.16	-18.16
X-Deprem-%5	-77.54	-10.26	-20.90	-20.90
Y-Deprem+%5	13.91	17.54	7.48	7.48
Y-Deprem-%5	25.57	19.55	10.72	10.72
X-Rüzgar+%5	-13.40	-1.71	-3.59	-3.59
X-Rüzgar-%5	-15.36	-2.04	-4.14	-4.14
Y-Rüzgar+%5	2.41	4.27	1.83	1.83
Y-Rüzgar-%5	6.17	4.74	2.59	2.59
MATERIAL:E1	BS30	CS420 Fk:	9.27	10.05 cm²

BETONARME :	üstMsol	altMsol	Mac.	üstMsağ	altMsağ
Mdur. (tm) :	-21.49	5.99	(4.14m)	0.00	0.00
max M (tm) :	104.11	-57.23	15.75	-11.09	20.55
fcd (kg/cm²) :	200.00	200.00	200.00	200.00	200.00
As' (cm²) :	0.00	0.00	0.00	0.00	0.00
As (cm²) :	28.69	16.92	11.82	4.69	9.98

DONATI: 5ø14(mon.)+4ø16(göv.)+7ø20(sol üst ila.)
4ø20(dün)+2ø20(sol alt ila.)+ 2xø10/20/11(etriye)

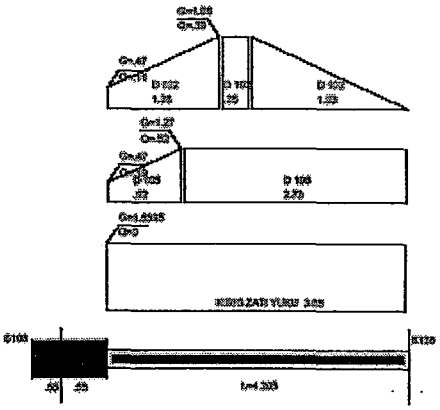

K107
Bw/D= 50/ 90 I= 18 J= 34 Tabla : B1/D1= 44/ 26cm B2/D2= 44/ 26cm

KOMBİNASYON	SolM (tm)	SağM (tm)	SolVd (t)	SağVd (t)
1.(G+G+G+G)	-9.39	-22.44	0.08	-13.55
2.(Q+Q+Q+Q)	-1.52	-4.04	0.16	-2.44
3.(o+Q+o+Q)	-1.60	-4.09	0.13	-2.48
4.(Q+o+Q+o)	0.07	0.03	0.02	0.02
5.(Q+Q+o+Q)	0.10	0.07	0.04	0.04
6.(o+Q+Q+o)	-1.59	-4.07	0.14	-2.47
7.(o+o+Q+Q)	-1.58	-4.11	0.13	-2.48
Zemin itkisi	0.00	0.00	0.00	0.00
X-Deprem+%5	-8.66	-67.71	-18.16	-18.16
X-Deprem-%5	-10.36	-77.54	-20.90	-20.90
Y-Deprem+%5	-19.56	-25.62	-10.74	-10.74
Y-Deprem-%5	-17.55	-13.95	-7.49	-7.49
X-Rüzgar+%5	-1.71	-13.40	-3.59	-3.59
X-Rüzgar-%5	-2.04	-15.36	-4.14	-4.14
Y-Rüzgar+%5	-4.74	-6.19	-2.60	-2.60
Y-Rüzgar-%5	-4.27	-3.43	-1.83	-1.83
MATERIAL:E1	BS30	CS420 Fk:	9.75	9.66 cm²

BETONARME :	üstMsol	altMsol	Mac.	üstMsağ	altMsağ
Mdur. (tm) :	0.00	0.00	(0.08m)	21.50	-5.99
max M (tm) :	11.11	-20.55	15.80	-104.09	57.35
fcd (kg/cm²) :	200.00	200.00	200.00	200.00	200.00
As' (cm²) :	0.00	0.00	0.00	0.00	0.00
As (cm²) :	4.69	9.98	11.82	28.69	16.93

DONATI: 5ø14(mon.)+4ø16(göv.)+7ø20(sag üst ila.)
4ø20(dün)+2ø20(sağ alt ila.)+ 2xø10/20/11(etriye)

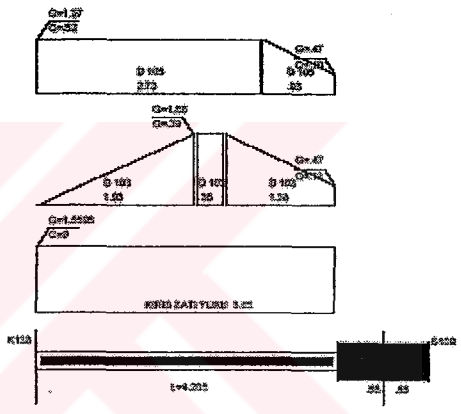

K108
Bw/D= 50/ 90 I= 20 J= 10 Tabla : B2/D2= 39/ 26cm

KOMBİNASYON	SolM (tm)	SağM (tm)	SolVd (t)	SağVd (t)
1.(G+G+G+G)	22.49	11.61	14.25	4.85
2.(Q+Q+Q+Q)	3.17	1.55	1.87	0.74
3.(o+Q+o+Q)	3.19	1.67	1.92	0.75
4.(Q+o+Q+o)	-0.10	-0.11	-0.07	-0.07
5.(Q+Q+o+Q)	-0.12	-0.12	-0.08	-0.08
6.(o+Q+Q+o)	3.17	1.64	1.90	0.76
7.(o+o+Q+Q)	3.14	1.59	1.87	0.74
Zemin itkisi	0.00	0.00	0.00	0.00
X-Deprem+%5	-62.70	3.35	-18.84	-18.84
X-Deprem-%5	-74.67	-0.94	-24.00	-24.00
Y-Deprem+%5	15.14	13.95	9.23	9.23
Y-Deprem-%5	29.36	19.02	15.36	15.36
X-Rüzgar+%5	-12.43	0.76	-3.70	-3.70
X-Rüzgar-%5	-14.80	-0.09	-4.73	-4.73
Y-Rüzgar+%5	3.64	3.40	2.23	2.23
Y-Rüzgar-%5	6.98	4.60	3.67	3.67
MATERIAL:E1	BS30	CS420 Fk:	6.65	22.82 cm²

BETONARME :	üstMsol	altMsol	Mac.	üstMsağ	altMsağ
Mdur. (tm) :	-27.52	10.15	(3.15m)	0.00	0.00
max M (tm) :	100.35	-54.44	18.92	-8.59	32.31
fcd (kg/cm²) :	200.00	200.00	200.00	200.00	200.00
As' (cm²) :	0.00	0.00	0.00	0.00	0.00
As (cm²) :	25.05	14.57	11.82	3.62	10.57

DONATI: 4ø14(mon.)+4ø16(göv.)+7ø20(sol üst ila.)
4ø20(dün)+1ø16(sol alt ila.)+ 2xø10/20/11(etriye)

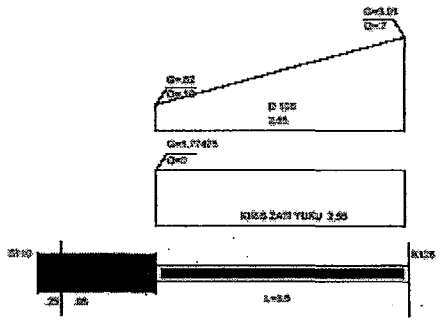

STAA-CAD V11

FİRMA : | 03-23-2005

PROJE : kolonlukirişlisistem (kolonlukirişlisistem.ST4)

K108
Bw/D= 50/ 90 I= 10 J= 21 Tabla : B1/D1= 39/ 26cm B2/D2= 39/ 26cm

KOMBİNASYON	SolM (tm)	SağM (tm)	SolVd (t)	SağVd (t)
1.(G+G+G+G)	-18.66	-34.87	4.02	-21.82
2.(Q+Q+Q+Q)	-1.35	-5.54	0.94	-3.64
3.(o+Q+o+Q)	-1.49	-5.61	0.90	-3.69
4.(Q+o+Q+o)	0.11	-0.04	0.02	0.02
5.(Q+Q+o+Q)	0.12	0.02	0.03	0.03
6.(o+Q+Q+o)	-1.46	-5.59	0.91	-3.68
7.(o+o+Q+Q)	-1.42	-5.72	0.89	-3.70
Zemin itkisi	0.00	0.00	0.00	0.00
X-Deprem+%5	-18.39	-74.07	-20.34	-20.34
X-Deprem-%5	-17.01	-78.92	-21.11	-21.11
Y-Deprem+%5	-14.42	-15.84	-6.66	-6.66
Y-Deprem-%5	-16.06	-19.08	-5.75	-5.75
X-Rüzgar+%5	-3.74	-14.86	-4.09	-4.09
X-Rüzgar-%5	-3.46	-15.81	-4.24	-4.24
Y-Rüzgar+%5	-3.52	-3.92	-1.64	-1.64
Y-Rüzgar-%5	-2.91	-2.56	-1.42	-1.42

MATERIAL:E1 BS30 CS420 Fk: 9.70 16.06 cm²

BETONARME :	üstMsol	altMsol	Mac.	üstMsağ	altMsağ
Mdur. (tm) :	0.00	0.00	(0.82m)	28.12	-1.06
max M (tm) :	8.80	-20.54	20.42	-119.52	47.54
fcd (kg/cm²) :	200.00	200.00	200.00	200.00	200.00
As' (cm²) :	0.00	0.00	0.00	0.00	0.00
As (cm²) :	2.71	9.94	11.82	32.03	16.02

DONATI: 4ø16(mon.)+4ø16(gör.)+8ø20(sag üst ila.)
4ø20(dür)+2ø16(sağ alt ila.)+ 2xø10/20/13(etriye)

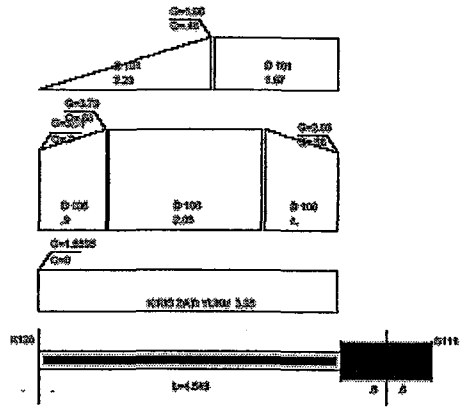

K109
Bw/D= 50/ 90 I= 21 J= 19 Tabla : B1/D1= 12/ 26cm B2/D2= 12/ 26cm

KOMBİNASYON	SolM (tm)	SağM (tm)	SolVd (t)	SağVd (t)
1.(G+G+G+G)	12.44	2.24	7.86	1.89
2.(Q+Q+Q+Q)	1.75	0.37	1.01	0.53
3.(o+Q+o+Q)	0.73	-0.14	0.47	-0.02
4.(Q+o+Q+o)	1.04	0.52	0.55	0.55
5.(Q+Q+o+Q)	1.06	0.50	0.56	0.56
6.(o+Q+Q+o)	0.73	-0.13	0.47	-0.02
7.(o+o+Q+Q)	1.75	0.35	1.02	0.54
Zemin itkisi	0.00	0.00	0.00	0.00
X-Deprem+%5	-57.67	-24.42	-29.32	-29.32
X-Deprem-%5	-64.55	-27.45	-33.00	-33.00
Y-Deprem+%5	8.32	3.04	4.06	4.06
Y-Deprem-%5	16.96	6.64	8.43	8.42
X-Rüzgar+%5	-11.49	-4.87	-5.84	-5.84
X-Rüzgar-%5	-12.94	-5.47	-6.58	-6.58
Y-Rüzgar+%5	2.11	0.78	1.03	1.03
Y-Rüzgar-%5	4.16	1.63	2.07	2.07

MATERIAL:E1 BS30 CS420 Fk: 6.51 0.00 cm²

BETONARME :	üstMsol	altMsol	Mac.	üstMsağ	altMsağ
Mdur. (tm) :	-25.12	15.56	(2.80m)	0.00	0.00
max M (tm) :	79.14	-53.76	0.00	-25.42	30.21
fcd (kg/cm²) :	200.00	200.00	0.00	200.00	200.00
As' (cm²) :	0.00	0.00	0.00	0.00	0.00
As (cm²) :	18.24	12.57	0.00	10.88	9.69

DONATI: 4ø14(mon.)+4ø16(gör.)+2ø20(sag üst ila.)
4ø16(dür)+1ø16(sağ alt ila.)+ 2xø10/20/11(etriye)

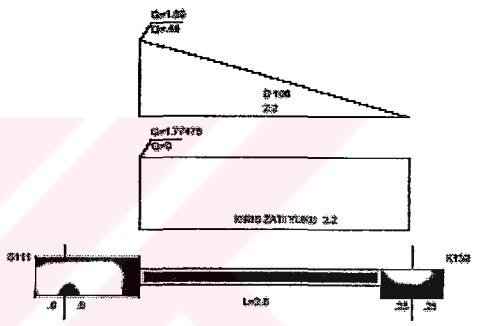

K110
Bw/D= 50/ 90 I= 52 J= 80 Tabla : B1/D1= 12/ 26cm B2/D2= 12/ 26cm

KOMBİNASYON	SolM (tm)	SağM (tm)	SolVd (t)	SağVd (t)
1.(G+G+G+G)	-2.24	-12.43	-1.89	-7.86
2.(Q+Q+Q+Q)	-0.37	-1.74	-0.52	-1.01
3.(o+Q+o+Q)	0.14	-0.37	-0.08	-0.08
4.(Q+o+Q+o)	-0.52	-1.39	-0.45	-0.93
5.(Q+Q+o+Q)	-0.50	-1.41	-0.45	-0.94
6.(o+Q+Q+o)	0.14	-0.72	0.02	-0.46
7.(o+o+Q+Q)	-0.40	-1.39	-0.64	-0.64
Zemin itkisi	0.00	0.00	0.00	0.00
X-Deprem+%5	-24.42	-57.68	-29.32	-29.32
X-Deprem-%5	-27.45	-64.96	-33.00	-33.00
Y-Deprem+%5	-6.65	-16.99	-8.44	-8.44
Y-Deprem-%5	-2.05	-8.34	-4.07	-4.07
X-Rüzgar+%5	-4.87	-11.49	-5.84	-5.84
X-Rüzgar-%5	-5.47	-12.95	-6.58	-6.58
Y-Rüzgar+%5	-1.63	-4.17	-2.07	-2.07
Y-Rüzgar-%5	-0.78	-2.12	-1.04	-1.04

MATERIAL:E1 BS30 CS420 Fk: 0.00 8.36 cm²

BETONARME :	üstMsol	altMsol	Mac.	üstMsağ	altMsağ
Mdur. (tm) :	0.00	0.00	(0.00m)	25.12	-15.56
max M (tm) :	25.43	-20.21	0.00	-79.12	53.77
fcd (kg/cm²) :	200.00	200.00	0.00	200.00	200.00
As' (cm²) :	0.00	0.00	0.00	0.00	0.00
As (cm²) :	10.88	9.89	0.00	18.24	12.57

DONATI: 4ø16(mon.)+4ø16(gör.)+1ø20(sol üst ila.)+8ø20(sag üst ila.)
4ø16(dür)+1ø16(sol alt ila.)+2ø16(sağ alt ila.)+ 2xø10/20/11(etriye)

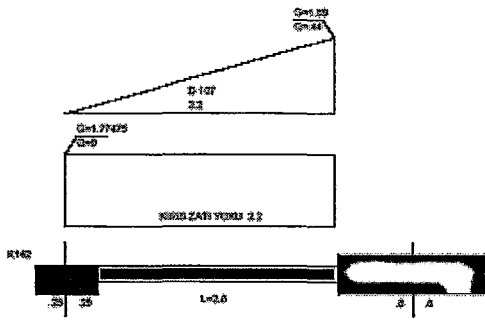

STAA-CAD V11

FİRMA : ILKON MUHENDISL	03-23-2005	SAYFA: 52
PROJE : kolonlukirişlisistem		(kolonlukirişlisistem.ST4)

K111
Bw/D= 50/ 90 I= 80 J= 79 Tabla : B1/D1= 39/ 26cm B2/D2= 39/ 26cm

KOMBİNASYON	SolM (tm)	SağM (tm)	SolVd (t)	SağVd (t)
1.(G+G+G+G)	34.89	10.68	21.81	-4.04
2.(Q+Q+Q+Q)	5.55	1.36	3.64	-0.95
3.(o+Q+o+Q)	5.58	1.49	3.68	-0.91
4.(Q+o+Q+o)	0.07	-0.10	-0.01	-0.01
5.(Q+Q+o+Q)	0.00	-0.12	-0.03	-0.03
6.(o+Q+Q+o)	5.59	1.47	3.68	-0.91
7.(o+o+Q+Q)	5.71	1.42	3.69	-0.90
Zemin itkisi	0.00	0.00	0.00	0.00
X-Deprem+%5	-74.08	-18.39	-20.35	-20.35
X-Deprem-%5	-78.92	-17.00	-21.11	-21.11
Y-Deprem+%5	18.06	16.07	5.75	5.75
Y-Deprem-%5	15.81	14.42	6.65	6.65
X-Rüzgar+%5	-14.86	-3.74	-4.09	-4.09
X-Rüzgar-%5	-15.81	-3.46	-4.24	-4.24
Y-Rüzgar+%5	2.56	3.91	1.42	1.42
Y-Rüzgar-%5	3.51	3.52	1.63	1.63

MATERIAL:E1 BS30 CS420 Fk: 12.42 12.51 cm²

BETONARME	:	üstMsol	altMsol	Mac.	üstMsağ	altMsağ
Mdur. (tm)	:	-26.12	1.07	(3.75m)	0.00	0.00
max M (tm)	:	119.52	-47.52	20.46	-8.78	30.57
fcd (kg/cm²)	:	200.00	200.00	200.00	200.00	200.00
As' (cm²)	:	0.00	0.00	0.00	0.00	0.00
As (cm²)	:	32.04	16.02	11.82	3.70	9.94

DONATI: 4ø16(mon.)+4ø16(gör.)
4ø20(düz)+ 2xø10/20/13(etriye)

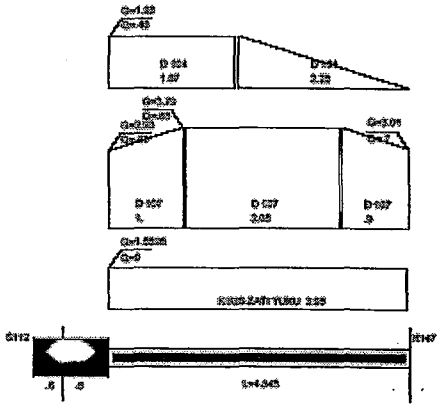

K111
Bw/D= 50/ 90 I= 79 J= 114 Tabla : B2/D2= 39/ 26cm

KOMBİNASYON	SolM (tm)	SağM (tm)	SolVd (t)	SağVd (t)
1.(G+G+G+G)	-11.62	-22.51	-4.87	-14.26
2.(Q+Q+Q+Q)	-1.56	-3.18	-0.74	-1.87
3.(o+Q+o+Q)	-1.69	-3.21	-0.79	-1.93
4.(Q+o+Q+o)	0.13	0.11	0.08	0.08
5.(Q+Q+o+Q)	0.14	0.13	0.08	0.08
6.(o+Q+Q+o)	-1.65	-3.19	-0.77	-1.91
7.(o+o+Q+Q)	-1.61	-3.14	-0.74	-1.88
Zemin itkisi	0.00	0.00	0.00	0.00
X-Deprem+%5	3.35	-62.70	-18.84	-18.84
X-Deprem-%5	-0.94	-74.68	-24.01	-24.01
Y-Deprem+%5	-19.05	-29.40	-15.38	-15.38
Y-Deprem-%5	-12.95	-15.19	-9.25	-9.25
X-Rüzgar+%5	0.76	-12.42	-3.70	-3.70
X-Rüzgar-%5	-0.09	-14.80	-4.73	-4.73
Y-Rüzgar+%5	-4.60	-6.99	-3.68	-3.68
Y-Rüzgar-%5	-3.40	-3.65	-2.24	-2.24

MATERIAL:E1 BS30 CS420 Fk: 12.42 12.51 cm²

BETONARME	:	üstMsol	altMsol	Mac.	üstMsağ	altMsağ
Mdur. (tm)	:	0.00	0.00	(0.00m)	27.54	-10.15
max M (tm)	:	8.58	-22.37	18.98	-100.40	54.42
fcd (kg/cm²)	:	200.00	200.00	200.00	200.00	200.00
As' (cm²)	:	0.00	0.00	0.00	0.00	0.00
As (cm²)	:	3.62	10.59	11.82	25.06	14.56

DONATI: 4ø14(mon.)+4ø16(gör.)+7ø20(sag üst ila.)
4ø20(düz)+1ø16(sağ alt ila.)+ 2xø10/20/11(etriye)

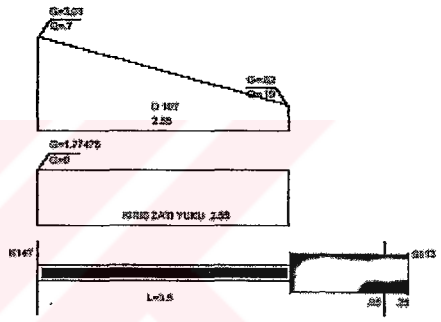

K112
Bw/D= 50/ 90 I= 1721 J= 1722 Tabla : B1/D1= 24/ 26cm

KOMBİNASYON	SolM (tm)	SağM (tm)	SolVd (t)	SağVd (t)
1.(G+G+G+G)	5.92	-5.92	6.10	-6.09
2.(Q+Q+Q+Q)	1.02	-1.02	1.04	-1.04
3.(o+Q+o+Q)	0.98	-0.98	1.04	-1.04
4.(Q+o+Q+o)	0.04	-0.04	0.00	0.00
5.(Q+Q+o+Q)	0.02	-0.03	0.00	0.00
6.(o+Q+Q+o)	0.98	-0.98	1.04	-1.04
7.(o+o+Q+Q)	1.03	-1.03	1.04	-1.04
Zemin itkisi	0.00	0.00	0.00	0.00
X-Deprem+%5	-50.15	-50.15	-20.85	-20.85
X-Deprem-%5	-54.98	-54.88	-22.82	-22.82
Y-Deprem+%5	-2.82	-2.82	-1.17	-1.17
Y-Deprem-%5	2.80	2.80	1.16	1.16
X-Rüzgar+%5	-10.12	-10.12	-4.21	-4.21
X-Rüzgar-%5	-11.07	-11.07	-4.60	-4.60
Y-Rüzgar+%5	-0.67	-0.67	-0.28	-0.28
Y-Rüzgar-%5	0.66	0.66	0.28	0.28

MATERIAL:E1 BS30 CS420 Fk: 5.22 5.23 cm²

BETONARME	:	üstMsol	altMsol	Mac.	üstMsağ	altMsağ
Mdur. (tm)	:	-11.98	6.93	(2.40m)	11.98	-6.93
max M (tm)	:	61.83	-49.55	4.58	-61.83	49.56
fcd (kg/cm²)	:	200.00	200.00	200.00	200.00	200.00
As' (cm²)	:	0.00	0.00	0.00	0.00	0.00
As (cm²)	:	16.77	14.24	11.82	16.77	14.24

DONATI: 4ø14(mon.)+4ø16(gör.)+4ø20(sol üst ila.)+4ø20(sag üst ila.)
4ø20(düz)+1ø16(sol alt ila.)+1ø16(sağ alt ila.)+ 2xø10/11(etriye)

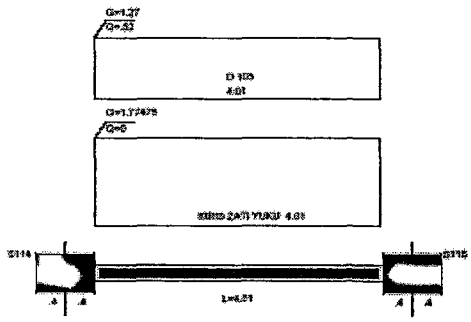

STAAD.Pro V11

FİRMA : | 03-23-2005

PROJE : kolonlukirişlisistem (kolonlukirişlisistem.ST4)

K113
Bw/D= 50/ 90 I= 1724 J= 1728 Tabla : B2/D2= 24/ 26cm

KOMBİNASYON	SolM (tm)	SağM (tm)	SolVd (t)	SağVd (t)
1.(G+G+G+G)	5.59	-5.59	5.86	-5.85
2.(Q+Q+Q+Q)	0.90	-0.90	0.94	-0.94
3.(o+Q+o+Q)	0.86	-0.86	0.94	-0.94
4.(Q+o+Q+o)	0.04	-0.04	0.00	0.00
5.(Q+Q+o+Q)	0.02	-0.03	0.00	0.00
6.(o+Q+Q+o)	0.87	-0.87	0.94	-0.94
7.(o+o+Q+Q)	0.91	-0.91	0.94	-0.94
Zemin itkisi	0.00	0.00	0.00	0.00
X-Deprem+%5	-57.99	-57.99	-24.11	-24.11
X-Deprem-%5	-60.61	-60.61	-25.20	-25.20
Y-Deprem+%5	-1.56	-1.56	-0.65	-0.65
Y-Deprem-%5	1.55	1.55	0.64	0.64
X-Rüzgar+%5	-11.75	-11.75	-4.88	-4.88
X-Rüzgar-%5	-12.28	-12.28	-5.10	-5.10
Y-Rüzgar+%5	-0.37	-0.37	-0.16	-0.16
Y-Rüzgar-%5	0.37	0.37	0.15	0.15

MATERIAL:E1 BS30 CS420 Fk: 5.23 5.23 cm²

BEYONAME	:	üstMsol	altMsol	Mac.	üstMsağ	altMsağ
Mdus.	(tm) :	-12.80	7.97	(2.40m)	12.80	-7.97
max M	(tm) :	67.12	-55.58	4.52	-67.12	55.58
fcd	(kg/cm²) :	200.00	200.00	200.00	200.00	200.00
As'	(cm²) :	0.00	0.00	0.00	0.00	0.00
As	(cm²) :	16.35	15.76	11.82	16.35	15.76

DONATI: 4ø14(mon.)+4ø16(gör.)+4ø20(sol üst ila.)+4ø20(sag üst ila.)
4ø20(düz)+2ø16(sol alt ila.)+2ø16(sağ alt ila.)+ 2xø10/11(etriye)

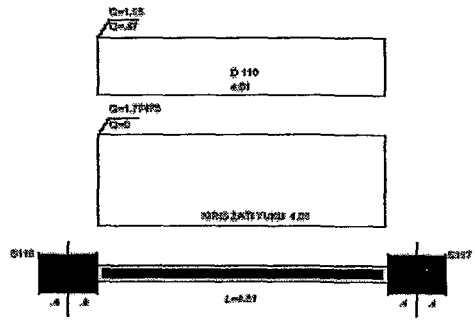

K114
Bw/D= 50/ 90 I= 35 J= 54 Tabla : B1/D1= 43/ 26cm

KOMBİNASYON	SolM (tm)	SağM (tm)	SolVd (t)	SağVd (t)
1.(G+G+G+G)	17.98	7.99	11.63	5.44
2.(Q+Q+Q+Q)	2.07	0.82	1.37	0.43
3.(o+Q+o+Q)	2.01	0.66	1.29	0.35
4.(Q+o+Q+o)	0.09	0.16	0.09	0.09
5.(Q+Q+o+Q)	0.06	0.15	0.08	0.08
6.(o+Q+Q+o)	2.00	0.66	1.29	0.35
7.(o+o+Q+Q)	2.13	0.84	1.40	0.46
Zemin itkisi	0.00	0.00	0.00	0.00
X-Deprem+%5	-64.82	11.44	-19.06	-18.06
X-Deprem-%5	-64.83	11.65	-18.99	-18.99
Y-Deprem+%5	-16.36	-7.43	-8.50	-8.50
Y-Deprem-%5	-16.35	-7.68	-8.58	-8.58
X-Rüzgar+%5	-12.99	2.29	-3.82	-3.82
X-Rüzgar-%5	-12.99	2.32	-3.81	-3.81
Y-Rüzgar+%5	-3.94	-1.79	-2.05	-2.05
Y-Rüzgar-%5	-3.95	-1.85	-2.07	-2.07

MATERIAL:E1 BS30 CS420 Fk: 5.74 13.07 cm²

BEYONAME	:	üstMsol	altMsol	Mac.	üstMsağ	altMsağ
Mdus.	(tm) :	-24.19	10.11	(2.80m)	0.00	0.00
max M	(tm) :	84.94	-48.65	12.25	-4.46	20.48
fcd	(kg/cm²) :	200.00	200.00	200.00	200.00	200.00
As'	(cm²) :	0.00	0.00	0.00	0.00	0.00
As	(cm²) :	20.65	12.62	11.82	1.87	6.66

DONATI: 4ø14(mon.)+4ø16(gör.)+5ø20(sol üst ila.)
4ø20(düz)+1ø14(sol alt ila.)+ 2xø10/20/11(etriye)

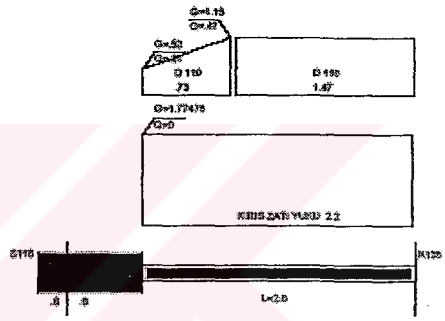

K114
Bw/D= 50/ 90 I= 54 J= 82 Tabla : B1/D1= 43/ 26cm

KOMBİNASYON	SolM (tm)	SağM (tm)	SolVd (t)	SağVd (t)
1.(G+G+G+G)	-4.09	4.08	4.10	-4.10
2.(Q+Q+Q+Q)	-0.35	0.35	0.66	-0.66
3.(o+Q+o+Q)	-0.41	0.41	0.66	-0.66
4.(Q+o+Q+o)	0.05	-0.05	0.00	0.00
5.(Q+Q+o+Q)	0.06	-0.06	0.00	0.00
6.(o+Q+Q+o)	-0.41	0.40	0.66	-0.66
7.(o+o+Q+Q)	-0.38	0.38	0.66	-0.66
Zemin itkisi	0.00	0.00	0.00	0.00
X-Deprem+%5	-15.89	-15.89	-11.31	-11.31
X-Deprem-%5	-16.30	-16.30	-11.60	-11.60
Y-Deprem+%5	8.13	-8.62	-0.17	-0.17
Y-Deprem-%5	8.62	-8.13	0.17	0.17
X-Rüzgar+%5	-3.16	-3.18	-2.26	-2.26
X-Rüzgar-%5	-3.26	-3.26	-2.32	-2.32
Y-Rüzgar+%5	1.96	-2.09	-0.04	-0.04
Y-Rüzgar-%5	2.08	-1.96	0.04	0.04

MATERIAL:E1 BS30 CS420 Fk: 5.74 13.07 cm²

BEYONAME	:	üstMsol	altMsol	Mac.	üstMsağ	altMsağ
Mdus.	(tm) :	0.00	0.00	(1.40m)	0.00	0.00
max M	(tm) :	12.62	-20.61	11.20	-12.62	20.79
fcd	(kg/cm²) :	200.00	200.00	200.00	200.00	200.00
As'	(cm²) :	0.00	0.00	0.00	0.00	0.00
As	(cm²) :	5.34	6.77	11.82	5.34	6.76

DONATI: 4ø14(mon.)+4ø16(gör.)
6ø16(düz)+ 2xø10/20/11(etriye)

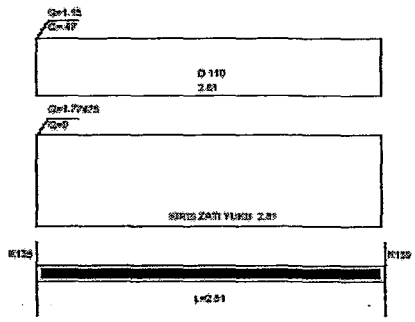

STAAD V11

FİRMA : | 03-23-2005

PROJE : kolonlukirişlisistem (kolonlukirişlisistem.ST4)

K114
Bw/D= 50/ 90 I= 82 J= 81 Tabla : B1/D1= 42/ 26cm

KOMBİNASYON	SolM (tm)	SağM (tm)	SolVd (t)	SağVd (t)
1.(G+G+G+G)	-7.99	-17.97	-5.44	-11.63
2.(Q+Q+Q+Q)	-0.81	-2.07	-0.42	-1.37
3.(o+Q+o+Q)	-0.87	-2.11	-0.46	-1.40
4.(Q+o+Q+o)	0.04	0.01	0.02	0.02
5.(Q+Q+o+Q)	0.05	0.04	0.03	0.03
6.(o+Q+Q+o)	-0.86	-2.10	-0.46	-1.39
7.(o+o+Q+Q)	-0.83	-2.13	-0.46	-1.39
Zemin itkisi	0.00	0.00	0.00	0.00
X-Deprem+%5	11.44	-64.82	-19.07	-19.07
X-Deprem-%5	11.65	-64.83	-18.99	-18.99
Y-Deprem+%5	7.69	16.36	8.59	8.59
Y-Deprem-%5	7.42	16.36	8.50	8.50
X-Rüzgar+%5	2.29	-12.99	-3.82	-3.82
X-Rüzgar-%5	2.22	-12.99	-3.81	-3.81
Y-Rüzgar+%5	1.85	3.95	2.07	2.07
Y-Rüzgar-%5	1.79	3.94	2.05	2.05

MATERIAL:E1 BS20 CS420 Fk: 13.07 5.74 cm²

BETONARME	:	üstMsol	altMsol	Mac.	üstMsağ	altMsağ
Mdur.	(tm) :	0.00	0.00	(0.00m)	24.18	-10.11
max M	(tm) :	4.47	-20.51	12.57	-84.92	48.65
fcd	(kg/cm²) :	200.00	200.00	200.00	200.00	200.00
As'	(cm²) :	0.00	0.00	0.00	0.00	0.00
As	(cm²) :	1.88	6.67	11.82	20.64	12.63

DONATI: 4ø14(mon.)+4ø16(gör.)+5ø20(sag üst ila.)
4ø20(dün)+1ø14(sağ alt ila.)+ 2xø10/20/11(etriye)

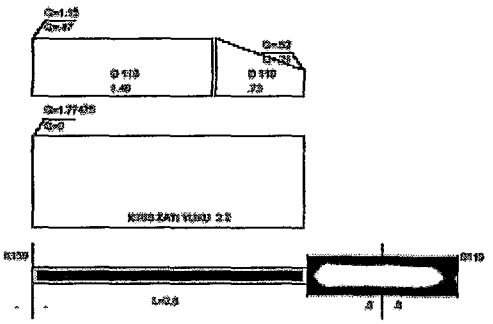

K115
Bw/D= 50/ 90 I= 26 J= 56 Tabla : B1/D1= 39/ 26cm B2/D2= 39/ 26cm

KOMBİNASYON	SolM (tm)	SağM (tm)	SolVd (t)	SağVd (t)
1.(G+G+G+G)	33.44	-27.00	18.75	-21.71
2.(Q+Q+Q+Q)	5.91	-6.51	3.21	-3.84
3.(o+Q+o+Q)	5.76	-6.53	3.19	-3.86
4.(Q+o+Q+o)	0.06	-0.07	0.00	0.00
5.(Q+Q+o+Q)	0.08	-0.02	0.01	0.01
6.(o+Q+Q+o)	5.79	-6.51	3.19	-3.86
7.(o+o+Q+Q)	5.79	-6.67	3.17	-3.88
Zemin itkisi	0.00	0.00	0.00	0.00
X-Deprem+%5	-88.43	-87.36	-22.84	-22.84
X-Deprem-%5	-84.07	-82.99	-21.71	-21.71
Y-Deprem+%5	1.13	0.54	0.22	0.22
Y-Deprem-%5	-4.05	-4.65	-1.12	-1.13
X-Rüzgar+%5	-17.91	-17.70	-4.62	-4.62
X-Rüzgar-%5	-17.02	-16.81	-4.40	-4.40
Y-Rüzgar+%5	0.31	0.17	0.06	0.06
Y-Rüzgar-%5	-0.92	-1.07	-0.26	-0.26

MATERIAL:E1 BS20 CS420 Fk: 10.36 20.02 cm²

BETONARME	:	üstMsol	altMsol	Mac.	üstMsağ	altMsağ
Mdur.	(tm) :	-26.88	3.58	(3.92m)	30.25	-2.06
max M	(tm) :	127.79	-58.83	22.20	-131.04	54.06
fcd	(kg/cm²) :	200.00	200.00	200.00	200.00	200.00
As'	(cm²) :	0.00	0.00	0.00	0.00	0.00
As	(cm²) :	35.73	17.95	11.82	35.68	17.84

DONATI: 5ø16(mon.)+4ø16(gör.)+9ø20(sol üst ila.)+9ø20(sag üst ila.)
4ø20(dün)+2ø20(sol alt ila.)+2ø20(sağ alt ila.)+ 2xø10/20/13(etriye)

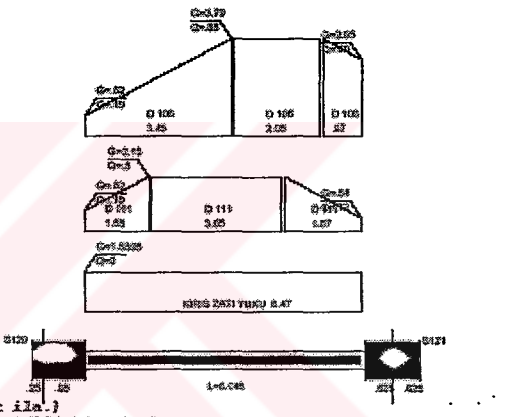

K116
Bw/D= 50/ 90 I= 56 J= 55 Tabla : B1/D1= 35/ 26cm B2/D2= 35/ 26cm

KOMBİNASYON	SolM (tm)	SağM (tm)	SolVd (t)	SağVd (t)
1.(G+G+G+G)	17.68	5.34	11.57	2.93
2.(Q+Q+Q+Q)	2.13	0.61	1.45	0.23
3.(o+Q+o+Q)	0.45	-0.03	0.15	0.15
4.(Q+o+Q+o)	1.67	0.62	1.29	0.07
5.(Q+Q+o+Q)	1.72	0.63	1.31	0.09
6.(o+Q+Q+o)	0.41	-0.02	0.14	0.14
7.(o+o+Q+Q)	2.10	0.58	1.42	0.21
Zemin itkisi	0.00	0.00	0.00	0.00
X-Deprem+%5	-77.81	2.38	-26.94	-26.94
X-Deprem-%5	-76.52	0.00	-27.33	-27.33
Y-Deprem+%5	32.81	20.60	19.08	19.08
Y-Deprem-%5	31.28	23.43	19.54	19.54
X-Rüzgar+%5	-15.56	0.52	-5.38	-5.38
X-Rüzgar-%5	-15.32	0.05	-5.45	-5.45
Y-Rüzgar+%5	7.36	4.96	4.58	4.58
Y-Rüzgar-%5	7.48	5.62	4.68	4.68

MATERIAL:E1 BS20 CS420 Fk: 5.67 17.46 cm²

BETONARME	:	üstMsol	altMsol	Mac.	üstMsağ	altMsağ
Mdur.	(tm) :	-30.74	16.09	(2.80m)	0.00	0.00
max M	(tm) :	97.62	-61.89	8.46	-18.62	29.39
fcd	(kg/cm²) :	200.00	200.00	200.00	200.00	200.00
As'	(cm²) :	0.00	0.00	0.00	0.00	0.00
As	(cm²) :	22.87	14.99	13.55	7.92	9.56

DONATI: 5ø16(mon.)+4ø16(gör.)
5ø20(dün)+ 2xø10/20/11(etriye)

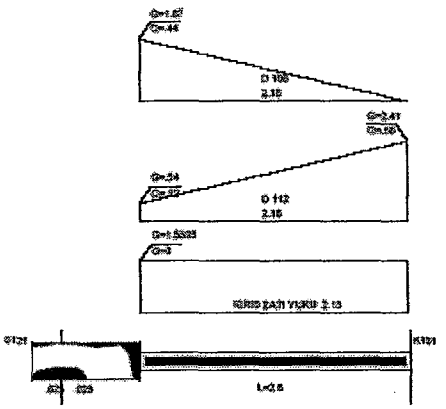

STA-CAD V11

FİRMA : | 03-23-2005

PROJE : kolonlukirişlisistem (kolonlukirişlisistem.ST4)

K116
Bw/D= 50/ 90 I= 55 J= 83 Tabla : B2/D2= 35/ 26cm

KOMBİNASYON	SolM (tm)	SağM (tm)	SolVd (t)	SağVd (t)
1.(G+G+G+G)	-4.27	-8.33	4.39	-6.91
2.(Q+Q+Q+Q)	-0.64	-0.27	0.54	-0.93
3.(o+Q+o+Q)	-0.02	-0.06	-0.03	-0.03
4.(Q+o+Q+o)	-0.50	-0.20	0.57	-0.90
5.(Q+Q+o+Q)	-0.52	-0.22	0.56	-0.91
6.(o+Q+Q+o)	-0.03	-0.07	-0.03	-0.03
7.(o+o+Q+Q)	-0.50	-0.23	0.57	-0.90
Zemin itkisi	0.00	0.00	0.00	0.00
X-Deprem+%5	-25.16	-33.21	-20.85	-20.85
X-Deprem-%5	-22.77	-31.13	-19.25	-19.25
Y-Deprem+%5	-17.51	0.91	-5.93	-5.93
Y-Deprem-%5	-20.35	-1.56	-7.83	-7.83
X-Rüzgar+%5	-5.08	-6.68	-4.20	-4.20
X-Rüzgar-%5	-4.61	-6.27	-3.88	-3.88
Y-Rüzgar+%5	-4.23	0.20	-1.44	-1.44
Y-Rüzgar-%5	-4.90	-0.39	-1.89	-1.89

MATERIAL:S1 BS30 CS420 Fk: 8.19 12.75 cm²

BETONARME	: üstMsol	altMsol	Mac.	üstMsağ	altMsağ
Mdur. (tm)	: 0.00	0.00	(0.97m)	0.00	0.00
max M (tm)	: 21.32	-28.98	10.21	-33.81	32.92
fcd (kg/cm²)	: 200.00	200.00	200.00	200.00	200.00
As' (cm²)	: 0.00	0.00	0.00	0.00	0.00
As (cm²)	: 9.09	9.80	12.64	12.96	10.78

DONATI: 4ø14(mon.)+4ø16(gör.)
7ø16(dün)+ 2xø10/20/11(etriye)

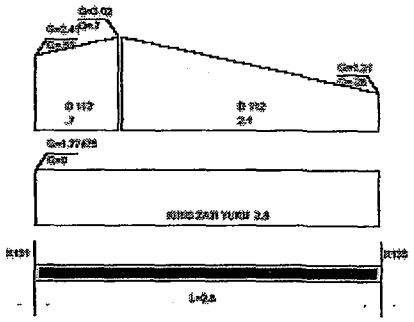

K116
Bw/D= 50/ 90 I= 83 J= 117 Tabla : B2/D2= 35/ 26cm

KOMBİNASYON	SolM (tm)	SağM (tm)	SolVd (t)	SağVd (t)
1.(G+G+G+G)	-3.58	-15.04	-11.74	-13.80
2.(Q+Q+Q+Q)	-0.29	-1.61	-1.16	-1.32
3.(o+Q+o+Q)	-0.19	-0.28	-0.24	-0.34
4.(Q+o+Q+o)	-0.01	-1.29	-0.81	-0.96
5.(Q+Q+o+Q)	0.01	-1.35	-0.83	-0.99
6.(o+Q+Q+o)	-0.18	-0.30	-0.35	-0.35
7.(o+o+Q+Q)	-0.23	-1.49	-1.11	-1.26
Zemin itkisi	0.00	0.00	0.00	0.00
X-Deprem+%5	37.67	-77.86	-28.60	-28.60
X-Deprem-%5	35.78	-73.21	-26.64	-26.64
Y-Deprem+%5	-1.62	-18.41	-14.25	-14.25
Y-Deprem-%5	0.62	-23.93	-16.58	-16.58
X-Rüzgar+%5	7.58	-15.67	-5.76	-5.76
X-Rüzgar-%5	7.20	-14.74	-5.37	-5.37
Y-Rüzgar+%5	-0.38	-4.46	-3.44	-3.44
Y-Rüzgar-%5	0.16	-5.77	-4.00	-4.00

MATERIAL:S1 BS30 CS420 Fk: 8.19 12.75 cm²

BETONARME	: üstMsol	altMsol	Mac.	üstMsağ	altMsağ
Mdur. (tm)	: 0.00	0.00	(0.00m)	60.84	-43.63
max M (tm)	: 34.45	-41.47	5.02	-94.51	64.32
fcd (kg/cm²)	: 200.00	200.00	200.00	200.00	200.00
As' (cm²)	: 0.00	0.00	0.00	0.00	0.00
As (cm²)	: 12.96	13.64	13.64	14.78	7.29

DONATI: 4ø14(mon.)+4ø16(gör.)+2ø20(sag üst ila.)
7ø16(dün)+ 2xø10/20/11(etriye)

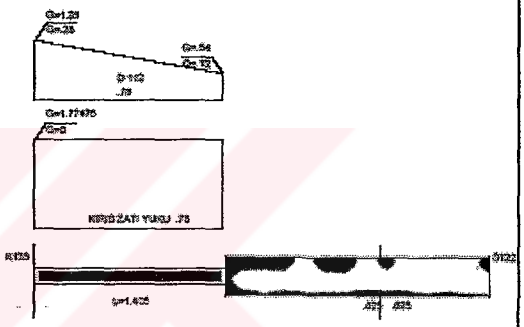

K117
Bw/D= 50/ 90 I= 117 J= 116 Tabla : B2/D2= 35/ 26cm

KOMBİNASYON	SolM (tm)	SağM (tm)	SolVd (t)	SağVd (t)
1.(G+G+G+G)	15.04	3.58	13.80	11.73
2.(Q+Q+Q+Q)	1.60	0.20	1.32	1.16
3.(o+Q+o+Q)	1.46	0.27	1.27	1.11
4.(Q+o+Q+o)	0.11	-0.07	0.03	0.03
5.(Q+Q+o+Q)	0.13	-0.06	0.05	0.05
6.(o+Q+Q+o)	1.49	0.26	1.28	1.12
7.(o+o+Q+Q)	1.52	0.20	1.27	1.11
Zemin itkisi	0.00	0.00	0.00	0.00
X-Deprem+%5	-77.86	37.67	-28.61	-28.61
X-Deprem-%5	-73.20	35.78	-26.64	-26.64
Y-Deprem+%5	23.95	-0.64	16.59	16.59
Y-Deprem-%5	18.42	1.61	14.25	14.25
X-Rüzgar+%5	-15.67	7.58	-5.76	-5.76
X-Rüzgar-%5	-14.74	7.20	-5.37	-5.37
Y-Rüzgar+%5	5.78	-0.16	4.00	4.00
Y-Rüzgar-%5	4.47	0.37	3.44	3.44

MATERIAL:S1 BS30 CS420 Fk: 2.71 18.94 cm²

BETONARME	: üstMsol	altMsol	Mac.	üstMsağ	altMsağ
Mdur. (tm)	: -60.84	43.63	(1.40m)	0.00	0.00
max M (tm)	: 94.51	-64.32	5.42	-24.45	41.51
fcd (kg/cm²)	: 200.00	200.00	200.00	200.00	200.00
As' (cm²)	: 0.00	0.00	0.00	0.00	0.00
As (cm²)	: 14.78	7.29	13.65	13.96	12.65

DONATI: 5ø16(mon.)+4ø16(gör.)
7ø16(dün)+ 2xø10/20/11(etriye)

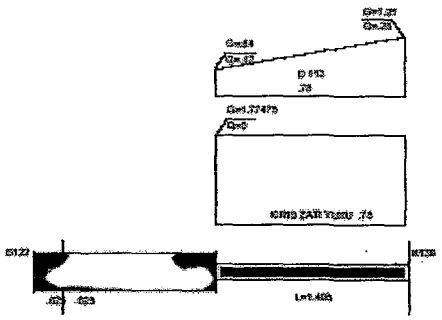

STAA-CAD V11

FİRMA : | 03-23-2005

PROJE : kolonlukirişlisistem (kolonlukirişlisistem.ST4)

K117
Bw/D= 50/ 90 I= 116 J= 115 Tabla : B2/D2= 35/ 26cm

KOMBİNASYON	SolM (tm)	SağM (tm)	SolVd (t)	SağVd (t)
1.(G+G+G+G)	0.22	4.27	6.58	-4.39
2.(Q+Q+Q+Q)	0.27	0.54	0.93	-0.54
3.(o+Q+o+Q)	0.19	0.56	0.91	-0.56
4.(Q+o+Q+o)	0.07	-0.04	0.01	0.01
5.(Q+Q+o+Q)	0.07	-0.01	0.02	0.02
6.(o+Q+Q+o)	0.21	0.56	0.92	-0.55
7.(o+o+Q+Q)	0.25	0.49	0.91	-0.56
Zemin itkisi	0.00	0.00	0.00	0.00
X-Deprem+%5	-33.21	-25.17	-20.85	-20.85
X-Deprem-%5	-31.13	-22.77	-19.25	-19.25
Y-Deprem+%5	1.57	29.36	7.83	7.83
Y-Deprem-%5	-8.91	17.52	5.93	5.93
X-Rüzgar+%5	-6.60	-5.08	-4.20	-4.20
X-Rüzgar-%5	-6.27	-4.61	-3.88	-3.88
Y-Rüzgar+%5	8.29	4.90	1.89	1.89
Y-Rüzgar-%5	-8.20	4.23	1.44	1.44

MATERIAL:E1 BS30 CS420 Fk: 9.14 11.91 cm²

BETONARME :	üstMsol	altMsol	Mac.	üstMsağ	altMsağ
Mdüz. (tm) :	0.00	0.00	(1.85m)	0.00	0.00
max M (tm) :	32.81	-32.92	10.37	-21.32	29.99
fcd (kg/cm²) :	200.00	200.00	200.00	200.00	200.00
As' (cm²) :	0.00	0.00	0.00	0.00	0.00
As (cm²) :	13.96	10.78	13.65	9.09	9.81

DONATI: 4ø14(mon.)+4ø16(gev.)
7ø16(düz)+ 2xø10/20/11(etriye)

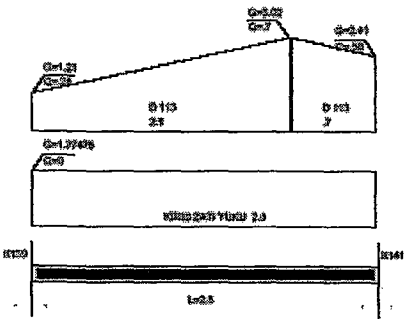

K117
Bw/D= 50/ 90 I= 115 J= 155 Tabla : B1/D1= 35/ 26cm B2/D2= 35/ 26cm

KOMBİNASYON	SolM (tm)	SağM (tm)	SolVd (t)	SağVd (t)
1.(G+G+G+G)	-5.23	-17.68	-2.92	-11.58
2.(Q+Q+Q+Q)	-0.61	-2.12	-0.23	-1.45
3.(o+Q+o+Q)	-0.65	-2.38	-0.24	-1.56
4.(Q+o+Q+o)	0.06	0.26	0.12	0.12
5.(Q+Q+o+Q)	0.04	0.23	0.09	0.09
6.(o+Q+Q+o)	-0.65	-2.35	-0.32	-1.55
7.(o+o+Q+Q)	-0.57	-2.11	-0.21	-1.43
Zemin itkisi	0.00	0.00	0.00	0.00
X-Deprem+%5	2.38	-77.80	-26.94	-26.94
X-Deprem-%5	0.00	-76.52	-27.23	-27.23
Y-Deprem+%5	-23.44	-31.28	-19.54	-19.54
Y-Deprem-%5	-28.61	-32.80	-19.07	-19.07
X-Rüzgar+%5	0.52	-15.58	-5.38	-5.38
X-Rüzgar-%5	0.05	-15.32	-5.45	-5.45
Y-Rüzgar+%5	-5.62	-7.48	-4.68	-4.68
Y-Rüzgar-%5	-4.96	-7.86	-4.58	-4.58

MATERIAL:E1 BS30 CS420 Fk: 9.14 11.91 cm²

BETONARME :	üstMsol	altMsol	Mac.	üstMsağ	altMsağ
Mdüz. (tm) :	0.00	0.00	(0.06m)	30.74	-16.08
max M (tm) :	18.64	-29.42	5.51	-97.86	61.89
fcd (kg/cm²) :	200.00	200.00	200.00	200.00	200.00
As' (cm²) :	0.00	0.00	0.00	0.00	0.00
As (cm²) :	7.92	9.57	13.57	22.95	14.99

DONATI: 4ø14(mon.)+4ø16(gev.)+3ø20(sag üst ila.)
5ø20(düz)+2ø20(sağ alt ila.)+ 2xø10/20/11(etriye)

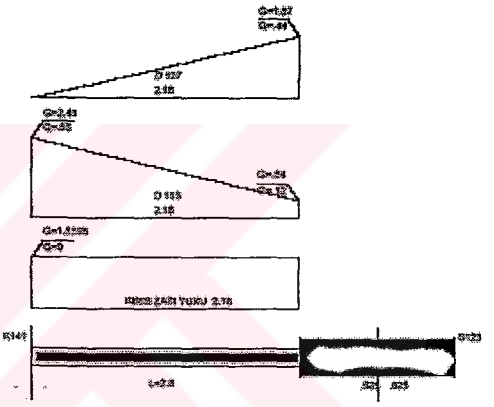

K118
Bw/D= 50/ 90 I= 155 J= 154 Tabla : B1/D1= 35/ 26cm B2/D2= 35/ 26cm

KOMBİNASYON	SolM (tm)	SağM (tm)	SolVd (t)	SağVd (t)
1.(G+G+G+G)	36.96	-32.46	21.69	-18.77
2.(Q+Q+Q+Q)	6.51	-5.82	3.84	-3.21
3.(o+Q+o+Q)	6.66	-5.70	3.89	-3.16
4.(Q+o+Q+o)	-0.06	-0.13	-0.03	-0.03
5.(Q+Q+o+Q)	-0.08	-0.13	-0.03	-0.03
6.(o+Q+Q+o)	6.64	-5.72	3.88	-3.17
7.(o+o+Q+Q)	6.63	-5.81	3.87	-3.18
Zemin itkisi	0.00	0.00	0.00	0.00
X-Deprem+%5	-87.26	-88.43	-22.84	-22.84
X-Deprem-%5	-82.59	-84.07	-21.71	-21.71
Y-Deprem+%5	4.67	4.06	1.13	1.13
Y-Deprem-%5	-0.52	-1.11	-0.21	-0.21
X-Rüzgar+%5	-17.70	-17.91	-4.63	-4.63
X-Rüzgar-%5	-16.52	-17.03	-4.40	-4.40
Y-Rüzgar+%5	1.08	0.93	0.26	0.26
Y-Rüzgar-%5	-0.16	-0.30	-0.06	-0.06

MATERIAL:E1 BS30 CS420 Fk: 13.55 17.18 cm²

BETONARME :	üstMsol	altMsol	Mac.	üstMsağ	altMsağ
Mdüz. (tm) :	-30.23	2.08	(3.81m)	26.89	-3.57
max M (tm) :	131.80	-54.08	28.17	-127.80	58.22
fcd (kg/cm²) :	200.00	200.00	200.00	200.00	200.00
As' (cm²) :	0.00	0.00	0.00	0.00	0.00
As (cm²) :	35.68	17.84	11.82	35.73	17.95

DONATI: 5ø16(mon.)+4ø16(gev.)+3ø20(sag üst ila.)
4ø20(düz)+2ø20(sağ alt ila.)+ 2xø10/20/13(etriye)

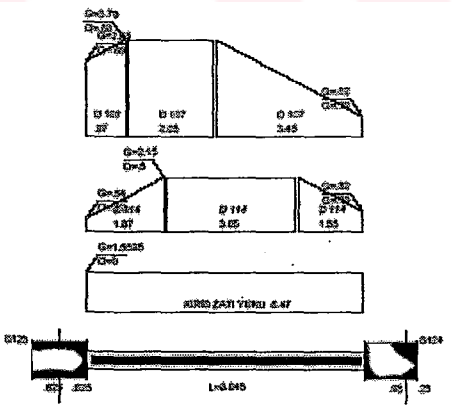

STA-CAD V11

FİRMA : | 03-23-2005

PROJE : kolonlukirişlisistem (kolonlukirişlisistem.ST4)

K119
Bw/D= 50/ 90 I= 57 J= 85 Tabla : B1/D1= 39/ 26cm

KOMBİNASYON	SolM (tm)	SağM (tm)	SolVd (t)	SağVd (t)
1.(G+G+G+G)	20.42	9.71	12.95	2.86
2.(Q+Q+Q+Q)	2.58	1.13	1.52	0.49
3.(o+Q+o+Q)	2.17	0.95	1.35	0.31
4.(Q+o+Q+o)	0.35	0.19	0.17	0.17
5.(Q+Q+o+Q)	0.36	0.18	0.17	0.17
6.(o+Q+Q+o)	2.48	1.20	1.53	0.48
7.(o+o+Q+Q)	2.21	0.91	1.35	0.31
Zemin itkisi	0.00	0.00	0.00	0.00
X-Deprem+%5	-86.25	-5.94	-29.04	-29.04
X-Deprem-%5	-70.52	-1.20	-22.62	-22.62
Y-Deprem+%5	-14.49	-14.71	-9.20	-9.20
Y-Deprem-%5	-33.05	-29.34	-16.81	-16.81
X-Rüzgar+%5	-17.66	-1.27	-5.96	-5.96
X-Rüzgar-%5	-14.55	-0.33	-4.69	-4.69
Y-Rüzgar+%5	-3.54	-3.60	-2.25	-2.25
Y-Rüzgar-%5	-7.93	-4.93	-4.05	-4.05

MATERİAL:El B30 CS420 Fk: 9.00 12.70 cm²

BETONARME	:	üstMsol	altMsol	Mac.	üstMsağ	altMsağ
Mdüz.	(tm) :	-27.63	12.60	(3.17m)	0.00	0.00
max M	(tm) :	109.25	-67.87	15.12	-11.60	31.25
fcd	(kg/cm²) :	200.00	200.00	200.00	200.00	200.00
As'	(cm²) :	0.00	0.00	0.00	0.00	0.00
As	(cm²) :	28.32	18.28	11.82	4.90	10.22

DONATI: 5ø14(mon.)+4ø16(gör.)+7ø20(sol üst ila.)
4ø20(düz)+2ø20(sol alt ila.)+ 2xø10/20/11(etriye)

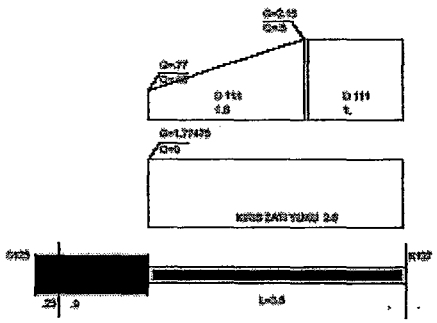

K119
Bw/D= 50/ 90 I= 85 J= 84 Tabla : B1/D1= 39/ 26cm B2/D2= 39/ 26cm

KOMBİNASYON	SolM (tm)	SağM (tm)	SolVd (t)	SağVd (t)
1.(G+G+G+G)	-8.70	-23.53	2.99	-14.40
2.(Q+Q+Q+Q)	-0.95	-3.10	0.64	-1.96
3.(o+Q+o+Q)	-0.83	-3.08	0.67	-1.93
4.(Q+o+Q+o)	-0.15	-0.12	-0.06	-0.06
5.(Q+Q+o+Q)	-0.14	-0.06	-0.04	-0.04
6.(o+Q+Q+o)	-1.06	-2.28	0.57	-2.03
7.(o+o+Q+Q)	-0.77	-3.05	0.69	-1.91
Zemin itkisi	0.00	0.00	0.00	0.00
X-Deprem+%5	-15.17	-85.48	-22.14	-22.14
X-Deprem-%5	-16.10	-77.05	-20.50	-20.50
Y-Deprem+%5	15.51	17.99	7.27	7.27
Y-Deprem-%5	16.62	7.98	5.41	5.41
X-Rüzgar+%5	-3.06	-17.41	-4.50	-4.50
X-Rüzgar-%5	-3.24	-15.73	-4.17	-4.17
Y-Rüzgar+%5	3.79	4.40	1.80	1.80
Y-Rüzgar-%5	4.05	2.03	1.34	1.34

MATERİAL:El B30 CS420 Fk: 12.96 9.02 cm²

BETONARME	:	üstMsol	altMsol	Mac.	üstMsağ	altMsağ
Mdüz.	(tm) :	0.00	0.00	(0.82m)	22.30	-5.70
max M	(tm) :	8.79	-26.37	15.76	-112.29	64.20
fcd	(kg/cm²) :	200.00	200.00	200.00	200.00	200.00
As'	(cm²) :	0.00	0.00	0.00	0.00	0.00
As	(cm²) :	3.71	8.57	11.82	31.11	19.24

DONATI: 5ø14(mon.)+4ø16(gör.)+8ø20(sag üst ila.)
4ø20(düz)+3ø20(sağ alt ila.)+ 2xø10/20/11(etriye)

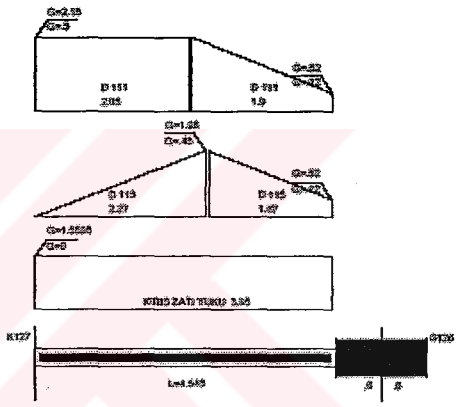

K120
Bw/D= 50/ 90 I= 197 J= 240 Tabla : B1/D1= 39/ 26cm B2/D2= 39/ 26cm

KOMBİNASYON	SolM (tm)	SağM (tm)	SolVd (t)	SağVd (t)
1.(G+G+G+G)	23.53	8.71	14.40	-2.99
2.(Q+Q+Q+Q)	3.10	0.95	1.96	-0.64
3.(o+Q+o+Q)	3.09	0.83	1.93	-0.67
4.(Q+o+Q+o)	0.11	0.16	0.06	0.06
5.(Q+Q+o+Q)	0.05	0.13	0.04	0.04
6.(o+Q+Q+o)	3.30	1.06	2.03	-0.57
7.(o+o+Q+Q)	2.96	0.78	1.92	-0.69
Zemin itkisi	0.00	0.00	0.00	0.00
X-Deprem+%5	-85.48	-15.17	-22.14	-22.14
X-Deprem-%5	-77.05	-16.11	-20.50	-20.50
Y-Deprem+%5	-7.95	-16.62	-5.41	-5.41
Y-Deprem-%5	-17.95	-15.51	-7.26	-7.26
X-Rüzgar+%5	-17.41	-3.06	-4.50	-4.50
X-Rüzgar-%5	-15.73	-3.24	-4.17	-4.17
Y-Rüzgar+%5	-2.02	-4.05	-1.34	-1.34
Y-Rüzgar-%5	-4.39	-3.79	-1.80	-1.80

MATERİAL:El B30 CS420 Fk: 8.22 16.34 cm²

BETONARME	:	üstMsol	altMsol	Mac.	üstMsağ	altMsağ
Mdüz.	(tm) :	-22.30	5.70	(3.75m)	0.00	0.00
max M	(tm) :	112.31	-64.29	15.75	-8.78	26.39
fcd	(kg/cm²) :	200.00	200.00	200.00	200.00	200.00
As'	(cm²) :	0.00	0.00	0.00	0.00	0.00
As	(cm²) :	31.12	19.24	11.82	3.70	8.57

DONATI: 5ø14(mon.)+4ø16(gör.)+8ø20(sol üst ila.)
4ø20(düz)+3ø20(sol alt ila.)+ 2xø10/20/11(etriye)

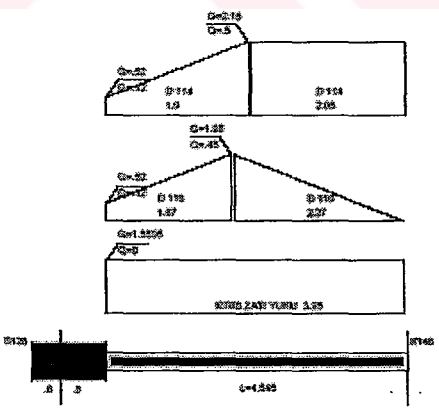

STAA-CAD V11

FİRMA : | 03-23-2005

PROJE : kolonlukirişlisistem (kolonlukirişlisistem.ST4)

K120
Bw/D= 50/ 90 I= 240 J= 196 Tabla : B1/D1= 39/ 26cm

KOMBİNASYON	SolM (tm)	SağM (tm)	SolVd (t)	SağVd (t)
1.(G+G+G+G)	-9.72	-20.41	-3.86	-12.95
2.(Q+Q+Q+Q)	-1.12	-2.58	-0.49	-1.53
3.(o+Q+o+Q)	-0.96	-2.17	-0.31	-1.35
4.(Q+o+Q+o)	-0.18	-0.36	-0.17	-0.17
5.(Q+Q+o+Q)	-0.18	-0.37	-0.17	-0.17
6.(o+Q+Q+o)	-1.20	-2.46	-0.48	-1.52
7.(o+o+Q+Q)	-0.91	-2.21	-0.30	-1.35
Zemin itkisi	0.00	0.00	0.00	0.00
X-Deprem+%5	-5.95	-66.25	-29.04	-29.04
X-Deprem-%5	-1.20	-70.62	-22.62	-22.62
Y-Deprem+%5	20.36	33.10	16.84	16.84
Y-Deprem-%5	14.72	14.54	9.21	9.21
X-Rüzgar+%5	-1.27	-17.67	-5.96	-5.96
X-Rüzgar-%5	-8.32	-14.55	-4.69	-4.69
Y-Rüzgar+%5	4.92	7.94	4.06	4.06
Y-Rüzgar-%5	3.60	3.56	2.25	2.25

MATERIAL:E1 BS30 CS420 Fk: 8.22 16.34 cm²

BETONARME :	üstMsol	altMsol	Mac.	üstMsağ	altMsağ
Mdus. (tm) :	0.00	0.00	(0.00m)	27.63	-12.61
max M (tm) :	11.61	-21.28	15.15	-109.25	67.88
fcd (kg/cm²) :	200.00	200.00	200.00	200.00	200.00
As' (cm²) :	0.00	0.00	0.00	0.00	0.00
As (cm²) :	4.91	10.22	11.82	28.32	18.28

DONATI: 5ø14(mon.)+4ø16(gör.)+7ø20(sag üst ila.)
4ø20(düz)+2ø20(sağ alt ila.)+ 2xø10/20/11(etriye)

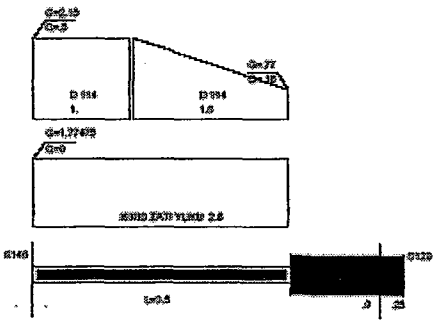

K121
Bw/D= 50/ 80 I= 119 J= 118 Tabla : B1/D1= 18/ 26cm

KOMBİNASYON	SolM (tm)	SağM (tm)	SolVd (t)	SağVd (t)
1.(G+G+G+G)	4.78	-5.43	4.49	-4.52
2.(Q+Q+Q+Q)	0.58	-0.48	0.50	-0.41
3.(o+Q+o+Q)	0.52	-0.47	0.49	-0.42
4.(Q+o+Q+o)	0.03	-0.03	0.00	0.00
5.(Q+Q+o+Q)	0.05	0.01	0.02	0.02
6.(o+Q+Q+o)	0.55	-0.47	0.50	-0.41
7.(o+o+Q+Q)	0.52	-0.56	0.47	-0.44
Zemin itkisi	0.00	0.00	0.00	0.00
X-Deprem+%5	-86.85	-89.33	-41.50	-41.50
X-Deprem-%5	-70.30	-71.97	-33.52	-33.52
Y-Deprem+%5	10.43	10.86	5.02	5.02
Y-Deprem-%5	-8.22	-9.75	-4.47	-4.47
X-Rüzgar+%5	-17.85	-18.37	-8.53	-8.53
X-Rüzgar-%5	-14.55	-14.90	-6.94	-6.94
Y-Rüzgar+%5	2.46	2.57	1.18	1.18
Y-Rüzgar-%5	-2.20	-2.33	-1.07	-1.07

MATERIAL:E1 BS30 CS420 Fk: 10.22 12.00 cm²

BETONARME :	üstMsol	altMsol	Mac.	üstMsağ	altMsağ
Mdus. (tm) :	-25.57	20.61	(2.06m)	29.02	-23.40
max M (tm) :	92.22	-82.54	2.13	-95.82	84.45
fcd (kg/cm²) :	200.00	200.00	200.00	200.00	200.00
As' (cm²) :	0.00	0.00	0.00	0.00	0.00
As (cm²) :	25.91	23.46	10.57	25.76	23.11

DONATI: 5ø14(mon.)+8ø16(gör.)+6ø20(sol üst ila.)+6ø20(sag üst ila.)
4ø20(düz)+4ø20(sol alt ila.)+4ø20(sağ alt ila.)+ 2xø10/11(etriye)

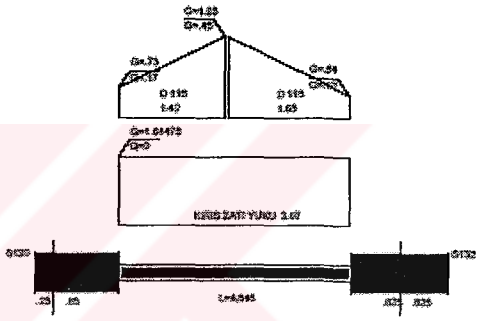

K122
Bw/D= 50/ 80 I= 198 J= 241 Tabla : B1/D1= 18/ 26cm

KOMBİNASYON	SolM (tm)	SağM (tm)	SolVd (t)	SağVd (t)
1.(G+G+G+G)	5.44	-4.78	4.53	-4.48
2.(Q+Q+Q+Q)	0.48	-0.58	0.41	-0.50
3.(o+Q+o+Q)	0.05	0.01	0.01	0.01
4.(Q+o+Q+o)	0.46	-0.57	0.41	-0.50
5.(Q+Q+o+Q)	0.00	-0.06	-0.01	-0.01
6.(o+Q+Q+o)	0.55	-0.51	0.44	-0.47
7.(o+o+Q+Q)	0.47	-0.56	0.41	-0.50
Zemin itkisi	0.00	0.00	0.00	0.00
X-Deprem+%5	-89.23	-86.85	-41.50	-41.50
X-Deprem-%5	-71.97	-70.20	-33.52	-33.52
Y-Deprem+%5	9.82	9.28	4.50	4.50
Y-Deprem-%5	-10.80	-10.36	-4.98	-4.98
X-Rüzgar+%5	-18.37	-17.85	-8.53	-8.53
X-Rüzgar-%5	-14.90	-14.55	-6.94	-6.94
Y-Rüzgar+%5	2.35	2.22	1.08	1.08
Y-Rüzgar-%5	-2.54	-2.44	-1.17	-1.17

MATERIAL:E1 BS30 CS420 Fk: 10.69 11.46 cm²

BETONARME :	üstMsol	altMsol	Mac.	üstMsağ	altMsağ
Mdus. (tm) :	-29.03	23.39	(2.21m)	25.57	-20.61
max M (tm) :	95.32	-84.44	2.11	-92.21	82.55
fcd (kg/cm²) :	200.00	200.00	200.00	200.00	200.00
As' (cm²) :	0.00	0.00	0.00	0.00	0.00
As (cm²) :	25.76	23.11	10.57	25.91	23.46

DONATI: 5ø14(mon.)+8ø16(gör.)+6ø20(sol üst ila.)+6ø20(sag üst ila.)
4ø20(düz)+4ø20(sol alt ila.)+4ø20(sağ alt ila.)+ 2xø10/11(etriye)

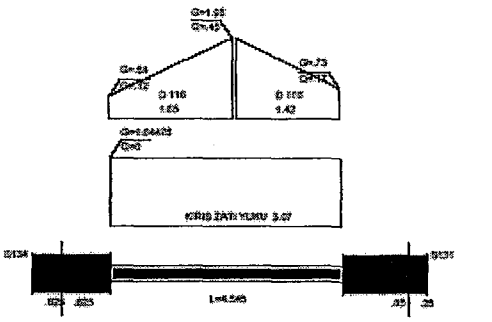

STAA-CAD V11

FİRMA : | 03-23-2005

PROJE : kolonlukirişlisistem (kolonlukirişlisistem.ST4)

K123
By/D= 50/ 90 I= 118 J= 157 Tabla : B1/D1= 35/ 26cm

KOMBİNASYON	SolM (tm)	SağM (tm)	SolVd (t)	SağVd (t)
1.(G+G+G+G)	18.71	-15.19	10.73	-9.76
2.(Q+Q+Q+Q)	2.34	-1.78	1.26	-1.11
3.(o+Q+o+Q)	0.09	0.00	0.01	0.01
4.(Q+o+Q+o)	2.21	-1.83	1.24	-1.12
5.(Q+Q+o+Q)	2.18	-1.95	1.21	-1.15
6.(o+Q+Q+o)	0.15	0.09	0.03	0.03
7.(o+o+Q+Q)	2.27	-1.78	1.25	-1.12
Zemin itkisi	0.00	0.00	0.00	0.00
X-Deprem+%5	-104.18	-102.41	-29.49	-29.49
X-Deprem-%5	-83.84	-82.31	-23.72	-23.72
Y-Deprem+%5	14.08	13.96	4.00	4.00
Y-Deprem-%5	-10.08	-9.90	-2.85	-2.85
X-Rüzgar+%5	-21.16	-20.81	-5.99	-5.99
X-Rüzgar-%5	-17.13	-16.82	-4.85	-4.85
Y-Rüzgar+%5	2.29	2.26	0.93	0.93
Y-Rüzgar-%5	-2.39	-2.35	-0.68	-0.68

MATERIAL:E1 BS20 CS420 Fk: 9.04 10.65 cm²

BETONARME	:	üstMsol	altMsol	Mac.	üstMsağ	altMsağ
Mdüz.	(tm) :	-25.92	12.40	(3.61m)	24.22	-12.42
max M	(tm) :	125.23	-87.34	9.86	-119.55	88.73
fcd	(kg/cm²) :	200.00	200.00	200.00	200.00	200.00
As'	(cm²) :	0.00	0.00	0.00	0.00	0.00
As	(cm²) :	35.10	25.08	11.82	32.55	25.56

DONATI: 5ø16(mon.)+4ø16(göv.)+8ø20(sol üst ila.)+8ø20(sağ üst ila.)
4ø20(düz)+4ø20(sol alt ila.)+5ø20(sağ alt ila.)+ 2xø10/20/13(etriye)

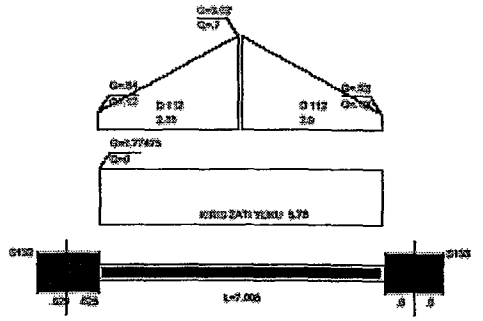

K124
By/D= 50/ 90 I= 157 J= 198 Tabla : B1/D1= 35/ 26cm

KOMBİNASYON	SolM (tm)	SağM (tm)	SolVd (t)	SağVd (t)
1.(G+G+G+G)	15.19	-18.78	9.77	-10.72
2.(Q+Q+Q+Q)	1.78	-2.34	1.11	-1.26
3.(o+Q+o+Q)	1.82	-2.21	1.13	-1.24
4.(Q+o+Q+o)	-0.01	-0.09	-0.01	-0.01
5.(Q+Q+o+Q)	1.86	-2.21	1.14	-1.23
6.(o+Q+Q+o)	1.81	-2.27	1.12	-1.25
7.(o+o+Q+Q)	-0.04	-0.12	-0.02	-0.02
Zemin itkisi	0.00	0.00	0.00	0.00
X-Deprem+%5	-102.40	-104.18	-29.49	-29.49
X-Deprem-%5	-82.31	-83.84	-23.72	-23.72
Y-Deprem+%5	9.97	10.14	2.87	2.87
Y-Deprem-%5	-13.89	-14.02	-3.98	-3.98
X-Rüzgar+%5	-20.81	-21.16	-5.99	-5.99
X-Rüzgar-%5	-16.82	-17.13	-4.85	-4.85
Y-Rüzgar+%5	2.38	2.42	0.68	0.68
Y-Rüzgar-%5	-3.24	-3.26	-0.93	-0.93

MATERIAL:E1 BS30 CS420 Fk: 7.58 12.27 cm²

BETONARME	:	üstMsol	altMsol	Mac.	üstMsağ	altMsağ
Mdüz.	(tm) :	-24.22	12.42	(3.42m)	25.92	-12.40
max M	(tm) :	119.48	-88.73	9.88	-125.22	87.35
fcd	(kg/cm²) :	200.00	200.00	200.00	200.00	200.00
As'	(cm²) :	0.00	0.00	0.00	0.00	0.00
As	(cm²) :	32.52	25.56	11.82	35.10	25.08

DONATI: 5ø16(mon.)+4ø16(göv.)+8ø20(sağ üst ila.)
4ø20(düz)+4ø20(sağ alt ila.)+ 2xø10/20/13(etriye)

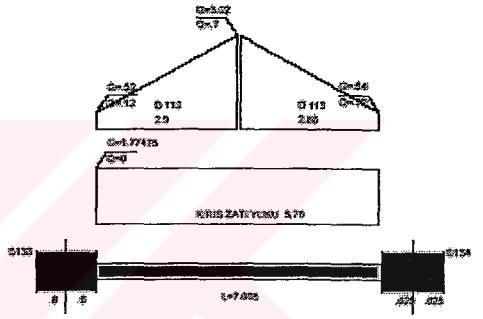

K126
By/D= 50/ 90 I= 20 J= 36 Tabla : B2/D2= 44/ 26cm

KOMBİNASYON	SolM (tm)	SağM (tm)	SolVd (t)	SağVd (t)
1.(G+G+G+G)	27.25	-27.95	14.85	-14.49
2.(Q+Q+Q+Q)	3.75	-3.71	1.94	-1.83
3.(o+Q+o+Q)	3.67	-3.73	1.93	-1.85
4.(Q+o+Q+o)	0.09	0.03	0.01	0.01
5.(Q+Q+o+Q)	0.10	0.06	0.02	0.02
6.(o+Q+Q+o)	3.69	-3.71	1.93	-1.84
7.(o+o+Q+Q)	3.72	-3.76	1.92	-1.84
Zemin itkisi	0.00	0.00	0.00	0.00
X-Deprem+%5	-15.21	-15.29	-3.59	-3.59
X-Deprem-%5	2.65	2.72	0.63	0.63
Y-Deprem+%5	-54.96	-55.15	-12.92	-12.92
Y-Deprem-%5	-76.29	-76.53	-17.94	-17.94
X-Rüzgar+%5	-3.40	-3.40	-0.80	-0.80
X-Rüzgar-%5	0.15	0.16	0.04	0.04
Y-Rüzgar+%5	-13.22	-13.26	-3.11	-3.11
Y-Rüzgar-%5	-18.23	-18.28	-4.29	-4.29

MATERIAL:E1 BS20 CS420 Fk: 9.63 9.66 cm²

BETONARME	:	üstMsol	altMsol	Mac.	üstMsağ	altMsağ
Mdüz.	(tm) :	-18.23	2.40	(4.22m)	20.56	-2.94
max M	(tm) :	107.29	-51.77	19.14	-108.25	51.27
fcd	(kg/cm²) :	200.00	200.00	200.00	200.00	200.00
As'	(cm²) :	0.00	0.00	0.00	0.00	0.00
As	(cm²) :	31.14	16.26	11.82	30.62	15.95

DONATI: 5ø14(mon.)+4ø16(göv.)+8ø20(sol üst ila.)
4ø20(düz)+2ø16(sol alt ila.)+ 2xø10/20/11(etriye)

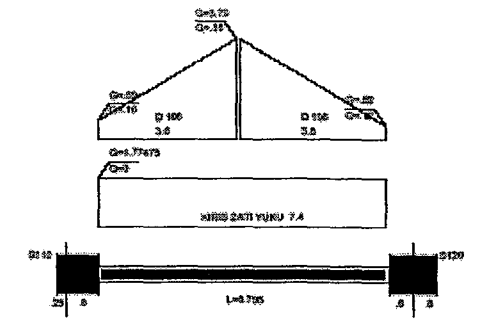

STAA-CAD V11

FİRMA : | 03-23-2005

PROJE : kolonlukirişlisistem (kolonlukirişlisistem.ST4)

K125
Bw/D= 50/ 90 I= 36 J= 57 Tabla : B2/D2= 21/ 26cm

KOMBİNASYON	SolM (tm)	SağM (tm)	SolVd (t)	SağVd (t)
1.(G+G+G+G)	4.71	-9.01	4.50	-6.57
2.(Q+Q+Q+Q)	0.31	-1.17	0.26	-0.77
3.(o+Q+o+Q)	0.00	-0.16	-0.02	-0.03
4.(Q+o+Q+o)	0.34	-0.97	0.41	-0.72
5.(Q+Q+o+Q)	0.29	-1.05	0.28	-0.75
6.(o+Q+Q+o)	-0.07	-0.22	-0.06	-0.06
7.(o+o+Q+Q)	0.46	-0.99	0.42	-0.70
Zemin itkisi	0.00	0.00	0.00	0.00
X-Deprem+%5	-21.86	-21.85	-9.35	-9.35
X-Deprem-%5	2.09	2.20	0.92	0.92
Y-Deprem+%5	-71.12	-71.36	-30.48	-30.48
Y-Deprem-%5	-99.56	-99.91	-42.67	-42.67
X-Rüzgar+%5	-4.84	-4.84	-2.07	-2.07
X-Rüzgar-%5	-0.05	-0.03	-0.02	-0.02
Y-Rüzgar+%5	-17.39	-17.44	-7.45	-7.45
Y-Rüzgar-%5	-24.14	-24.22	-10.34	-10.34

MATERIAL:El BS30 CS420 Fk: 7.89 13.41 cm²

BETONARME	: üstMsol	altMsol	Mac.	üstMsağ	altMsağ
Mdus. (tm)	: -28.52	23.17	(2.15m)	28.75	-21.14
max M (tm)	: 104.73	-95.32	2.91	-110.09	91.80
fcd (kg/cm²)	: 200.00	200.00	200.00	200.00	200.00
As' (cm²)	: 0.00	0.00	0.00	0.00	0.00
As (cm²)	: 26.30	24.20	11.82	28.21	22.77

DONATI: 5ø14(mon.)+6ø20(gör.)+6ø20(sol üst ila.)+7ø20(sag üst ila.)
4ø20(düz)+4ø20(sol alt ila.)+4ø20(sağ alt ila.)+ 2xø10/11(etriye)

K127
Bw/D= 50/ 90 I= 85 J= 119 Tabla : B2/D2= 22/ 26cm

KOMBİNASYON	SolM (tm)	SağM (tm)	SolVd (t)	SağVd (t)
1.(G+G+G+G)	-2.18	-17.58	0.87	-9.83
2.(Q+Q+Q+Q)	-0.49	-2.14	-0.15	-1.10
3.(o+Q+o+Q)	-0.46	-1.08	-0.36	-0.36
4.(Q+o+Q+o)	-0.01	-1.01	0.22	-0.72
5.(Q+Q+o+Q)	-0.04	-1.07	0.21	-0.74
6.(o+Q+Q+o)	-0.42	-1.93	-0.09	-1.05
7.(o+o+Q+Q)	-0.49	-1.13	-0.36	-0.38
Zemin itkisi	0.00	0.00	0.00	0.00
X-Deprem+%5	-5.86	-20.43	-6.89	-6.89
X-Deprem-%5	-2.81	-6.22	-2.12	-2.12
Y-Deprem+%5	-20.44	-49.96	-16.56	-16.56
Y-Deprem-%5	-27.62	-66.84	-22.22	-22.22
X-Rüzgar+%5	-1.87	-4.32	-1.46	-1.46
X-Rüzgar-%5	-0.67	-1.51	-0.51	-0.51
Y-Rüzgar+%5	-5.00	-12.22	-4.05	-4.05
Y-Rüzgar-%5	-6.69	-16.20	-5.39	-5.39

MATERIAL:El BS30 CS420 Fk: 8.84 8.15 cm²

BETONARME	: üstMsol	altMsol	Mac.	üstMsağ	altMsağ
Mdus. (tm)	: 0.00	0.00	(0.57m)	18.24	-7.26
max M (tm)	: 24.76	-81.29	4.90	-86.56	51.01
fcd (kg/cm²)	: 200.00	200.00	200.00	200.00	200.00
As' (cm²)	: 0.00	0.00	0.00	0.00	0.00
As (cm²)	: 10.59	10.26	11.82	23.39	14.43

DONATI: 4ø14(mon.)+4ø16(gör.)+2ø20(sol üst ila.)+6ø20(sag üst ila.)
4ø20(düz)+1ø16(sağ alt ila.)+ 2xø10/11(etriye)

K128
Bw/D= 50/ 90 I= 4 J= 10 Tabla : B2/D2= 22/ 26cm

KOMBİNASYON	SolM (tm)	SağM (tm)	SolVd (t)	SağVd (t)
1.(G+G+G+G)	18.45	3.49	10.25	-0.82
2.(Q+Q+Q+Q)	2.42	0.61	1.20	0.21
3.(o+Q+o+Q)	2.16	0.49	1.12	0.12
4.(Q+o+Q+o)	0.25	0.11	0.08	0.08
5.(Q+Q+o+Q)	0.32	0.14	0.11	0.11
6.(o+Q+Q+o)	2.24	0.53	1.14	0.14
7.(o+o+Q+Q)	2.26	0.52	1.15	0.15
Zemin itkisi	0.00	0.00	0.00	0.00
X-Deprem+%5	-4.49	-2.01	-1.50	-1.50
X-Deprem-%5	8.59	3.93	2.90	2.90
Y-Deprem+%5	-47.55	-21.13	-15.89	-15.89
Y-Deprem-%5	-63.08	-28.25	-21.12	-21.12
X-Rüzgar+%5	-1.15	-0.52	-0.39	-0.39
X-Rüzgar-%5	1.44	0.66	0.49	0.49
Y-Rüzgar+%5	-11.58	-5.16	-3.87	-3.87
Y-Rüzgar-%5	-15.23	-6.82	-5.10	-5.10

MATERIAL:El BS30 CS420 Fk: 9.14 0.25 cm²

BETONARME	: üstMsol	altMsol	Mac.	üstMsağ	altMsağ
Mdus. (tm)	: -15.47	5.65	(3.95m)	0.00	0.00
max M (tm)	: 83.56	-46.48	5.79	-25.11	32.34
fcd (kg/cm²)	: 200.00	200.00	200.00	200.00	200.00
As' (cm²)	: 0.00	0.00	0.00	0.00	0.00
As (cm²)	: 23.45	13.47	11.82	10.74	10.61

DONATI: 4ø14(mon.)+4ø16(gör.)+6ø20(sol üst ila.)+2ø20(sag üst ila.)
4ø20(düz)+1ø14(sol alt ila.)+ 2xø10/11(etriye)

STAA-CAD V11

FİRMA : | 03-23-2005

PROJE : kolonlukirişlisistem (kolonlukirişlisistem.ST4)

K130
Bw/D= 50/ 90 I= 56 J= 84 Tabla : B1/D1= 22/ 26cm B2/D2= 22/ 26cm

KOMBİNASYON	SolM (tm)	SağM (tm)	SolVd (t)	SağVd (t)
1.(G+G+G+G)	8.20	-15.10	7.27	-11.44
2.(Q+Q+Q+Q)	1.24	-2.51	1.07	-1.90
3.(o+Q+o+Q)	1.52	-2.13	1.20	-1.77
4.(Q+o+Q+o)	-0.24	-0.34	-0.12	-0.12
5.(Q+Q+o+Q)	-0.26	-0.32	-0.12	-0.12
6.(o+Q+Q+o)	1.48	-2.18	1.18	-1.79
7.(o+o+Q+Q)	1.24	-2.44	1.10	-1.87
Zemin itkisi	0.00	0.00	0.00	0.00
X-Deprem+%5	-5.64	-5.04	-2.14	-2.14
X-Deprem-%5	7.18	7.23	2.88	2.88
Y-Deprem+%5	-97.01	-93.34	-38.11	-38.11
Y-Deprem-%5	-112.23	-107.91	-44.07	-44.07
X-Rüzgar+%5	-1.45	-1.32	-0.55	-0.55
X-Rüzgar-%5	1.12	1.14	0.45	0.45
Y-Rüzgar+%5	-23.56	-22.67	-9.25	-9.25
Y-Rüzgar-%5	-27.18	-26.13	-10.67	-10.67

MATERIAL:E1 BS30 CS420 Fk: 18.78 18.22 cm²

BETONARME	: üstMsol	altMsol	Mac.	üstMsağ	altMsağ
Mdüz. (tm)	: -32.76	23.45	(2.42m)	24.44	-20.27
max M (tm)	: 121.95	-104.85	6.07	-125.51	94.31
fcd (kg/cm²)	: 200.00	200.00	200.00	200.00	200.00
As' (cm²)	: 0.00	0.00	0.00	0.00	0.00
As (cm²)	: 31.19	27.20	11.82	31.91	24.66

DONATI: 4ø16(mon.)+4ø16(göv.)+8ø20(sol üst ila.)
4ø20(düz)+5ø20(sol alt ila.)+ 2xø10/11(etriye)

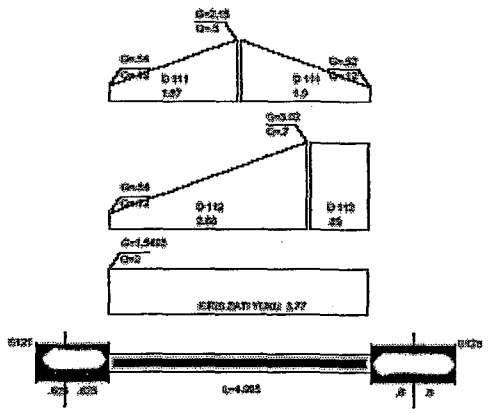

K129
Bw/D= 50/ 90 I= 84 J= 118 Tabla : B1/D1= 22/ 26cm B2/D2= 22/ 26cm

KOMBİNASYON	SolM (tm)	SağM (tm)	SolVd (t)	SağVd (t)
1.(G+G+G+G)	8.10	-18.77	8.58	-10.71
2.(Q+Q+Q+Q)	1.31	-3.10	1.42	-1.72
3.(o+Q+o+Q)	-0.16	-0.30	-0.09	-0.09
4.(Q+o+Q+o)	1.62	-2.65	1.57	-1.58
5.(Q+Q+o+Q)	1.57	-2.74	1.54	-1.60
6.(o+Q+Q+o)	-0.27	-0.40	-0.12	-0.12
7.(o+o+Q+Q)	1.61	-2.75	1.55	-1.60
Zemin itkisi	0.00	0.00	0.00	0.00
X-Deprem+%5	-14.42	-15.60	-5.85	-5.85
X-Deprem-%5	-1.72	-1.68	-0.66	-0.66
Y-Deprem+%5	-88.20	-95.91	-36.05	-36.05
Y-Deprem-%5	-108.28	-113.44	-42.20	-42.20
X-Rüzgar+%5	-3.10	-3.35	-1.26	-1.26
X-Rüzgar-%5	-0.56	-0.57	-0.22	-0.22
Y-Rüzgar+%5	-21.48	-23.60	-8.78	-8.78
Y-Rüzgar-%5	-25.05	-27.52	-10.24	-10.24

MATERIAL:E1 BS30 CS420 Fk: 8.89 17.57 cm²

BETONARME	: üstMsol	altMsol	Mac.	üstMsağ	altMsağ
Mdüz. (tm)	: -31.32	20.69	(2.13m)	49.17	-29.31
max M (tm)	: 113.01	-95.99	6.25	-135.31	96.54
fcd (kg/cm²)	: 200.00	200.00	200.00	200.00	200.00
As' (cm²)	: 0.00	0.00	0.00	0.00	0.00
As (cm²)	: 28.34	25.10	11.82	30.03	22.33

DONATI: 4ø16(mon.)+4ø16(göv.)+8ø20(sol üst ila.)+7ø20(sağ üst ila.)
4ø20(düz)+4ø20(sol alt ila.)+4ø20(sağ alt ila.)+ 2xø10/11(etriye)

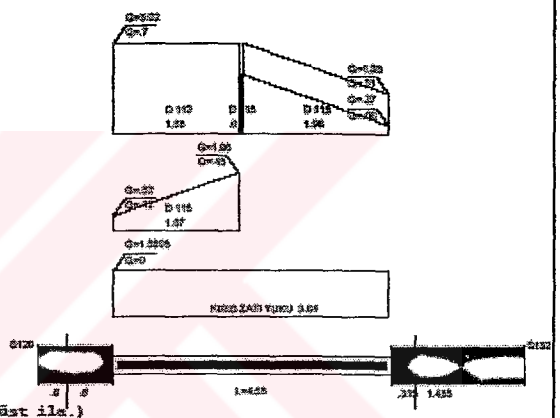

K133
Bw/D= 50/ 90 I= 3 J= 9 Tabla : B1/D1= 17/ 26cm B2/D2= 17/ 26cm

KOMBİNASYON	SolM (tm)	SağM (tm)	SolVd (t)	SağVd (t)
1.(G+G+G+G)	8.23	-2.95	7.42	-4.32
2.(Q+Q+Q+Q)	1.42	-0.25	1.20	-0.54
3.(o+Q+o+Q)	1.03	-0.47	1.03	-0.71
4.(Q+o+Q+o)	0.23	0.16	0.13	0.13
5.(Q+Q+o+Q)	0.49	0.37	0.22	0.23
6.(o+Q+Q+o)	1.14	-0.27	1.09	-0.65
7.(o+o+Q+Q)	1.09	-0.63	1.00	-0.73
Zemin itkisi	0.00	0.00	0.00	0.00
X-Deprem+%5	-6.55	-8.02	-2.53	-3.94
X-Deprem-%5	-0.43	-1.98	-0.65	-0.65
Y-Deprem+%5	-76.72	-78.01	-41.76	-41.76
Y-Deprem-%5	-83.98	-85.18	-45.66	-45.66
X-Rüzgar+%5	-1.45	-1.74	-0.86	-0.86
X-Rüzgar-%5	-0.22	-0.54	-0.21	-0.21
Y-Rüzgar+%5	-18.66	-18.98	-10.16	-10.16
Y-Rüzgar-%5	-20.38	-20.68	-11.08	-11.08

MATERIAL:E1 BS30 CS420 Fk: 11.95 7.08 cm²

BETONARME	: üstMsol	altMsol	Mac.	üstMsağ	altMsağ
Mdüz. (tm)	: -21.71	15.53	(2.15m)	27.78	-22.44
max M (tm)	: 93.63	-76.58	2.85	-88.75	82.60
fcd (kg/cm²)	: 200.00	200.00	200.00	200.00	200.00
As' (cm²)	: 0.00	0.00	0.00	0.00	0.00
As (cm²)	: 24.71	20.27	11.82	20.73	19.98

DONATI: 4ø14(mon.)+8ø16(göv.)+6ø20(sol üst ila.)
4ø20(düz)+3ø20(sol alt ila.)+ 2xø10/11(etriye)

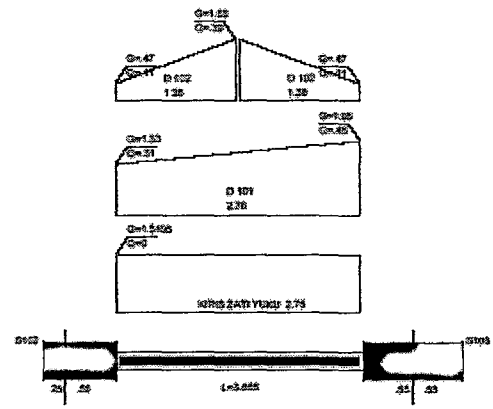

STAA-CAD V11

FİRMA : 03-23-2005

PROJE : kolonlukirişlisistem (kolonlukirişlisistem.ST4)

K132
Bw/D= 50/ 90 I= 9 J= 19 Tabla : B1/D1= 39/ 26cm B2/D2= 39/ 26cm

KOMBİNASYON	SolM (tm)	SağM (tm)	SolVd (t)	SağVd (t)
1.(G+G+G+G)	15.22	2.26	11.39	4.73
2.(Q+Q+Q+Q)	2.40	0.27	1.81	0.54
3.(o+Q+o+Q)	0.12	-0.05	0.04	0.04
4.(Q+o+Q+o)	2.25	0.31	1.76	0.49
5.(Q+Q+o+Q)	2.30	0.28	1.77	0.49
6.(o+Q+Q+o)	0.15	-0.05	0.05	0.05
7.(o+o+Q+Q)	2.30	0.30	1.78	0.50
Zemin itkisi	0.00	0.00	0.00	0.00
X-Deprem+%5	22.81	19.96	22.21	22.21
X-Deprem-%5	28.78	21.27	27.04	27.04
Y-Deprem+%5	-63.56	16.81	-24.29	-24.29
Y-Deprem-%5	-73.03	15.25	-30.02	-30.02
X-Rüzgar+%5	4.46	2.99	4.39	4.39
X-Rüzgar-%5	6.04	4.26	5.35	5.35
Y-Rüzgar+%5	-15.21	3.96	-5.84	-5.84
Y-Rüzgar-%5	-17.44	3.58	-7.20	-7.20

MATERIAL:E1 BS30 CS420 Fk: 4.57 18.64 cm²

BETONARME	:	üstMsol	altMsol	Mac.	üstMsağ	altMsağ
Mdus. (tm)	:	-34.20	21.21	(1.93m)	0.00	0.00
max M (tm)	:	90.65	-59.33	3.66	-19.24	23.84
fcd (kg/cm²)	:	200.00	200.00	200.00	200.00	200.00
As' (cm²)	:	0.00	0.00	0.00	0.00	0.00
As (cm²)	:	19.10	12.47	13.36	8.19	7.77

DONATI: 4ø14(man.)+4ø16(gös.)+5ø20(sol üst ila.)
7ø16(düz)+3ø20(sol alt ila.)+ 2xø10/20/11(etriye)

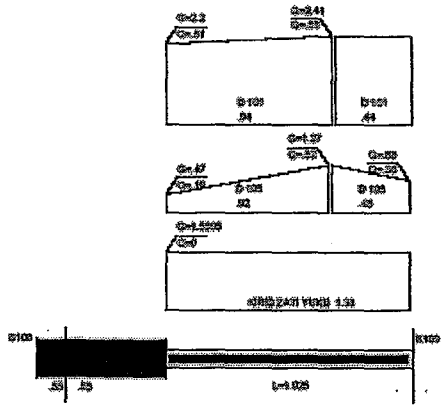

K132
Bw/D= 50/ 90 I= 19 J= 35 Tabla : B1/D1= 39/ 26cm B2/D2= 39/ 26cm

KOMBİNASYON	SolM (tm)	SağM (tm)	SolVd (t)	SağVd (t)
1.(G+G+G+G)	0.37	-23.11	6.62	-15.48
2.(Q+Q+Q+Q)	0.15	-4.11	1.07	-2.82
3.(o+Q+o+Q)	0.06	0.06	0.02	0.02
4.(Q+o+Q+o)	0.09	-4.19	1.04	-2.85
5.(Q+Q+o+Q)	0.13	-4.17	1.05	-2.84
6.(o+Q+Q+o)	0.08	0.12	0.02	0.03
7.(o+o+Q+Q)	0.09	-4.19	1.04	-2.85
Zemin itkisi	0.00	0.00	0.00	0.00
X-Deprem+%5	-19.96	-20.50	-7.10	-7.10
X-Deprem-%5	-18.22	-15.72	-5.96	-5.96
Y-Deprem+%5	-38.96	-76.24	-20.23	-20.23
Y-Deprem-%5	-41.02	-81.92	-21.59	-21.59
X-Rüzgar+%5	-4.05	-4.21	-1.45	-1.45
X-Rüzgar-%5	-3.71	-3.27	-1.22	-1.22
Y-Rüzgar+%5	-9.26	-18.16	-4.81	-4.81
Y-Rüzgar-%5	-9.72	-19.48	-5.13	-5.13

MATERIAL:E1 BS30 CS420 Fk: 11.75 10.72 cm²

BETONARME	:	üstMsol	altMsol	Mac.	üstMsağ	altMsağ
Mdus. (tm)	:	0.00	0.00	(2.16m)	23.94	-4.59
max M (tm)	:	41.55	-40.69	12.80	-109.22	61.12
fcd (kg/cm²)	:	200.00	200.00	200.00	200.00	200.00
As' (cm²)	:	0.00	0.00	0.00	0.00	0.00
As (cm²)	:	12.96	13.36	13.36	29.71	18.71

DONATI: 5ø14(man.)+4ø16(gös.)
5ø20(düz)+ 2xø10/20/11(etriye)

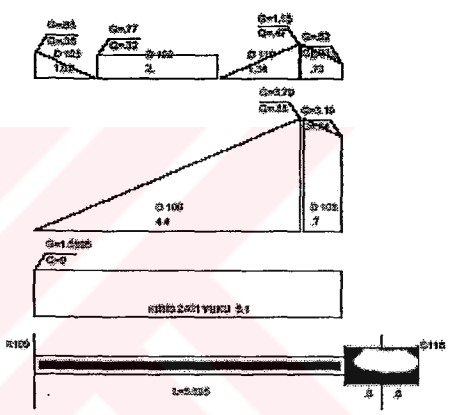

K131
Bw/D= 50/ 90 I= 25 J= 55 Tabla : B1/D1= 15/ 26cm

KOMBİNASYON	SolM (tm)	SağM (tm)	SolVd (t)	SağVd (t)
1.(G+G+G+G)	13.04	3.54	8.58	1.46
2.(Q+Q+Q+Q)	1.45	0.39	0.92	0.31
3.(o+Q+o+Q)	0.32	0.01	0.45	-0.18
4.(Q+o+Q+o)	1.17	0.40	0.51	0.51
5.(Q+Q+o+Q)	1.08	0.38	0.47	0.47
6.(o+Q+Q+o)	0.35	0.02	0.45	-0.17
7.(o+o+Q+Q)	1.58	0.42	0.98	0.26
Zemin itkisi	0.00	0.00	0.00	0.00
X-Deprem+%5	11.91	6.97	6.09	6.09
X-Deprem-%5	16.30	8.74	8.08	8.08
Y-Deprem+%5	-56.59	-20.93	-25.00	-25.00
Y-Deprem-%5	-61.80	-23.03	-27.26	-27.26
X-Rüzgar+%5	2.29	1.26	1.18	1.18
X-Rüzgar-%5	3.16	1.71	1.57	1.57
Y-Rüzgar+%5	-13.62	-5.03	-6.02	-6.02
Y-Rüzgar-%5	-14.84	-5.52	-6.57	-6.57

MATERIAL:E1 BS30 CS420 Fk: 5.87 0.00 cm²

BETONARME	:	üstMsol	altMsol	Mac.	üstMsağ	altMsağ
Mdus. (tm)	:	-22.12	11.79	(3.10m)	0.00	0.00
max M (tm)	:	76.42	-50.06	0.00	-19.84	26.99
fcd (kg/cm²)	:	200.00	200.00	0.00	200.00	200.00
As' (cm²)	:	0.00	0.00	0.00	0.00	0.00
As (cm²)	:	18.34	12.64	0.00	8.45	8.85

DONATI: 4ø14(man.)+4ø16(gös.)+8ø20(sol üst ila.)+1ø20(sağ üst ila.)
4ø16(düz)+1ø20(sol alt ila.)+1ø14(sağ alt ila.)+ 2xø10/20/11(etriye)

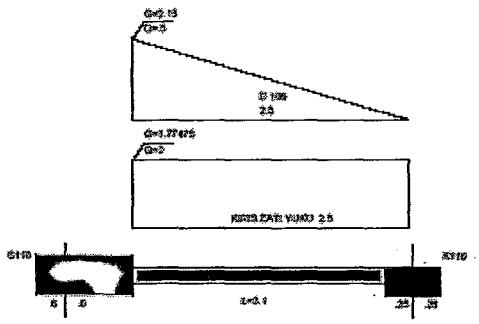

STAA-CAD V11

FİRMA : | 03-23-2005

PROJE : kolonlukirişlisistem (kolonlukirişlisistem.ST4)

K134
Bw/D= 50/ 30 I= 1721 J= 1724 Tabla : B1/D1= 7/ 26cm

KOMBİNASYON	SolM (tm)	SağM (tm)	SolVd (t)	SağVd (t)
1.(G+G+G+G)	0.58	-0.70	1.02	-1.14
2.(Q+Q+Q+Q)	0.10	-0.13	0.18	-0.21
3.(o+Q+o+Q)	0.11	-0.12	0.19	-0.20
4.(Q+o+Q+o)	0.00	0.00	0.00	0.00
5.(Q+Q+o+Q)	0.00	0.00	0.00	0.00
6.(o+Q+Q+o)	0.11	-0.12	0.18	-0.20
7.(o+o+Q+Q)	0.11	-0.12	0.18	-0.20
Zemin itkisi	0.00	0.00	0.00	0.00
X-Deprem+%5	-0.53	-0.53	-0.53	-0.53
X-Deprem-%5	-0.10	-0.10	-0.10	-0.10
Y-Deprem+%5	-7.92	-7.92	-7.92	-7.92
Y-Deprem-%5	-8.42	-8.42	-8.42	-8.42
X-Rüzgar+%5	-0.11	-0.11	-0.11	-0.11
X-Rüzgar-%5	-0.03	-0.03	-0.03	-0.03
Y-Rüzgar+%5	-1.94	-1.94	-1.94	-1.94
Y-Rüzgar-%5	-2.06	-2.06	-2.06	-2.06

MATERIAL:E1 BS30 CS420 Fk: 1.49 1.64 cm²

BETONARME	:	üstMsol	altMsol	Mac.	üstMsağ	altMsağ
Mdur. (tm)	:	-2.85	3.01	(0.97m)	2.91	-2.96
max M (tm)	:	9.12	-7.91	0.21	-9.26	7.80
fcd (kg/cm²)	:	200.00	200.00	200.00	200.00	200.00
As' (cm²)	:	0.00	0.00	0.00	0.00	0.00
As (cm²)	:	5.23	5.37	3.62	5.92	5.20

DONATI: 4ø14(mon.)
4ø16(düm)+ 2xø10/8(etriye)

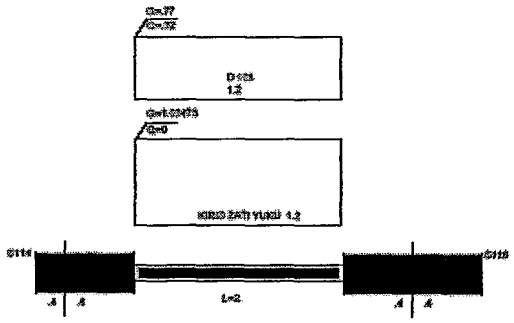

K135
Bw/D= 50/ 90 I= 54 J= 82 Tabla :

KOMBİNASYON	SolM (tm)	SağM (tm)	SolVd (t)	SağVd (t)
1.(G+G+G+G)	-8.94	-4.48	1.34	-4.83
2.(Q+Q+Q+Q)	-0.21	-0.51	-0.22	-0.23
3.(o+Q+o+Q)	-0.29	-0.56	-0.31	-0.31
4.(Q+o+Q+o)	0.20	0.08	0.09	0.09
5.(Q+Q+o+Q)	0.17	0.06	0.08	0.08
6.(o+Q+Q+o)	-0.29	-0.57	-0.31	-0.31
7.(o+o+Q+Q)	-0.16	-0.46	-0.20	-0.20
Zemin itkisi	0.00	0.00	0.00	0.00
X-Deprem+%5	-11.66	-12.36	-7.75	-7.75
X-Deprem-%5	-18.89	-12.02	-7.39	-7.39
Y-Deprem+%5	-11.19	-14.61	-8.32	-8.32
Y-Deprem-%5	-12.11	-15.04	-8.76	-8.76
X-Rüzgar+%5	-2.35	-2.49	-1.56	-1.56
X-Rüzgar-%5	-2.20	-2.41	-1.49	-1.49
Y-Rüzgar+%5	-2.70	-3.52	-2.01	-2.01
Y-Rüzgar-%5	-2.92	-3.62	-2.11	-2.11

MATERIAL:E1 BS30 CS420 Fk: 1.25 5.52 cm²

BETONARME	:	üstMsol	altMsol	Mac.	üstMsağ	altMsağ
Mdur. (tm)	:	0.00	0.00	(0.73m)	0.00	0.00
max M (tm)	:	11.37	-13.44	1.66	-20.09	11.01
fcd (kg/cm²)	:	200.00	200.00	200.00	200.00	200.00
As' (cm²)	:	0.00	0.00	0.00	0.00	0.00
As (cm²)	:	4.81	5.69	11.82	8.56	4.65

DONATI: 4ø14(mon.)+4ø16(göv.)+1ø20(sag üst ila.)
4ø20(düm)+ 2xø10/11(etriye)

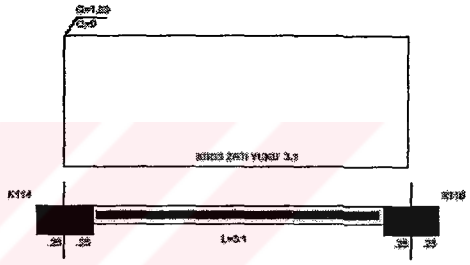

K137
Bw/D= 50/ 90 I= 117 J= 156 Tabla : B1/D1= 22/ 26cm B2/D2= 22/ 26cm

KOMBİNASYON	SolM (tm)	SağM (tm)	SolVd (t)	SağVd (t)
1.(G+G+G+G)	9.85	-17.02	7.93	-13.42
2.(Q+Q+Q+Q)	1.91	-2.61	1.34	-2.24
3.(o+Q+o+Q)	1.85	-2.52	1.35	-2.23
4.(Q+o+Q+o)	-0.11	-0.27	-0.08	-0.08
5.(Q+Q+o+Q)	-0.05	-0.16	-0.04	-0.04
6.(o+Q+Q+o)	1.85	-2.53	1.35	-2.23
7.(o+o+Q+Q)	1.68	-2.89	1.24	-2.34
Zemin itkisi	0.00	0.00	0.00	0.00
X-Deprem+%5	0.01	0.01	0.00	0.00
X-Deprem-%5	-0.01	-0.01	0.00	0.00
Y-Deprem+%5	-104.81	-103.30	-41.66	-41.66
Y-Deprem-%5	-104.79	-103.28	-41.66	-41.66
X-Rüzgar+%5	0.00	0.00	0.00	0.00
X-Rüzgar-%5	0.00	0.00	0.00	0.00
Y-Rüzgar+%5	-25.41	-25.04	-10.10	-10.10
Y-Rüzgar-%5	-25.40	-25.04	-10.10	-10.10

MATERIAL:E1 BS30 CS420 Fk: 10.13 16.78 cm²

BETONARME	:	üstMsol	altMsol	Mac.	üstMsağ	altMsağ
Mdur. (tm)	:	-31.84	21.58	(2.55m)	35.82	-18.49
max M (tm)	:	116.57	-95.94	6.05	-123.20	87.99
fcd (kg/cm²)	:	200.00	200.00	200.00	200.00	200.00
As' (cm²)	:	0.00	0.00	0.00	0.00	0.00
As (cm²)	:	29.50	24.78	11.82	30.50	23.11

DONATI: 5ø14(mon.)+4ø16(göv.)+7ø20(sol üst ila.)
4ø20(düm)+4ø20(sol alt ila.)+ 2xø10/11(etriye)

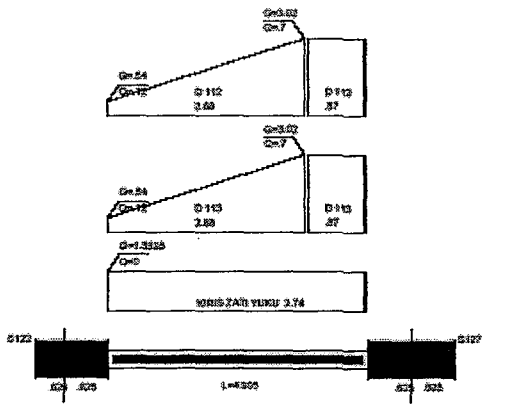

STAA-CAD V11

FİRMA : | 03-23-2005

PROJE : kolonlukirişlisistem (kolonlukirişlisistem.ST4)

K136
Bw/D= 50/ 90 I= 156 J= 157 Tabla : B1/D1= 25/ 26cm B2/D2= 25/ 26cm

KOMBİNASYON	SolM (tm)	SağM (tm)	SolVd (t)	SağVd (t)
1.(G+G+G+G)	18.25	-16.66	14.68	-11.64
2.(Q+Q+Q+Q)	3.10	-2.99	2.60	-1.98
3.(o+Q+o+Q)	0.06	-0.10	-0.01	-0.01
4.(Q+o+Q+o)	3.27	-2.66	2.69	-1.89
5.(Q+Q+o+Q)	3.29	-2.74	2.68	-1.90
6.(o+Q+Q+o)	0.04	-0.10	-0.01	-0.01
7.(o+o+Q+Q)	3.35	-2.68	2.70	-1.88
Zemin itkisi	0.00	0.00	0.00	0.00
X-Deprem+%5	0.01	0.01	0.00	0.00
X-Deprem-%5	-0.01	-0.01	0.00	0.00
Y-Deprem+%5	-98.02	-99.26	-36.22	-36.33
Y-Deprem-%5	-98.00	-99.24	-36.32	-36.32
X-Rüzgar+%5	0.00	0.00	0.00	0.00
X-Rüzgar-%5	0.00	0.00	0.00	0.00
Y-Rüzgar+%5	-23.81	-24.11	-8.82	-8.82
Y-Rüzgar-%5	-23.80	-24.10	-8.82	-8.82

MATERIAL:E1 B30 C3420 Fk: 11.57 15.44 cm²

BETONARME	:	üstMsol	altMsol	Mac.	üstMsağ	altMsağ
Mdüz. (tm)	:	-33.51	14.45	(2.58m)	29.97	-15.52
max M (tm)	:	119.63	-81.59	9.09	-118.91	84.27
fcd (kg/cm²)	:	200.00	200.00	200.00	200.00	200.00
As' (cm²)	:	0.00	0.00	0.00	0.00	0.00
As (cm²)	:	30.02	22.26	11.82	31.10	22.81

DONATI: 5ø14(mon.)+4ø16(göv.)+8ø20(sol üst ila.)+8ø20(sağ üst ila.)
4ø20(düz)+4ø20(sol alt ila.)+4ø20(sağ alt ila.)+ 2xø10/11(etriye)

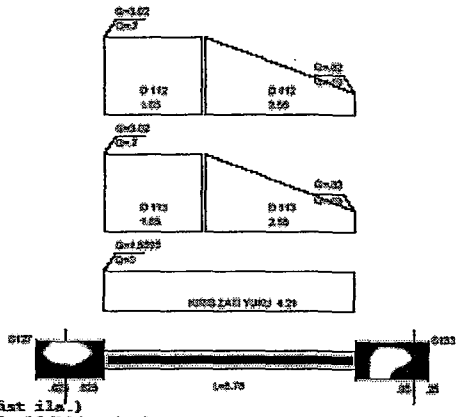

K138
Bw/D= 50/ 90 I= 8 J= 18 Tabla : B1/D1= 20/ 26cm B2/D2= 20/ 26cm

KOMBİNASYON	SolM (tm)	SağM (tm)	SolVd (t)	SağVd (t)
1.(G+G+G+G)	20.48	2.75	11.46	0.16
2.(Q+Q+Q+Q)	3.41	0.74	1.77	0.33
3.(o+Q+o+Q)	3.15	0.72	1.70	0.26
4.(Q+o+Q+o)	0.20	-0.01	0.05	0.05
5.(Q+Q+o+Q)	0.26	0.03	0.08	0.08
6.(o+Q+Q+o)	3.20	0.74	1.72	0.27
7.(o+o+Q+Q)	3.24	0.66	1.71	0.26
Zemin itkisi	0.00	0.00	0.00	0.00
X-Deprem+%5	0.00	0.00	0.00	0.00
X-Deprem-%5	0.00	0.00	0.00	0.00
Y-Deprem+%5	-52.92	-17.33	-18.22	-18.22
Y-Deprem-%5	-52.92	-17.33	-18.22	-18.22
X-Rüzgar+%5	0.00	0.00	0.00	0.00
X-Rüzgar-%5	0.00	0.00	0.00	0.00
Y-Rüzgar+%5	-12.85	-4.21	-4.42	-4.42
Y-Rüzgar-%5	-12.85	-4.21	-4.42	-4.42

MATERIAL:E1 B30 C3420 Fk: 7.57 0.00 cm²

BETONARME	:	üstMsol	altMsol	Mac.	üstMsağ	altMsağ
Mdüz. (tm)	:	-17.30	4.35	(3.86m)	0.00	0.00
max M (tm)	:	76.82	-34.49	0.00	-13.95	21.82
fcd (kg/cm²)	:	200.00	200.00	0.00	200.00	200.00
As' (cm²)	:	0.00	0.00	0.00	0.00	0.00
As (cm²)	:	20.20	10.10	0.00	5.91	7.10

DONATI: 4ø14(mon.)+4ø16(göv.)+5ø20(sol üst ila.)
4ø16(düz)+1ø20(sol alt ila.)+ 2xø10/20/11(etriye)

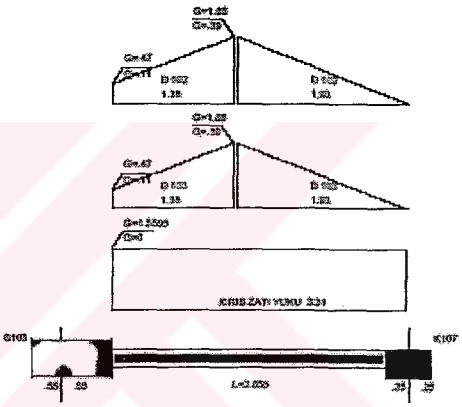

K139
Bw/D= 50/ 90 I= 82 J= 116 Tabla :

KOMBİNASYON	SolM (tm)	SağM (tm)	SolVd (t)	SağVd (t)
1.(G+G+G+G)	-0.94	-4.48	1.34	-4.83
2.(Q+Q+Q+Q)	-0.20	-0.50	-0.23	-0.23
3.(o+Q+o+Q)	-0.16	-0.44	-0.20	-0.20
4.(Q+o+Q+o)	-0.01	-0.05	-0.02	-0.02
5.(Q+Q+o+Q)	-0.03	-0.06	-0.03	-0.03
6.(o+Q+Q+o)	-0.18	-0.45	-0.20	-0.20
7.(o+o+Q+Q)	-0.17	-0.47	-0.20	-0.20
Zemin itkisi	0.00	0.00	0.00	0.00
X-Deprem+%5	11.66	12.38	7.76	7.76
X-Deprem-%5	10.88	12.01	7.39	7.39
Y-Deprem+%5	-12.11	-15.05	-8.76	-8.76
Y-Deprem-%5	-11.19	-14.61	-8.32	-8.32
X-Rüzgar+%5	2.35	2.49	1.56	1.56
X-Rüzgar-%5	2.20	2.41	1.49	1.49
Y-Rüzgar+%5	-2.92	-3.62	-2.11	-2.11
Y-Rüzgar-%5	-2.70	-3.52	-2.01	-2.01

MATERIAL:E1 B30 C3420 Fk: 1.09 5.70 cm²

BETONARME	:	üstMsol	altMsol	Mac.	üstMsağ	altMsağ
Mdüz. (tm)	:	0.00	0.00	(0.67m)	0.00	0.00
max M (tm)	:	11.27	-13.25	1.87	-20.02	11.02
fcd (kg/cm²)	:	200.00	200.00	200.00	200.00	200.00
As' (cm²)	:	0.00	0.00	0.00	0.00	0.00
As (cm²)	:	4.76	5.61	11.82	8.52	4.66

DONATI: 4ø14(mon.)+4ø16(göv.)+1ø20(sağ üst ila.)
4ø20(düz)+ 2xø10/11(etriye)

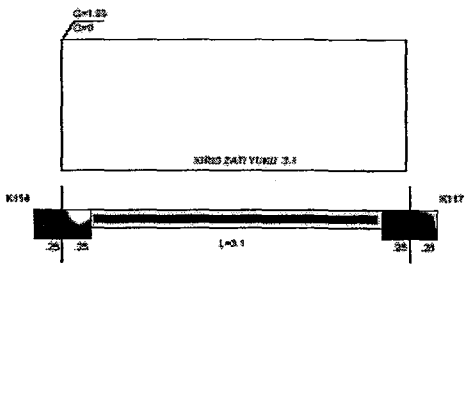

ST4-CAD V11

FİRMA : 03-23-2005

PROJE : kolonlukirişlisistem (kolonlukirişlisistem.ST4)

K140
Bw/D= 50/ 30 I= 1723 J= 1728 Tabla : B2/D2= 7/ 26cm

KOMBİNASYON	SolM (tm)	SağM (tm)	SolVd (t)	SağVd (t)
1.(G+G+G+G)	0.58	-0.70	1.02	-1.13
2.(Q+Q+Q+Q)	0.10	-0.13	0.17	-0.20
3.(o+Q+o+Q)	0.10	-0.12	0.16	-0.19
4.(Q+o+Q+o)	0.00	0.00	0.00	0.00
5.(Q+Q+o+Q)	0.00	0.00	0.00	0.00
6.(o+Q+Q+o)	0.10	-0.12	0.16	-0.19
7.(o+o+Q+Q)	0.10	-0.12	0.16	-0.20
Zemin itkisi	0.00	0.00	0.00	0.00
X-Deprem+%5	0.53	0.53	0.53	0.53
X-Deprem-%5	0.10	0.10	0.10	0.10
Y-Deprem+%5	-8.44	-8.44	-8.44	-8.44
Y-Deprem-%5	-7.92	-7.92	-7.92	-7.92
X-Rüzgar+%5	0.11	0.11	0.11	0.11
X-Rüzgar-%5	0.03	0.03	0.03	0.03
Y-Rüzgar+%5	-2.06	-2.06	-2.06	-2.06
Y-Rüzgar-%5	-1.94	-1.94	-1.94	-1.94

MATERIAL:E1 BS30 CS420 Fk: 1.49 1.64 cm²

BETONARME :	üstMsol	altMsol	Mac.	üstMsağ	altMsağ
Mdur. (tm) :	-3.85	3.01	(0.97m)	2.91	-2.97
max M (tm) :	9.12	-7.92	0.21	-9.26	7.81
fcd (kg/cm²) :	200.00	200.00	200.00	200.00	200.00
As' (cm²) :	0.00	0.00	0.00	0.00	0.00
As (cm²) :	5.83	5.28	3.62	5.92	5.21

DONATI: 4ø14(mon.)
4ø16(düz)+ 2xø10/8(etriye)

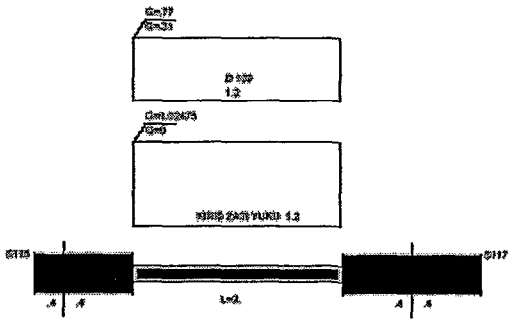

K143
Bw/D= 50/ 90 I= 17 J= 34 Tabla : B1/D1= 17/ 26cm B2/D2= 17/ 26cm

KOMBİNASYON	SolM (tm)	SağM (tm)	SolVd (t)	SağVd (t)
1.(G+G+G+G)	8.23	-2.99	7.44	-4.35
2.(Q+Q+Q+Q)	1.42	-0.25	1.19	-0.54
3.(o+Q+o+Q)	1.02	-0.46	1.03	-0.71
4.(Q+o+Q+o)	0.34	0.14	0.13	0.13
5.(Q+Q+o+Q)	0.48	0.36	0.23	0.23
6.(o+Q+Q+o)	1.14	-0.36	1.09	-0.65
7.(o+o+Q+Q)	1.10	-0.63	1.01	-0.73
Zemin itkisi	0.00	0.00	0.00	0.00
X-Deprem+%5	6.55	8.01	3.98	3.98
X-Deprem-%5	0.40	1.95	0.63	0.63
Y-Deprem+%5	-84.01	-85.20	-45.67	-45.67
Y-Deprem-%5	-76.72	-78.00	-41.76	-41.76
X-Rüzgar+%5	1.45	1.74	0.86	0.86
X-Rüzgar-%5	0.22	0.53	0.20	0.20
Y-Rüzgar+%5	-20.39	-20.69	-11.09	-11.09
Y-Rüzgar-%5	-18.66	-18.98	-10.16	-10.16

MATERIAL:E1 BS30 CS420 Fk: 11.96 7.10 cm²

BETONARME :	üstMsol	altMsol	Mac.	üstMsağ	altMsağ
Mdur. (tm) :	-21.72	15.59	(2.15m)	27.81	-22.43
max M (tm) :	53.66	-76.61	2.91	-88.82	82.57
fcd (kg/cm²) :	200.00	200.00	200.00	200.00	200.00
As' (cm²) :	0.00	0.00	0.00	0.00	0.00
As (cm²) :	24.72	20.27	11.62	20.74	19.98

DONATI: 4ø14(mon.)+8ø16(göv.)+6ø20(sol üst ila.)
4ø20(düz)+3ø20(sol alt ila.)+ 2xø10/11(etriye)

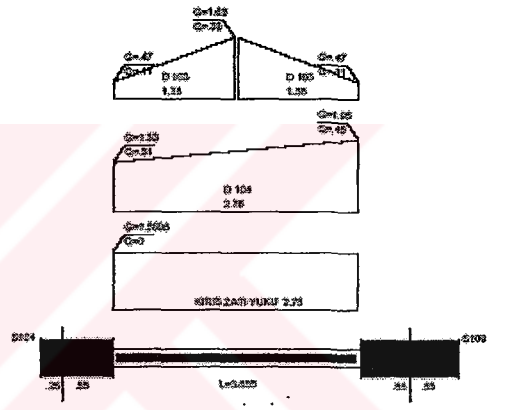

K142
Bw/D= 50/ 90 I= 34 J= 53 Tabla : B1/D1= 39/ 26cm B2/D2= 39/ 26cm

KOMBİNASYON	SolM (tm)	SağM (tm)	SolVd (t)	SağVd (t)
1.(G+G+G+G)	15.19	2.24	11.37	4.73
2.(Q+Q+Q+Q)	2.36	0.26	1.80	0.53
3.(o+Q+o+Q)	0.00	-0.12	-0.06	-0.06
4.(Q+o+Q+o)	2.26	0.37	1.85	0.58
5.(Q+Q+o+Q)	2.40	0.34	1.85	0.55
6.(o+Q+Q+o)	0.13	-0.05	0.04	0.04
7.(o+o+Q+Q)	2.19	0.22	1.66	0.42
Zemin itkisi	0.00	0.00	0.00	0.00
X-Deprem+%5	-22.80	-19.96	-22.21	-22.21
X-Deprem-%5	-28.79	-21.27	-27.05	-27.05
Y-Deprem+%5	-73.06	15.24	-38.04	-38.04
Y-Deprem-%5	-63.57	16.80	-24.30	-24.30
X-Rüzgar+%5	-4.46	-4.00	-4.39	-4.39
X-Rüzgar-%5	-6.04	-4.26	-5.35	-5.35
Y-Rüzgar+%5	-17.45	2.58	-7.21	-7.21
Y-Rüzgar-%5	-15.22	2.96	-5.85	-5.85

MATERIAL:E1 BS30 CS420 Fk: 4.57 18.62 cm²

BETONARME :	üstMsol	altMsol	Mac.	üstMsağ	altMsağ
Mdur. (tm) :	-34.20	21.33	(1.82m)	0.00	0.00
max M (tm) :	90.65	-59.29	3.74	-19.25	23.89
fcd (kg/cm²) :	200.00	200.00	200.00	200.00	200.00
As' (cm²) :	0.00	0.00	0.00	0.00	0.00
As (cm²) :	19.11	12.48	13.36	5.19	7.78

DONATI: 4ø14(mon.)+4ø16(göv.)+5ø20(sol üst ila.)
7ø16(düz)+3ø20(sol alt ila.)+ 2xø10/20/11(etriye)

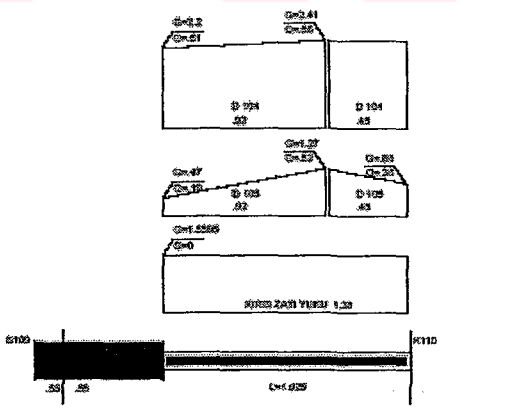

ST4-CAD V11

FİRMA : 03-23-2005

PROJE : kolonlukirişlisistem (kolonlukirişlisistem.ST4)

K142
Bw/D= 50/ 90 I= 52 J= 81 Tabla : B1/D1= 39/ 26cm B2/D2= 39/ 26cm

KOMBİNASYON	SolM (tm)	SağM (tm)	SolVd (t)	SağVd (t)
1.(G+G+G+G)	0.38	-23.12	6.62	-15.48
2.(Q+Q+Q+Q)	0.15	-4.09	1.06	-2.81
3.(o+Q+o+Q)	0.11	0.04	0.02	0.02
4.(Q+o+Q+o)	0.04	-4.14	1.02	-2.84
5.(Q+Q+o+Q)	0.08	-4.15	1.03	-2.84
6.(o+Q+Q+o)	0.07	0.05	0.02	0.02
7.(o+o+Q+Q)	0.15	-4.11	1.05	-2.81
Zemin itkisi	0.00	0.00	0.00	0.00
X-Deprem+%5	19.96	20.51	7.11	7.11
X-Deprem-%5	18.21	15.71	5.96	5.96
Y-Deprem+%5	-41.03	-81.94	-21.59	-21.59
Y-Deprem-%5	-38.95	-76.24	-20.23	-20.23
X-Rüzgar+%5	4.05	4.21	1.45	1.45
X-Rüzgar-%5	3.71	3.26	1.22	1.22
Y-Rüzgar+%5	-9.73	-19.49	-5.13	-5.13
Y-Rüzgar-%5	-9.25	-18.16	-4.81	-4.81

MATERIAL:ZI BS30 CS420 Fk: 11.75 10.72 cm²

BETONASME	: üstMsol	altMsol	Max.	üstMsağ	altMsağ
Mdus. (tm)	: 0.00	0.00	(2.16m)	22.93	-4.60
max M (tm)	: 41.56	-40.69	12.87	-109.20	61.14
fcd (kg/cm²)	: 200.00	200.00	200.00	200.00	200.00
As' (cm²)	: 0.00	0.00	0.00	0.00	0.00
As (cm²)	: 13.96	13.26	13.26	29.70	18.71

DONATI: 5ø14(mon.)+4ø16(göv.)
5ø20(düz)+ 2xø10/20/11(etriye)

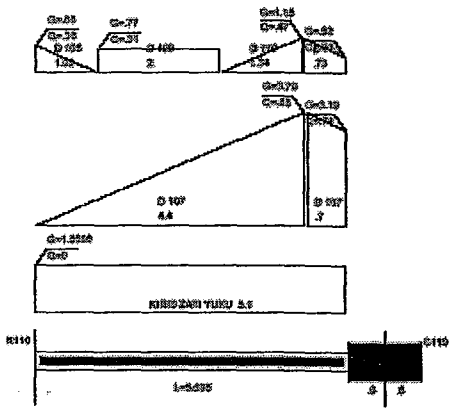

K141
Bw/D= 50/ 90 I= 81 J= 115 Tabla : B2/B2= 15/ 26cm

KOMBİNASYON	SolM (tm)	SağM (tm)	SolVd (t)	SağVd (t)
1.(G+G+G+G)	13.03	3.54	8.57	1.46
2.(Q+Q+Q+Q)	1.45	0.39	0.92	0.31
3.(o+Q+o+Q)	1.21	0.37	0.84	0.22
4.(Q+o+Q+o)	0.29	0.04	0.11	0.11
5.(Q+Q+o+Q)	0.28	0.03	0.07	0.07
6.(o+Q+Q+o)	1.22	0.37	0.85	0.23
7.(o+o+Q+Q)	1.57	0.42	0.96	0.35
Zemin itkisi	0.00	0.00	0.00	0.00
X-Deprem+%5	-11.90	-6.97	-6.09	-6.09
X-Deprem-%5	-16.20	-8.74	-8.06	-8.06
Y-Deprem+%5	-61.82	-28.04	-27.37	-27.37
Y-Deprem-%5	-56.59	-20.93	-25.01	-25.01
X-Rüzgar+%5	-2.29	-1.86	-1.17	-1.17
X-Rüzgar-%5	-3.16	-1.71	-1.57	-1.57
Y-Rüzgar+%5	-14.85	-5.53	-6.57	-6.57
Y-Rüzgar-%5	-13.62	-5.03	-6.02	-6.02

MATERIAL:ZI BS30 CS420 Fk: 5.57 0.00 cm²

BETONASME	: üstMsol	altMsol	Max.	üstMsağ	altMsağ
Mdus. (tm)	: -22.13	11.79	(2.10m)	0.00	0.00
max M (tm)	: 76.43	-50.09	0.00	-19.85	26.99
fcd (kg/cm²)	: 200.00	200.00	0.00	200.00	200.00
As' (cm²)	: 0.00	0.00	0.00	0.00	0.00
As (cm²)	: 18.34	12.65	0.00	8.45	8.85

DONATI: 4ø14(mon.)+4ø16(göv.)+8ø20(sol üst ila.)+1ø20(sag üst ila.)
4ø16(düz)+1ø20(sol alt ila.)+1ø14(sağ alt ila.)+ 2xø10/20/11(etriye)

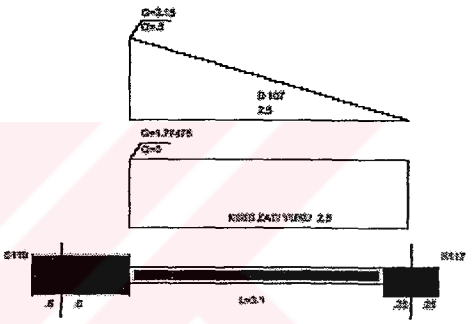

K145
Bw/D= 50/ 90 I= 156 J= 197 Tabla : B1/D1= 28/ 26cm B2/D2= 28/ 26cm

KOMBİNASYON	SolM (tm)	SağM (tm)	SolVd (t)	SağVd (t)
1.(G+G+G+G)	8.22	-15.12	7.29	-11.46
2.(Q+Q+Q+Q)	1.24	-2.51	1.07	-1.90
3.(o+Q+o+Q)	1.48	-2.16	1.19	-1.78
4.(Q+o+Q+o)	-0.20	-0.31	-0.10	-0.10
5.(Q+Q+o+Q)	-0.22	-0.29	-0.10	-0.10
6.(o+Q+Q+o)	1.44	-2.21	1.17	-1.80
7.(o+o+Q+Q)	1.34	-2.45	1.10	-1.87
Zemin itkisi	0.00	0.00	0.00	0.00
X-Deprem+%5	5.66	5.08	2.15	2.15
X-Deprem-%5	-7.19	-7.24	-2.89	-2.89
Y-Deprem+%5	-112.30	-107.97	-44.10	-44.10
Y-Deprem-%5	-97.04	-98.37	-38.12	-38.12
X-Rüzgar+%5	1.46	1.33	0.56	0.56
X-Rüzgar-%5	-1.12	-1.14	-0.45	-0.45
Y-Rüzgar+%5	-27.20	-26.15	-10.68	-10.68
Y-Rüzgar-%5	-23.57	-22.68	-9.26	-9.26

MATERIAL:ZI BS30 CS420 Fk: 18.50 18.24 cm²

BETONASME	: üstMsol	altMsol	Max.	üstMsağ	altMsağ
Mdus. (tm)	: -32.79	23.46	(2.42m)	24.47	-20.27
max M (tm)	: 122.00	-104.90	6.10	-125.60	94.36
fcd (kg/cm²)	: 200.00	200.00	200.00	200.00	200.00
As' (cm²)	: 0.00	0.00	0.00	0.00	0.00
As (cm²)	: 31.20	27.21	11.82	31.92	24.67

DONATI: 4ø16(mon.)+4ø16(göv.)+8ø20(sol üst ila.)
4ø20(düz)+5ø20(sol alt ila.)+ 2xø10/11(etriye)

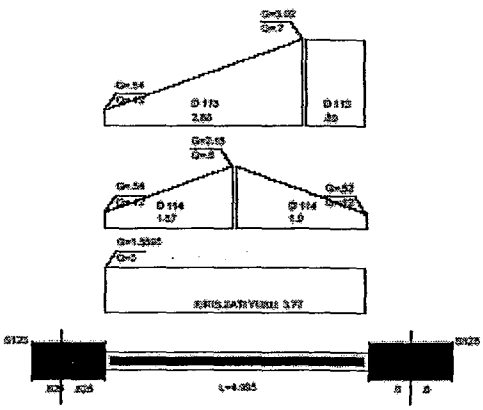

STAA-CAD V11

FİRMA : | 03-23-2005

PROJE : kolonlukirişlisistem (kolonlukirişlisistem.ST4)

K144
Bw/D= 50/ 90 I= 197 J= 198 Tabla : B1/D1= 22/ 26cm B2/D2= 22/ 26cm

KOMBİNASYON	SolM (tm)	SağM (tm)	SolVd (t)	SağVd (t)
1.(G+G+G+G)	8.10	-13.78	8.58	-10.71
2.(Q+Q+Q+Q)	1.31	-3.10	1.42	-1.72
3.(o+Q+o+Q)	-0.18	-0.32	-0.18	-0.18
4.(Q+o+Q+o)	1.64	-2.61	1.58	-1.57
5.(Q+Q+o+Q)	1.57	-2.74	1.54	-1.61
6.(o+Q+Q+o)	-0.27	-0.42	-0.14	-0.14
7.(o+o+Q+Q)	1.62	-2.73	1.55	-1.59
Zemin itkisi	0.00	0.00	0.00	0.00
X-Deprem+%5	14.44	15.62	5.85	5.85
X-Deprem-%5	1.71	1.67	0.66	0.66
Y-Deprem+%5	-102.34	-113.51	-42.23	-42.23
Y-Deprem-%5	-88.23	-95.94	-36.06	-36.06
X-Rüzgar+%5	3.10	3.36	1.26	1.26
X-Rüzgar-%5	0.56	0.57	0.22	0.22
Y-Rüzgar+%5	-25.07	-27.54	-10.25	-10.25
Y-Rüzgar-%5	-21.49	-23.61	-8.78	-8.78

MATERIAL:E1 B330 C3420 Fk: 8.91 17.59 cm²

BETONARME	: üstMsol	altMsol	Mac.	üstMsağ	altMsağ
Mdüz. (tm)	: -31.34	20.71	(2.12m)	49.20	-23.34
max M (tm)	: 113.09	-96.05	6.36	-135.89	96.61
fcd (kg/cm²)	: 200.00	200.00	200.00	200.00	200.00
As' (cm²)	: 0.00	0.00	0.00	0.00	0.00
As (cm²)	: 28.37	25.12	11.82	30.05	22.25

DONATI: 4ø16(mcm.)+4ø16(göv.)+8ø20(sol üst ila.)+8ø20(sag üst ila.)
4ø20(düz)+4ø20(sol alt ila.)+4ø20(sağ alt ila.)+ 2xø10/11(etriye)

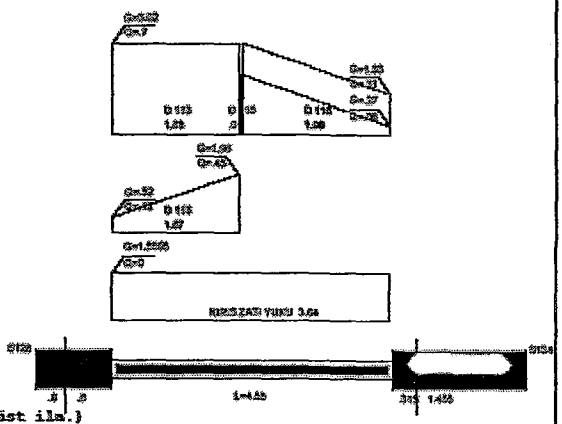

K146
Bw/D= 50/ 90 I= 240 J= 241 Tabla : B1/D1= 22/ 26cm

KOMBİNASYON	SolM (tm)	SağM (tm)	SolVd (t)	SağVd (t)
1.(G+G+G+G)	-3.18	-17.59	0.87	-9.82
2.(Q+Q+Q+Q)	-0.49	-2.14	-0.15	-1.10
3.(o+Q+o+Q)	-0.46	-1.07	-0.26	-0.36
4.(Q+o+Q+o)	-0.01	-1.02	0.23	-0.72
5.(Q+Q+o+Q)	-0.04	-1.07	0.21	-0.74
6.(o+Q+Q+o)	-0.42	-1.99	-0.09	-1.05
7.(o+o+Q+Q)	-0.49	-1.13	-0.28	-0.28
Zemin itkisi	0.00	0.00	0.00	0.00
X-Deprem+%5	8.86	20.44	6.90	6.90
X-Deprem-%5	2.81	5.22	2.12	2.12
Y-Deprem+%5	-27.65	-65.89	-22.24	-22.24
Y-Deprem-%5	-20.45	-50.00	-16.58	-16.58
X-Rüzgar+%5	1.88	4.32	1.46	1.46
X-Rüzgar-%5	0.67	1.51	0.51	0.51
Y-Rüzgar+%5	-6.70	-15.22	-5.39	-5.39
Y-Rüzgar-%5	-5.01	-12.23	-4.06	-4.06

MATERIAL:E1 B830 C3420 Fk: 0.84 8.15 cm²

BETONARME	: üstMsol	altMsol	Mac.	üstMsağ	altMsağ
Mdüz. (tm)	: 0.00	0.00	(0.57m)	18.25	-7.27
max M (tm)	: 24.79	-21.32	4.90	-86.62	51.06
fcd (kg/cm²)	: 200.00	200.00	200.00	200.00	200.00
As' (cm²)	: 0.00	0.00	0.00	0.00	0.00
As (cm²)	: 10.60	10.27	11.82	23.41	14.44

DONATI: 4ø14(mcm.)+4ø16(göv.)+2ø20(sol üst ila.)+6ø20(sag üst ila.)
4ø20(düz)+1ø16(sağ alt ila.)+ 2xø10/11(etriye)

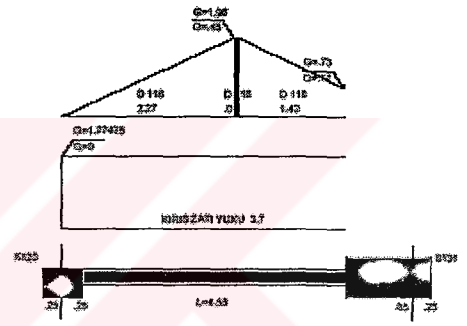

K147
Bw/D= 50/ 90 I= 52 J= 79 Tabla : B1/D1= 23/ 26cm

KOMBİNASYON	SolM (tm)	SağM (tm)	SolVd (t)	SağVd (t)
1.(G+G+G+G)	18.44	3.49	10.25	-0.82
2.(Q+Q+Q+Q)	2.42	0.61	1.20	0.21
3.(o+Q+o+Q)	2.15	0.49	1.11	0.12
4.(Q+o+Q+o)	0.26	0.11	0.09	0.09
5.(Q+Q+o+Q)	0.33	0.14	0.11	0.11
6.(o+Q+Q+o)	2.22	0.52	1.14	0.14
7.(o+o+Q+Q)	2.26	0.54	1.15	0.15
Zemin itkisi	0.00	0.00	0.00	0.00
X-Deprem+%5	4.49	2.02	1.50	1.50
X-Deprem-%5	-8.61	-3.94	-2.90	-2.90
Y-Deprem+%5	-68.12	-28.26	-21.12	-21.12
Y-Deprem-%5	-47.57	-21.19	-15.90	-15.90
X-Rüzgar+%5	1.15	0.52	0.39	0.39
X-Rüzgar-%5	-1.44	-0.66	-0.49	-0.49
Y-Rüzgar+%5	-15.25	-6.83	-5.10	-5.10
Y-Rüzgar-%5	-11.59	-5.16	-3.87	-3.87

MATERIAL:E1 B820 C3420 Fk: 9.14 0.25 cm²

BETONARME	: üstMsol	altMsol	Mac.	üstMsağ	altMsağ
Mdüz. (tm)	: -15.48	5.66	(3.98m)	0.00	0.00
max M (tm)	: 82.99	-46.53	5.79	-25.12	32.36
fcd (kg/cm²)	: 200.00	200.00	200.00	200.00	200.00
As' (cm²)	: 0.00	0.00	0.00	0.00	0.00
As (cm²)	: 23.46	13.48	11.82	10.75	10.62

DONATI: 4ø14(mcm.)+4ø16(göv.)+6ø20(sol üst ila.)+2ø20(sag üst ila.)
4ø20(düz)+1ø14(sol alt ila.)+ 2xø10/11(etriye)

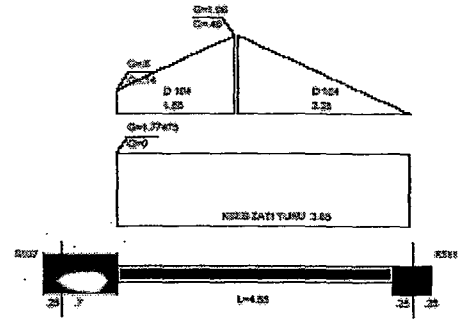

STAAD V11

FİRMA : | 03-23-2005

PROJE : kolonlukirişlisistem (kolonlukirişlisistem.ST4)

K149
Bw/D= 50/ 90 I= 114 J= 154 Tabla : B1/D1= 44/ 26cm

KOMBİNASYON	SolM (tm)	SağM (tm)	SolVd (t)	SağVd (t)
1.(G+G+G+G)	27.24	-27.96	14.85	-14.49
2.(Q+Q+Q+Q)	2.75	-3.71	1.94	-1.83
3.(o+Q+o+Q)	2.66	-3.74	1.92	-1.85
4.(Q+o+Q+o)	0.10	0.03	0.02	0.02
5.(Q+Q+o+Q)	0.11	0.07	0.02	0.02
6.(o+Q+Q+o)	2.68	-3.72	1.93	-1.84
7.(o+o+Q+Q)	2.72	-3.76	1.93	-1.84
Zemin itkisi	0.00	0.00	0.00	0.00
X-Deprem+%5	15.32	15.30	3.59	3.59
X-Deprem-%5	-2.66	-2.72	-0.63	-0.63
Y-Deprem+%5	-76.35	-76.59	-17.95	-17.95
Y-Deprem-%5	-55.00	-55.19	-12.93	-12.93
X-Rüzgar+%5	3.40	3.40	0.80	0.80
X-Rüzgar-%5	-0.15	-0.16	-0.04	-0.04
Y-Rüzgar+%5	-18.25	-18.30	-4.29	-4.29
Y-Rüzgar-%5	-13.24	-13.28	-3.11	-3.11

MATERIAL:EI B30 CS420 Fk: 9.63 9.66 cm²

BETONARME :	üstMsol	altMsol	Mac.	üstMsağ	altMsağ
Mdüz. (tm) :	-18.24	2.41	(4.22m)	20.57	-2.94
max M (tm) :	107.34	-51.84	19.14	-108.31	51.43
fcd (kg/cm²) :	200.00	200.00	200.00	200.00	200.00
As' (cm²) :	0.00	0.00	0.00	0.00	0.00
As (cm²) :	31.16	16.28	11.82	30.64	15.96

DONATI: 5ø14(mon.)+4ø16(göv.)+8ø20(sol üst ila.)
4ø20(düz)+2ø16(sol alt ila.)+ 2xø10/20/11(etriye)

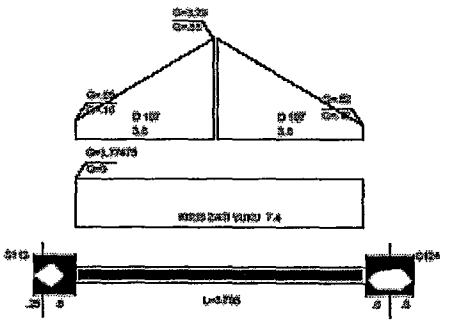

K148
Bw/D= 50/ 90 I= 154 J= 196 Tabla : B1/D1= 21/ 26cm

KOMBİNASYON	SolM (tm)	SağM (tm)	SolVd (t)	SağVd (t)
1.(G+G+G+G)	4.70	-9.02	4.50	-6.57
2.(Q+Q+Q+Q)	0.31	-1.17	0.36	-0.77
3.(o+Q+o+Q)	-0.01	-0.17	-0.04	-0.04
4.(Q+o+Q+o)	0.35	-0.97	0.41	-0.72
5.(Q+Q+o+Q)	0.20	-1.04	0.39	-0.75
6.(o+Q+Q+o)	-0.09	-0.24	-0.07	-0.07
7.(o+o+Q+Q)	0.47	-0.99	0.43	-0.70
Zemin itkisi	0.00	0.00	0.00	0.00
X-Deprem+%5	21.57	21.87	9.36	9.36
X-Deprem-%5	-2.10	-2.21	-0.92	-0.92
Y-Deprem+%5	-99.67	-100.02	-42.71	-42.71
Y-Deprem-%5	-71.20	-71.43	-30.51	-30.51
X-Rüzgar+%5	4.84	4.84	2.07	2.07
X-Rüzgar-%5	0.05	0.03	0.02	0.02
Y-Rüzgar+%5	-24.17	-24.25	-10.36	-10.36
Y-Rüzgar-%5	-17.42	-17.47	-7.46	-7.46

MATERIAL:EI B30 CS420 Fk: 7.91 13.44 cm²

BETONARME :	üstMsol	altMsol	Mac.	üstMsağ	altMsağ
Mdüz. (tm) :	-28.54	23.20	(2.13m)	26.78	-21.16
max M (tm) :	104.84	-95.44	2.91	-110.21	91.90
fcd (kg/cm²) :	200.00	200.00	200.00	200.00	200.00
As' (cm²) :	0.00	0.00	0.00	0.00	0.00
As (cm²) :	26.33	24.33	11.82	28.25	23.80

DONATI: 5ø14(mon.)+6ø20(göv.)+8ø20(sol üst ila.)+7ø20(sağ üst ila.)
4ø20(düz)+4ø20(sol alt ila.)+4ø20(sağ alt ila.)+ 2xø10/11(etriye)

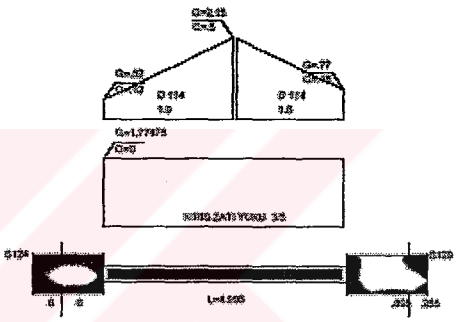

K501
Bw/D= 50/ 90 I= 22 J= 38 Tabla : B2/D2= 9/ 26cm

KOMBİNASYON	SolM (tm)	SağM (tm)	SolVd (t)	SağVd (t)
1.(G+G+G+G)	12.30	8.84	9.12	6.03
2.(Q+Q+Q+Q)	1.75	1.65	1.21	1.21
3.(o+Q+o+Q)	0.90	0.79	0.60	0.60
4.(Q+o+Q+o)	0.84	0.85	0.60	0.60
5.(Q+Q+o+Q)	1.16	1.12	0.82	0.82
6.(o+Q+Q+o)	1.13	1.07	0.78	0.78
7.(o+o+Q+Q)	1.18	1.08	0.81	0.81
Zemin itkisi	0.00	0.00	0.00	0.00
X-Deprem+%5	-85.32	-80.50	-59.22	-59.22
X-Deprem-%5	-102.28	-97.12	-71.19	-71.19
Y-Deprem+%5	-38.52	-37.85	-27.28	-27.28
Y-Deprem-%5	-18.44	-18.12	-13.06	-13.06
X-Rüzgar+%5	-16.70	-15.76	-11.59	-11.59
X-Rüzgar-%5	-20.02	-19.04	-13.95	-13.95
Y-Rüzgar+%5	-9.00	-8.85	-6.37	-6.37
Y-Rüzgar-%5	-4.30	-4.23	-3.05	-3.05

MATERIAL:EI B30 CS420 Fk: 25.33 0.00 cm²

BETONARME :	üstMsol	altMsol	Mac.	üstMsağ	altMsağ
Mdüz. (tm) :	-48.92	37.79	(2.80m)	49.81	-41.57
max M (tm) :	116.28	-91.16	13.73	-89.16	107.60
fcd (kg/cm²) :	200.00	200.00	200.00	200.00	200.00
As' (cm²) :	0.00	0.00	0.00	0.00	0.00
As (cm²) :	23.04	17.88	11.82	14.78	22.35

DONATI: 5ø16(mon.)+10ø16(göv.)+5ø20(sol üst ila.)+10ø20(sağ üst ila.)
4ø20(düz)+2ø20(sol alt ila.)+4ø20(sağ alt ila.)+ 2xø16/11(etriye)

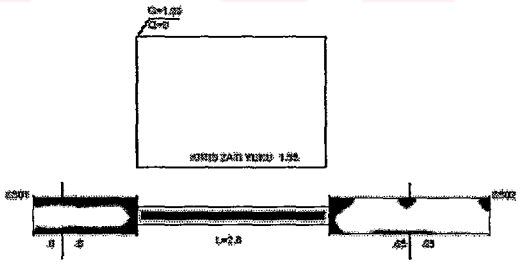

STAA-CAD V11

FİRMA :

03-23-2005

PROJE : kolonlukirişlisistem (kolonlukirişlisistem.ST4)

S4001 KOLONU
I/J :1445/1403 Bx/By :120/175 βx:1.002 βy:1.002 Hk :3.25 m
Material:E1 BS30 CS420 Güç.Kol. Cx:1.000 Cy:1.000

KOMBİNASYON	maxNd (t)	üstMx	altMx	üstMy	altMy (tm)
1.(G+G+G+G)	52.34	-1.13	-0.72	-9.02	-4.81
2.(Q+Q+Q+Q)	5.26	-1.24	-0.85	-1.67	-0.77
3.(o+Q+o+Q)	1.00	-0.72	-0.12	-0.28	-0.46
4.(Q+o+Q+o)	2.65	-0.01	-0.37	-0.93	-0.06
5.(Q+Q+o+Q)	2.38	-0.96	-0.27	-0.39	-0.56
6.(o+Q+Q+o)	3.29	-0.21	-0.08	-1.00	-0.32
7.(o+o+Q+Q)	3.24	-0.29	-0.54	-1.04	-0.15
Zemin ithisi	0.00	0.00	0.00	0.00	0.00
X-Deprem+%5	-5.23	-5.26	-19.65	-0.58	-4.40
X-Deprem-%5	-4.53	-3.79	-22.15	-0.84	-0.09
Y-Deprem+%5	-9.72	0.64	2.26	0.23	-34.92
Y-Deprem-%5	-10.55	4.67	5.25	0.55	-40.23
X-Rüzgar+%5	-0.49	-1.65	-2.43	-0.08	-0.29
X-Rüzgar-%5	-0.40	-1.66	-2.61	-0.10	-0.06
Y-Rüzgar+%5	-0.97	0.63	0.23	-0.03	-3.09
Y-Rüzgar-%5	-1.10	0.64	0.62	0.00	-3.56

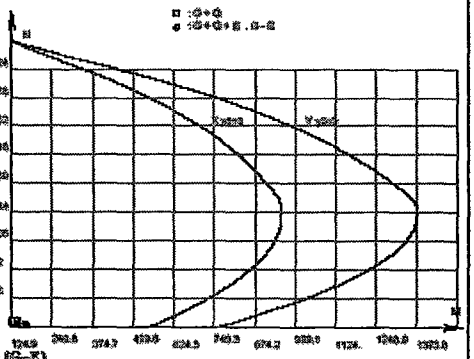

BETONARME :	X-(G+Q)	X-(G+Q+E)	Y-(G+Q)	Y-(G+Q+E)	X-(G-E)	Y-(G-E)
max. Nd (t) :	81.700	53.079	81.700	47.053	41.832	36.557
minor M (tm):	-15.300	-4.870	-3.563	3.670	-8.005	4.596
major M (tm):	-4.167	-23.728	-15.200	-45.005	-20.305	-43.833
fcd (kg/cm²):	200.000	200.000	200.000	200.000	200.000	200.000
μ :	0.0025	0.0025	0.0025	0.0025	0.0025	0.0025
As (cm²):	52.500	52.500	52.500	52.500	52.500	52.500

Cqa=1.000

DONATI :2x19ø20+2x15ø20 (gövde) + ø10/20/10(etriye)

S3001 KOLONU
I/J :1016/972 Bx/By :120/175 βx:1.025 βy:1.027 Hk :3.25 m
Material:E1 BS30 CS420 Güç.Kol. Cx:1.000 Cy:1.000

KOMBİNASYON	maxNd (t)	üstMx	altMx	üstMy	altMy (tm)
1.(G+G+G+G)	589.90	-0.72	-0.70	-3.59	-2.91
2.(Q+Q+Q+Q)	59.90	-0.70	-0.69	-0.65	-0.59
3.(o+Q+o+Q)	24.78	-0.40	-0.03	-0.09	-0.21
4.(Q+o+Q+o)	26.39	-0.02	-0.38	-0.36	-0.04
5.(Q+Q+o+Q)	33.15	-0.06	-0.05	-0.32	-0.23
6.(o+Q+Q+o)	35.21	-0.28	-0.51	-0.46	-0.08
7.(o+o+Q+Q)	32.97	-0.52	-0.26	-0.13	-0.40
Zemin ithisi	0.00	0.00	0.00	0.00	0.00
X-Deprem+%5	-117.61	41.82	38.65	2.15	-1.92
X-Deprem-%5	-116.99	53.16	42.14	-0.12	-0.34
Y-Deprem+%5	-171.38	12.94	11.33	11.75	-7.22
Y-Deprem-%5	-172.02	-0.59	1.15	14.44	-9.09
X-Rüzgar+%5	-11.97	4.90	2.65	0.49	-0.48
X-Rüzgar-%5	-11.61	6.30	3.44	0.04	-0.10
Y-Rüzgar+%5	-19.99	1.82	1.41	3.52	-3.07
Y-Rüzgar-%5	-20.49	-0.16	0.29	4.15	-3.61

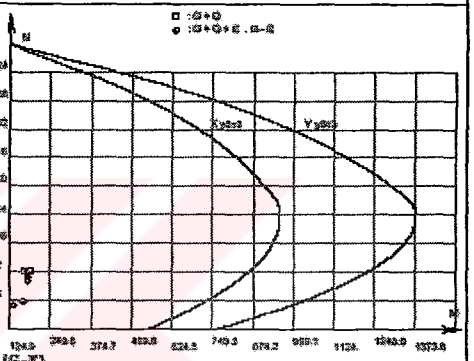

BETONARME :	X-(G+Q)	X-(G+Q+E)	Y-(G+Q)	Y-(G+Q+E)	X-(G-E)	Y-(G-E)
max. Nd (t) :	883.268	742.767	883.268	797.797	413.303	358.691
minor M (tm):	-6.069	-4.122	-2.116	-0.824	-1.056	-1.232
major M (tm):	-45.047	-54.571	-59.621	53.351	41.175	11.205
fcd (kg/cm²):	200.000	200.000	200.000	200.000	200.000	200.000
μ :	0.0025	0.0025	0.0025	0.0025	0.0025	0.0025
As (cm²):	52.500	52.500	52.500	52.500	52.500	52.500

Cqa=0.599

DONATI :2x19ø20+2x15ø20 (gövde) + ø10/20/10(etriye)

S2001 KOLONU
I/J :586/543 Bx/By :120/175 βx:1.048 βy:1.053 Hk :3.25 m
Material:E1 BS30 CS420 Güç.Kol. Cx:1.000 Cy:1.000

KOMBİNASYON	maxNd (t)	üstMx	altMx	üstMy	altMy (tm)
1.(G+G+G+G)	1114.90	-0.62	-0.60	-3.61	-2.71
2.(Q+Q+Q+Q)	112.52	-0.61	-0.60	-0.64	-0.58
3.(o+Q+o+Q)	47.05	-0.37	-0.01	-0.09	-0.30
4.(Q+o+Q+o)	48.89	0.00	-0.36	-0.36	-0.03
5.(Q+Q+o+Q)	63.02	-0.24	-0.49	-0.48	-0.03
6.(o+Q+Q+o)	64.74	-0.43	-0.22	-0.12	-0.40
7.(o+o+Q+Q)	64.13	-0.02	-0.02	-0.32	-0.22
Zemin ithisi	0.00	0.00	0.00	0.00	0.00
X-Deprem+%5	-295.81	51.67	55.06	1.29	-1.07
X-Deprem-%5	-300.26	66.35	67.80	-0.27	-0.28
Y-Deprem+%5	-421.26	16.14	15.14	-1.20	5.23
Y-Deprem-%5	-415.89	-1.10	-0.05	0.65	4.28
X-Rüzgar+%5	-36.62	8.91	7.61	0.43	-0.44
X-Rüzgar-%5	-36.92	11.34	9.46	0.03	-0.10
Y-Rüzgar+%5	-60.47	3.08	2.69	2.46	-1.72
Y-Rüzgar-%5	-60.05	-0.34	0.08	3.10	-2.20

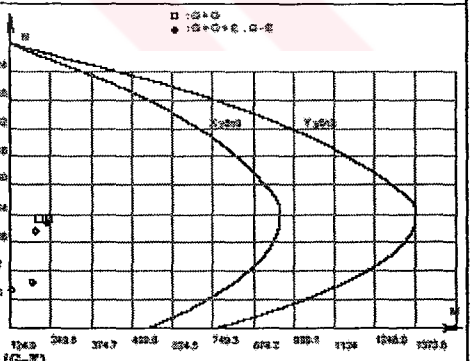

BETONARME :	X-(G+Q)	X-(G+Q+E)	Y-(G+Q)	Y-(G+Q+E)	X-(G-E)	Y-(G-E)
max. Nd (t) :	1666.525	1482.450	1666.525	1603.453	703.153	582.150
minor M (tm):	-6.078	-8.015	-1.854	-16.335	-2.722	14.599
major M (tm):	-85.095	75.605	-112.625	105.233	67.263	2.790
fcd (kg/cm²):	200.000	200.000	200.000	200.000	200.000	200.000
μ :	0.0025	0.0025	0.0025	0.0025	0.0025	0.0025
As (cm²):	52.500	52.500	52.500	52.500	52.500	52.500

Cqa=0.598

DONATI :2x19ø20+2x15ø20 (gövde) + ø10/15/10(etriye)

STAA-CAD V11

FİRMA : | 03-23-2005

PROJE : kolonlukirişlisistem (kolonlukirişlisistem.ST4)

S1001 KOLONU
I/J :156/120 Bx/By :120/175 βx:1.073 βy:1.081 Hk :3.25 m
Material:E1 BS30 CS420 Güç.Kol. Cx:1.000 Cy:1.000

KOMBİNASYON	maxNd (t)	üstMx	altMx	üstMy	altMy (tm)
1.(G+G+G+G)	1601.82	0.12	0.20	-3.12	-2.74
2.(Q+Q+Q+Q)	159.03	-0.32	-0.30	-0.54	-0.59
3.(o+Q+o+Q)	66.46	-0.27	0.10	-0.05	-0.20
4.(Q+o+Q+o)	68.34	0.10	-0.26	-0.32	-0.02
5.(Q+Q+o+Q)	88.35	-0.25	-0.09	-0.09	-0.38
6.(o+Q+Q+o)	90.32	0.11	0.12	-0.25	-0.23
7.(o+o+Q+Q)	90.32	-0.11	-0.26	-0.43	-0.03
Zemin itkisi	0.00	0.00	0.00	0.00	0.00
X-Deprem+%5	-509.72	65.25	80.21	1.03	-0.46
X-Deprem-%5	-522.80	83.23	97.06	-0.26	-0.15
Y-Deprem+%5	-720.29	19.62	18.97	-11.12	16.95
Y-Deprem-%5	-704.69	-1.73	-1.07	-9.60	16.60
X-Rüzgar+%5	-73.46	13.27	14.10	0.43	-0.30
X-Rüzgar-%5	-75.33	16.78	17.15	0.02	-0.07
Y-Rüzgar+%5	-122.10	4.48	4.17	0.36	0.99
Y-Rüzgar-%5	-119.46	-0.47	-0.12	0.94	0.67

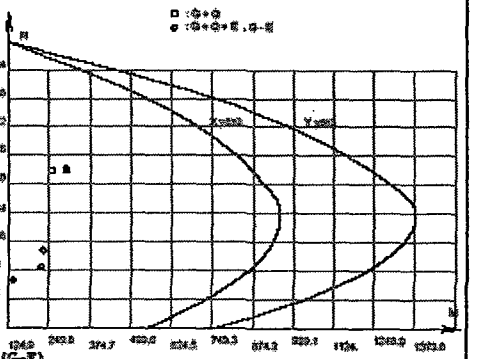

BETONARME :	X-(G+Q)	X-(G+Q+E)	Y-(G+Q)	Y-(G+Q+E)	X-(G-E)	Y-(G-E)
max. Nd (t) :	2393.938	1173.640	2393.938	2416.733	918.839	721.242
minor M (tm) :	-4.201	-3.121	-0.345	-19.070	-2.617	19.144
major M (tm) :	122.091	97.385	-161.591	162.129	97.239	14.485
fcd (kg/cm²) :	200.000	200.000	200.000	200.000	200.000	200.000
μ :	0.0025	0.0025	0.0025	0.0025	0.0025	0.0025
As (cm²) :	52.500	52.500	52.500	52.500	52.500	52.500

Cqa=0.595

DONATI :2x19ø20+2x15ø20 (gövde) + ø10/15/10(etriye)

S501 KOLONU
I/J :22/11 Bx/By :120/175 βx:1.086 βy:1.095 Hk :3.25 m
Material:E1 BS30 CS420 Güç.Kol. Cx:1.000 Cy:1.000

KOMBİNASYON	maxNd (t)	üstMx	altMx	üstMy	altMy (tm)
1.(G+G+G+G)	1811.61	1.11	1.22	-2.57	-2.70
2.(Q+Q+Q+Q)	177.02	-0.01	0.02	-0.45	-0.58
3.(o+Q+o+Q)	73.32	0.21	-0.14	-0.30	-0.01
4.(Q+o+Q+o)	75.07	-0.15	0.22	0.00	-0.30
5.(Q+Q+o+Q)	98.29	0.05	-0.20	-0.38	-0.02
6.(o+Q+Q+o)	100.13	-0.19	0.07	-0.02	-0.28
7.(o+o+Q+Q)	99.55	0.27	0.26	-0.21	-0.21
Zemin itkisi	0.00	0.00	0.00	0.00	0.00
X-Deprem+%5	-617.58	72.00	101.22	-0.51	2.95
X-Deprem-%5	-635.04	91.59	121.72	-0.76	1.16
Y-Deprem+%5	-866.67	19.71	19.95	-25.59	41.23
Y-Deprem-%5	-842.29	-3.56	-4.29	-25.29	43.27
X-Rüzgar+%5	-93.99	14.92	19.13	0.01	0.53
X-Rüzgar-%5	-97.35	18.84	23.12	-0.12	0.25
Y-Rüzgar+%5	-155.63	4.67	4.65	-3.94	7.78
Y-Rüzgar-%5	-150.90	-0.86	-0.97	-3.76	8.17

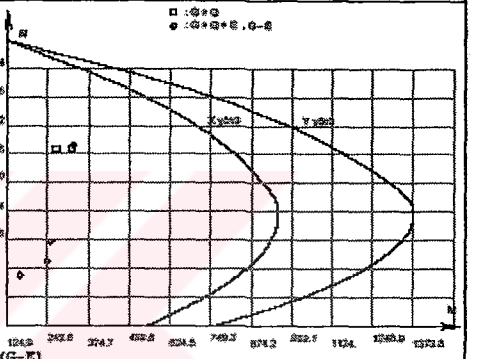

BETONARME :	X-(G+Q)	X-(G+Q+E)	Y-(G+Q)	Y-(G+Q+E)	X-(G-E)	Y-(G-E)
max. Nd (t) :	2704.218	1275.548	2704.218	2758.876	992.411	763.764
minor M (tm) :	-4.116	-1.751	1.746	5.638	-1.271	21.650
major M (tm) :	137.915	123.229	-182.535	186.224	122.624	38.601
fcd (kg/cm²) :	200.000	200.000	200.000	200.000	200.000	200.000
μ :	0.0025	0.0025	0.0025	0.0025	0.0025	0.0025
As (cm²) :	52.500	52.500	52.500	52.500	52.500	52.500

Cqa=0.593

DONATI :2x19ø20+2x15ø20 (gövde) + ø10/15/10(etriye)

S101 KOLONU
I/J :1/ Bx/By :120/175 βx:1.096 βy:1.136 Hk :3.25 m
Material:E1 BS30 CS420 Güç.Kol. Cx:1.000 Cy:1.000

KOMBİNASYON	maxNd (t)	üstMx	altMx	üstMy	altMy (tm)
1.(G+G+G+G)	1947.96	1.83	0.73	-8.25	1.17
2.(Q+Q+Q+Q)	186.76	0.27	0.11	-0.52	0.10
3.(o+Q+o+Q)	77.20	0.39	0.15	-0.25	0.16
4.(Q+o+Q+o)	78.82	-0.13	-0.05	-0.09	-0.07
5.(Q+Q+o+Q)	102.13	-0.09	-0.02	-0.08	-0.04
6.(o+Q+Q+o)	104.73	0.26	0.15	-0.26	0.12
7.(o+o+Q+Q)	104.18	0.25	0.06	-0.33	0.14
Zemin itkisi	0.00	0.00	0.00	0.00	0.00
X-Deprem+%5	-684.54	-53.32	289.30	-27.76	50.94
X-Deprem-%5	-714.26	-62.02	353.63	-2.78	-10.18
Y-Deprem+%5	-935.83	-3.25	39.06	-210.67	445.36
Y-Deprem-%5	-900.46	7.00	-37.23	-240.33	517.94
X-Rüzgar+%5	-107.10	-9.77	56.56	-5.97	11.29
X-Rüzgar-%5	-112.32	-11.48	69.36	-1.04	-0.87
Y-Rüzgar+%5	-171.93	-0.76	9.25	-49.17	106.53
Y-Rüzgar-%5	-164.58	1.62	-8.81	-56.12	123.68

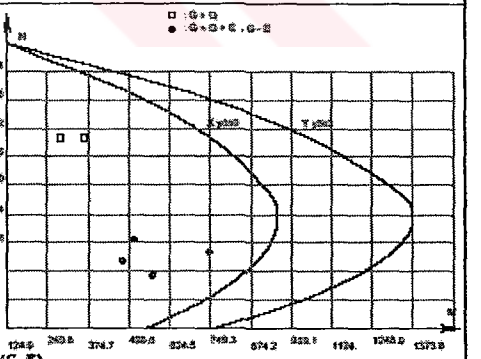

BETONARME :	X-(G+Q)	X-(G+Q+E)	Y-(G+Q)	Y-(G+Q+E)	X-(G-E)	Y-(G-E)
max. Nd (t) :	2906.432	1245.758	2906.432	1159.553	1038.905	817.231
minor M (tm) :	-4.945	-8.833	3.001	-36.442	-8.126	39.722
major M (tm) :	148.228	354.520	-196.184	519.267	354.292	446.419
fcd (kg/cm²) :	200.000	200.000	200.000	200.000	200.000	200.000
μ :	0.0025	0.0025	0.0025	0.0025	0.0025	0.0025
As (cm²) :	52.500	52.500	52.500	52.500	52.500	52.500

Cqa=0.600

DONATI :2x19ø20+2x15ø20 (gövde) + ø10/15/10(etriye)

STAA-CAD V11

FİRMA : | 03-23-2005

PROJE : kolonlukirişlisistem (kolonlukirişlisistem.ST4)

S4002 KOLONU
I/J :1489/1447 Bx/By :130/80 βx:1.002 βy:1.002 Hk :3.25 m
Material:E1 BS20 C3420 Güç.Kol. Cx:1.000 Cy:1.000

KOMBİNASYON	maxNd (t)	üstMx	altMx	üstMy	altMy (tm)
1.(G+G+G+G)	23.03	-27.84	-19.40	-31.38	-24.93
2.(Q+Q+Q+Q)	2.08	-4.53	-3.16	-5.83	-4.63
3.(o+Q+o+Q)	0.19	-1.92	-1.64	-2.34	-2.20
4.(Q+o+Q+o)	1.54	-2.57	-1.48	-2.95	-1.99
5.(Q+Q+o+Q)	0.69	-2.94	-2.13	-2.98	-2.66
6.(o+Q+Q+o)	1.67	-3.21	-2.06	-3.84	-3.05
7.(o+o+Q+Q)	1.11	-2.81	-2.05	-3.77	-2.69
Zemin itkisi	0.00	0.00	0.00	0.00	0.00
X-Deprem+%5	-5.30	21.98	7.35	-4.80	-4.05
X-Deprem-%5	-6.89	24.98	7.57	-4.51	-3.57
Y-Deprem+%5	7.31	14.08	8.78	0.40	-2.77
Y-Deprem-%5	9.22	10.26	8.42	0.07	-3.34
X-Rüzgar+%5	-0.60	1.45	0.42	-0.66	-0.55
X-Rüzgar-%5	-0.77	1.53	0.34	-0.62	-0.50
Y-Rüzgar+%5	0.90	1.53	0.98	-0.26	-0.45
Y-Rüzgar-%5	1.14	1.28	1.08	-0.32	-0.53

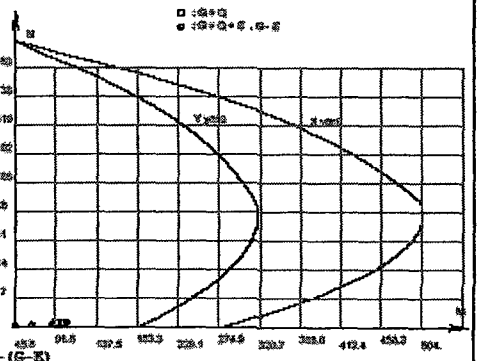

BETONARME :	X-(G+Q)	X-(G+Q+E)	Y-(G+Q)	Y-(G+Q+E)	X-(G-E)	Y-(G-E)
max. Nd (t) :	35.558	31.987	35.558	19.807	13.828	11.505
minor M (tm):	-53.268	-32.784	-46.216	-10.382	-32.755	-25.889
major M (tm):	-46.216	-57.342	-53.268	-42.013	-0.075	-19.089
fcd (kg/cm²):	200.000	200.000	200.000	200.000	200.000	200.000
μ :	0.0025	0.0025	0.0025	0.0025	0.0025	0.0025
As (cm²):	26.000	26.000	26.000	26.000	26.000	26.000

Cq=1.000

DONATI :2x10ø20+2x7ø20 (govde) + ø10/20/10(etriye)

S3002 KOLONU
I/J :1060/1017 Bx/By :130/80 βx:1.025 βy:1.027 Hk :3.25 m
Material:E1 BS20 C3420 Güç.Kol. Cx:1.000 Cy:1.000

KOMBİNASYON	maxNd (t)	üstMx	altMx	üstMy	altMy (tm)
1.(G+G+G+G)	294.58	-15.74	-15.72	-20.11	-20.00
2.(Q+Q+Q+Q)	30.15	-2.56	-2.55	-3.73	-3.71
3.(o+Q+o+Q)	13.19	-1.12	-1.40	-1.52	-1.82
4.(Q+o+Q+o)	13.56	-1.41	-1.12	-1.86	-1.55
5.(Q+Q+o+Q)	16.80	-1.72	-1.56	-2.45	-2.42
6.(o+Q+Q+o)	17.75	-1.55	-1.67	-2.27	-2.04
7.(o+o+Q+Q)	16.94	-1.79	-1.82	-2.05	-2.28
Zemin itkisi	0.00	0.00	0.00	0.00	0.00
X-Deprem+%5	-47.86	58.90	54.77	-0.81	-1.08
X-Deprem-%5	-52.32	71.91	66.18	-2.38	-2.38
Y-Deprem+%5	-66.09	18.60	17.78	26.30	24.20
Y-Deprem-%5	-60.82	3.08	4.12	28.16	25.76
X-Rüzgar+%5	-6.27	6.83	5.66	-0.15	-0.22
X-Rüzgar-%5	-7.09	8.38	6.86	-0.34	-0.35
Y-Rüzgar+%5	-5.11	2.62	2.41	3.55	2.82
Y-Rüzgar-%5	-3.95	0.45	0.72	3.81	3.00

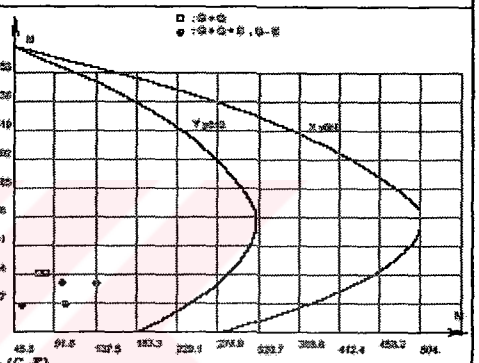

BETONARME :	X-(G+Q)	X-(G+Q+E)	Y-(G+Q)	Y-(G+Q+E)	X-(G-E)	Y-(G-E)
max. Nd (t) :	441.208	364.893	441.208	373.407	212.806	199.036
minor M (tm):	-34.113	-21.458	-26.126	-21.252	-20.474	4.432
major M (tm):	-26.126	-90.209	-34.113	-51.995	57.746	8.203
fcd (kg/cm²):	200.000	200.000	200.000	200.000	200.000	200.000
μ :	0.0025	0.0025	0.0025	0.0025	0.0025	0.0025
As (cm²):	26.000	26.000	26.000	26.000	26.000	26.000

Cq=0.597

DONATI :2x10ø20+2x7ø20 (govde) + ø10/20/10(etriye)

S2002 KOLONU
I/J :630/587 Bx/By :130/80 βx:1.048 βy:1.053 Hk :3.25 m
Material:E1 BS20 C3420 Güç.Kol. Cx:1.000 Cy:1.000

KOMBİNASYON	maxNd (t)	üstMx	altMx	üstMy	altMy (tm)
1.(G+G+G+G)	559.94	-14.75	-14.67	-18.61	-18.43
2.(Q+Q+Q+Q)	57.20	-2.36	-2.35	-3.45	-3.43
3.(o+Q+o+Q)	28.79	-1.04	-1.32	-1.42	-1.71
4.(Q+o+Q+o)	25.12	-1.32	-1.03	-1.73	-1.41
5.(Q+Q+o+Q)	32.05	-1.43	-1.54	-2.09	-1.85
6.(o+Q+Q+o)	32.78	-1.67	-1.70	-1.89	-2.11
7.(o+o+Q+Q)	32.81	-1.62	-1.46	-2.32	-2.29
Zemin itkisi	0.00	0.00	0.00	0.00	0.00
X-Deprem+%5	-92.93	75.55	77.74	-0.05	-0.18
X-Deprem-%5	-97.23	93.08	94.31	-1.98	-1.96
Y-Deprem+%5	-197.97	23.84	23.21	29.98	30.82
Y-Deprem-%5	-192.85	2.96	3.58	32.29	32.95
X-Rüzgar+%5	-13.04	12.14	11.51	0.06	0.00
Z-Rüzgar-%5	-14.03	14.99	14.04	-0.26	-0.27
Y-Rüzgar+%5	-25.04	4.47	4.27	5.81	5.37
Y-Rüzgar-%5	-23.64	0.43	0.71	6.26	5.74

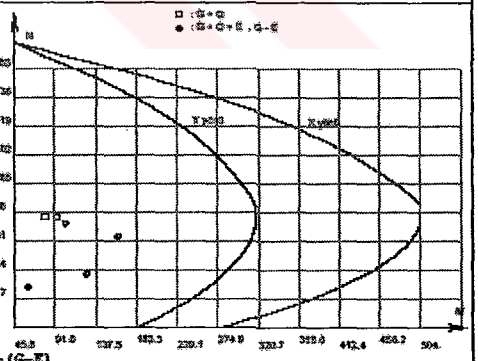

BETONARME :	X-(G+Q)	X-(G+Q+E)	Y-(G+Q)	Y-(G+Q+E)	X-(G-E)	Y-(G-E)
max. Nd (t) :	838.732	691.433	838.732	787.048	406.712	395.978
minor M (tm):	-31.576	-19.901	-24.426	-20.604	-18.546	10.109
major M (tm):	-45.292	-111.331	-32.711	-54.810	81.101	14.240
fcd (kg/cm²):	200.000	200.000	200.000	200.000	200.000	200.000
μ :	0.0025	0.0025	0.0025	0.0025	0.0025	0.0025
As (cm²):	26.000	26.000	26.000	26.000	26.000	26.000

Cq=0.599

DONATI :2x10ø20+2x7ø20 (govde) + ø12/20/10(etriye)

STAA-CAD V17

FİRMA :

03-23-2005

PROJE : kolonlukirişlisistem (kolonlukirişlisistem.ST4)

S1002 KOLONU
I/J :200/159 Bx/By :130/80 βx:1.078 βy:1.081 Hk :3.25 m
Material:E1 BS20 CS420 Güç.Kol. Cx:1.000 Cy:1.000

KOMBİNASYON	maxNd (t)	üstMx	altMx	üstMy	altMy (tm)
1.(G+G+G+G)	817.32	-11.56	-11.35	-14.35	-14.09
2.(Q+Q+Q+Q)	63.02	-1.80	-1.76	-2.69	-2.65
3.(o+Q+o+Q)	34.66	-0.78	-1.04	-1.08	-1.36
4.(Q+o+Q+o)	36.09	-1.05	-0.75	-1.38	-1.96
5.(Q+Q+o+Q)	46.25	-1.32	-1.32	-1.42	-1.63
6.(o+Q+Q+o)	47.87	-1.26	-1.09	-1.85	-1.82
7.(o+o+Q+Q)	47.37	-1.08	-1.18	-1.65	-1.29
Zemin ithisi	0.00	0.00	0.00	0.00	0.00
X-Deprem+%5	-133.16	87.69	96.54	2.00	2.80
X-Deprem-%5	-135.64	109.48	117.49	-0.56	-0.48
Y-Deprem+%5	-357.63	26.42	25.94	37.69	41.41
Y-Deprem-%5	-354.69	0.79	1.04	40.73	44.36
X-Rüzgar+%5	-19.44	16.79	17.32	0.50	0.47
X-Rüzgar-%5	-20.01	20.91	21.18	0.00	0.01
Y-Rüzgar+%5	-58.64	5.89	5.69	8.95	9.16
Y-Rüzgar-%5	-57.82	0.07	0.24	9.65	9.80

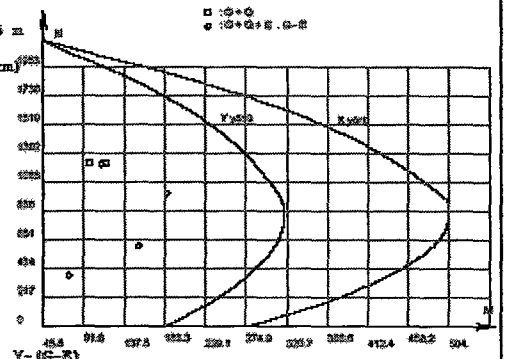

BETONAME :	X-(G+Q)	X-(G+Q+E)	Y-(G+Q)	Y-(G+Q+E)	X-(G-E)	Y-(G-E)
max. Nd (t) :	1223.677	1002.599	1223.677	1221.652	599.948	377.956
minor M (tm):	-24.387	-16.264	-19.059	-14.150	-13.169	15.724
major M (tm):	-66.079	-130.681	-47.723	-61.109	107.278	28.728
fcd (kg/cm²):	200.000	200.000	200.000	200.000	200.000	200.000
μ :	0.0025	0.0025	0.0025	0.0025	0.0025	0.0025
As (cm²):	26.000	26.000	26.000	26.000	26.000	26.000

Cqa=0.598

DONATI :2x10ø20+2x7ø20 (gövde) + ø12/20/10(etriye)

S502 KOLONU
I/J :38/22 Bx/By :130/80 βx:1.086 βy:1.095 Hk :3.25 m
Material:E1 BS20 CS420 Güç.Kol. Cx:1.000 Cy:1.000

KOMBİNASYON	maxNd (t)	üstMx	altMx	üstMy	altMy (tm)
1.(G+G+G+G)	939.11	-7.89	-7.51	-9.56	-9.19
2.(Q+Q+Q+Q)	94.70	-1.19	-1.13	-1.80	-1.75
3.(o+Q+o+Q)	40.27	-0.76	-0.45	-0.99	-0.65
4.(Q+o+Q+o)	40.34	-0.47	-0.72	-0.68	-0.95
5.(Q+Q+o+Q)	53.22	-0.67	-0.75	-1.11	-0.84
6.(o+Q+Q+o)	53.37	-0.92	-0.91	-0.89	-1.08
7.(o+o+Q+Q)	54.02	-0.66	-0.68	-1.32	-1.28
Zemin ithisi	0.00	0.00	0.00	0.00	0.00
X-Deprem+%5	-134.68	88.02	104.23	3.90	4.26
X-Deprem-%5	-127.68	110.76	127.48	0.54	0.72
Y-Deprem+%5	-489.88	23.61	23.40	46.55	55.10
Y-Deprem-%5	-498.19	-3.29	-4.21	50.54	59.31
X-Rüzgar+%5	-19.38	17.50	19.82	0.85	0.95
X-Rüzgar-%5	-17.97	22.00	24.36	0.21	0.25
Y-Rüzgar+%5	-90.59	5.43	5.41	11.43	13.03
Y-Rüzgar-%5	-92.58	-0.85	-0.99	12.43	14.02

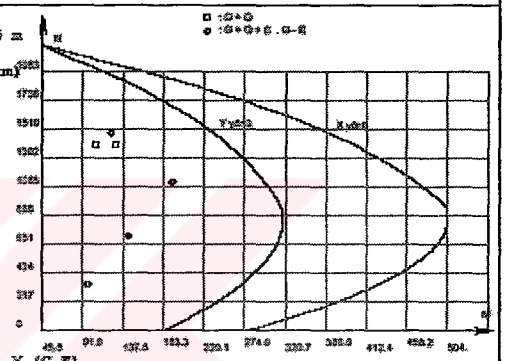

BETONAME :	X-(G+Q)	X-(G+Q+E)	Y-(G+Q)	Y-(G+Q+E)	X-(G-E)	Y-(G-E)
max. Nd (t) :	1405.218	1123.331	1405.218	1492.839	710.518	347.014
minor M (tm):	-16.276	-11.658	-12.945	-4.436	-4.018	-10.968
major M (tm):	-75.882	-126.126	-54.804	-70.247	97.474	51.023
fcd (kg/cm²):	200.000	200.000	200.000	200.000	200.000	200.000
μ :	0.0025	0.0025	0.0025	0.0025	0.0025	0.0025
As (cm²):	26.000	26.000	26.000	26.000	26.000	26.000

Cqa=0.597

DONATI :2x10ø20+2x7ø20 (gövde) + ø12/20/10(etriye)

S102 KOLONU
I/J :3/ Bx/By :130/80 βx:1.096 βy:1.107 Hk :3.25 m
Material:E1 BS20 CS420 Güç.Kol. Cx:1.000 Cy:1.000

KOMBİNASYON	maxNd (t)	üstMx	altMx	üstMy	altMy (tm)
1.(G+G+G+G)	1028.15	-2.56	-0.97	-2.72	-0.90
2.(Q+Q+Q+Q)	102.20	-0.38	-0.14	-0.48	-0.18
3.(o+Q+o+Q)	43.41	-0.38	-0.14	-0.44	-0.16
4.(Q+o+Q+o)	43.51	0.00	0.00	-0.02	-0.02
5.(Q+Q+o+Q)	57.06	-0.22	-0.12	-0.07	-0.03
6.(o+Q+Q+o)	58.60	-0.24	-0.12	-0.47	-0.18
7.(o+o+Q+Q)	58.18	-0.10	-0.05	-0.38	-0.13
Zemin ithisi	0.00	0.00	0.00	0.00	0.00
X-Deprem+%5	-115.59	-12.40	170.82	0.13	5.35
X-Deprem-%5	-39.04	-13.04	210.94	-0.23	-0.95
Y-Deprem+%5	-646.59	1.48	24.61	1.24	78.77
Y-Deprem-%5	-677.16	2.24	-23.02	1.66	86.26
X-Rüzgar+%5	-15.68	-2.04	33.36	0.04	1.19
X-Rüzgar-%5	-10.48	-2.14	41.34	-0.03	-0.07
Y-Rüzgar+%5	-128.83	0.36	5.82	0.57	18.91
Y-Rüzgar-%5	-136.16	0.50	-5.43	0.68	20.68

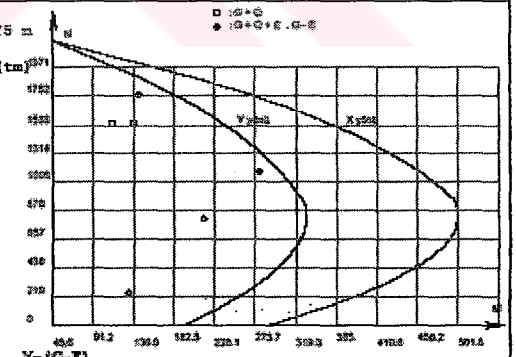

BETONAME :	X-(G+Q)	X-(G+Q+E)	Y-(G+Q)	Y-(G+Q+E)	X-(G-E)	Y-(G-E)
max. Nd (t) :	1537.532	1179.316	1537.532	1766.632	809.748	248.184
minor M (tm):	-4.516	-0.106	-4.194	21.928	4.536	-23.896
major M (tm):	-82.027	-212.054	-59.964	-87.338	169.950	85.445
fcd (kg/cm²):	200.000	200.000	200.000	200.000	200.000	200.000
μ :	0.0025	0.0025	0.0031	0.0031	0.0025	0.0031
As (cm²):	26.000	26.000	32.203	32.203	26.000	32.203

Cqa=0.600

DONATI :2x9ø20+2x9ø20 (gövde) + ø12/20/10(etriye)

STAA-CAD V11

FİRMA : | 03-23-2005

PROJE : kolonlukirişlisistem (kolonlukirişlisistem.ST4)

GÜÇLÜ KOLONLARIN, KAT KESME GÜVENLİĞİ (t)

(Mra+Mru) > 1.2x (Mri +Mlj)

Kat	Vsx	Vkx	αx	Vsy	Vky	αy
1	1852.18	1852.18	1.00	1717.33	1717.33	1.00
2	1838.23	1838.23	1.00	1703.68	1703.68	1.00
3	1816.15	1816.15	1.00	1681.94	1681.94	1.00
4	1788.23	1788.23	1.00	1654.56	1654.56	1.00
5	1757.82	1757.82	1.00	1624.61	1624.61	1.00
6	1727.28	1727.28	1.00	1594.16	1594.16	1.00
7	1697.15	1697.15	1.00	1564.09	1564.09	1.00
8	1667.48	1667.48	1.00	1534.86	1534.86	1.00
9	1637.97	1637.97	1.00	1506.35	1506.35	1.00
10	1608.38	1608.38	1.00	1478.39	1478.39	1.00
11	1578.37	1578.37	1.00	1450.41	1450.41	1.00
12	1547.50	1547.50	1.00	1422.34	1422.34	1.00
13	1516.86	1516.86	1.00	1394.36	1394.36	1.00
14	1486.51	1486.51	1.00	1366.81	1366.81	1.00
15	1456.54	1456.54	1.00	1340.26	1340.26	1.00
16	1426.73	1426.73	1.00	1314.82	1314.82	1.00
17	1397.24	1397.24	1.00	1290.25	1290.25	1.00
18	1368.56	1368.56	1.00	1266.60	1266.60	1.00
19	1340.15	1340.15	1.00	1243.93	1243.93	1.00
20	1311.67	1311.67	1.00	1222.28	1222.28	1.00
21	1283.50	1283.50	1.00	1200.67	1200.67	1.00
22	1255.59	1255.59	1.00	1178.98	1178.98	1.00
23	1228.00	1228.00	1.00	1157.62	1157.62	1.00
24	1199.36	1199.36	1.00	1135.98	1135.98	1.00
25	1170.26	1170.26	1.00	1112.76	1112.76	1.00
26	1139.33	1139.33	1.00	1088.30	1088.30	1.00
27	1106.76	1106.76	1.00	1062.26	1062.26	1.00
28	1071.38	1071.38	1.00	1034.02	1034.02	1.00
29	1033.12	1033.12	1.00	1003.04	1003.04	1.00
30	991.89	991.89	1.00	969.09	969.09	1.00
31	947.63	947.63	1.00	930.17	930.17	1.00
32	898.99	898.99	1.00	886.68	886.68	1.00
33	845.83	845.83	1.00	839.42	839.42	1.00
34	786.56	786.56	1.00	786.06	786.06	1.00
35	718.81	718.81	1.00	725.03	725.03	1.00
36	642.30	642.30	1.00	652.07	652.07	1.00
37	552.69	552.69	1.00	565.85	565.85	1.00
38	447.26	447.26	1.00	462.24	462.24	1.00
39	321.90	321.90	1.00	336.73	336.73	1.00
40	176.31	176.31	1.00	185.70	185.70	1.00

Vs/Vk> .70 KOŞULU SAĞLANMAKTADIR. GÜÇLÜ KOLONLAR, (1/α) ile ÇARPILMIŞTIR.

GÜÇLÜ KOLON KONTROLU (tm)

Yön	Kolon	Mrc	Kiriş	Mrb	AÇIKLAMA
+X	S201(813.02)+S101(815.05)	1628.07	K101(46.3)+K105(70.61)	140.29	✓
-X	S201(813.02)+S101(815.05)	1628.07	K101(50.95)+K105(62.66)	136.33	✓
+Y	S201(923.6)+S101(1184.07)	2107.67		0	✓
-Y	S201(923.6)+S101(1184.07)	2107.67		0	✓
+X	S202(413.72)+S102(410.79)	824.51	K101(79.78)+K102(62.66)	170.99	✓
-X	S202(413.72)+S102(410.79)	824.51	K101(70.72)+K102(70.61)	169.67	✓
+Y	S202(145.09)+S102(136.89)	281.98	K123(70.72)	84.86	✓
-Y	S202(145.09)+S102(136.89)	281.98	K123(79.78)	95.73	✓
+X	S203(444.06)+S103(439.26)	883.32	K102(70.61)+K103(62.66)	159.92	✓
-X	S203(444.06)+S103(439.26)	883.32	K102(62.66)+K103(70.61)	159.92	✓
+Y	S203(310.77)+S103(292.82)	603.59		0	✓
-Y	S203(310.77)+S103(292.82)	603.59		0	✓
+X	S204(413.01)+S104(410.1)	823.11	K103(70.61)+K104(70.72)	169.66	✓
-X	S204(413.01)+S104(410.1)	823.11	K103(62.66)+K104(79.78)	171	✓
+Y	S204(144.46)+S104(136.18)	280.64	K143(70.72)	84.86	✓
-Y	S204(144.46)+S104(136.18)	280.64	K143(79.78)	95.73	✓
+X	S205(798.61)+S105(800.63)	1599.24	K104(50.95)+K105(62.66)	136.33	✓
-X	S205(798.61)+S105(800.63)	1599.24	K104(46.3)+K105(70.61)	140.29	✓
+Y	S205(879.85)+S105(1133.18)	2013.03		0	✓
-Y	S205(879.85)+S105(1133.18)	2013.03		0	✓
+X	S206(163.59)+S106(181.67)	345.26	K105(62.66)	75.23	✓
-X	S206(163.59)+S106(181.67)	345.26	K105(62.32)	74.86	✓
+Y	S206(219.56)+S106(232.28)	451.84	K128(46.3)	55.56	✓
-Y	S206(219.56)+S106(232.28)	451.84	K128(79.78)	95.73	✓
+X	S207(162.17)+S107(189.16)	351.33	K106(62.32)	74.83	✓
-X	S207(162.17)+S107(189.16)	351.33	K106(62.66)	75.27	✓
+Y	S207(218.65)+S107(239.56)	458.22	K147(46.3)	55.56	✓
-Y	S207(218.65)+S107(239.56)	458.22	K147(79.78)	95.73	✓
+X	S208(551.72)+S108(545.02)	1096.74	K107(61.11)	73.47	✓
-X	S208(551.72)+S108(545.02)	1096.74	K107(93.54)	112.38	✓
+Y	S208(560.06)+S108(556.84)	1116.9	K132(75.27)+K133(70.34)	174.72	✓
-Y	S208(560.06)+S108(556.84)	1116.9	K132(70.34)+K133(70.72)	169.26	✓

FİRMA : 03-23-2005

PROJE : kolonlukirişlisistem (kolonlukirişlisistem.ST4)

GÜÇLÜ KOLON KONTROLU (tm)

Yön	Kolon	Mrc	Kiriş	Mrb	AÇIKLAMA
+X	S209(551.24)+S109(544.57)	1095.9	K107(53.54)	112.39	✓
-X	S209(551.24)+S109(544.57)	1095.9	K107(61.11)	73.47	✓
+Y	S209(559.77)+S109(556.53)	1116.3	K142(75.27)+K143(70.34)	174.72	✓
-Y	S209(559.77)+S109(556.53)	1116.3	K142(70.34)+K143(70.72)	169.26	✓
+X	S210(269.19)+S110(287.76)	556.96	K108(47.79)	57.39	✓
-X	S210(269.19)+S210(287.76)	556.96	K108(89.06)	106.97	✓
+Y	S210(496.38)+S110(505.14)	1001.53	K126(54.1)	64.91	✓
-Y	S210(496.38)+S110(505.14)	1001.53	K126(102.57)	123.09	✓
+X	S211(735.35)+S111(737.58)	1472.93	K108(103.55)	124.27	✓
-X	S211(735.35)+S111(737.58)	1472.93	K108(54.1)	64.91	✓
+Y	S211(711.22)+S111(704.75)	1415.96		0	✓
-Y	S211(711.22)+S111(704.75)	1415.96		0	✓
+X	S212(779.2)+S112(781.97)	1561.17	K111(54.1)	64.91	✓
-X	S212(779.2)+S112(781.97)	1561.17	K111(103.55)	124.27	✓
+Y	S212(739.2)+S112(733.27)	1472.47		0	✓
-Y	S212(739.2)+S112(733.27)	1472.47		0	✓
+X	S213(268)+S113(286.47)	554.47	K111(89.06)	106.92	✓
-X	S213(268)+S113(286.47)	554.47	K111(47.79)	57.44	✓
+Y	S213(495.72)+S113(504.48)	1000.2	K149(54.1)	64.91	✓
-Y	S213(495.72)+S113(504.48)	1000.2	K149(102.57)	123.09	✓
+X	S214(137.72)+S114(130.65)	268.38	K112(47.79)	57.35	✓
-X	S214(137.72)+S114(130.65)	268.38	K112(60.73)	72.88	✓
+Y	S214(163.1)+S114(178.18)	341.29	K134(9.16)	11	✓
-Y	S214(163.1)+S114(178.18)	341.29	K124(7.13)	8.55	✓
+X	S215(137.7)+S115(130.63)	268.34	K112(60.73)	72.88	✓
-X	S215(137.7)+S115(130.63)	268.34	K112(47.79)	57.35	✓
+Y	S215(163.08)+S115(178.18)	341.26	K140(9.16)	11	✓
-Y	S215(163.08)+S115(178.18)	341.26	K140(7.13)	8.55	✓
+X	S216(136.46)+S116(128.91)	265.38	K113(54.1)	64.92	✓
-X	S216(136.46)+S116(128.91)	265.38	K113(60.73)	72.88	✓
+Y	S216(161.46)+S116(158.24)	319.7	K134(7.13)	8.55	✓
-Y	S216(161.46)+S116(158.24)	319.7	K134(9.16)	11	✓
+X	S217(136.45)+S117(128.91)	265.36	K113(60.73)	72.88	✓
-X	S217(136.45)+S117(128.91)	265.36	K113(54.1)	64.92	✓
+Y	S217(161.46)+S117(158.25)	319.71	K140(7.13)	8.55	✓
-Y	S217(161.46)+S117(158.25)	319.71	K140(9.16)	11	✓
+X	S218(745.15)+S118(735.07)	1480.21	K114(46.3)	55.65	✓
-X	S218(745.15)+S118(735.07)	1480.21	K114(70.34)	84.46	✓
+Y	S218(828.64)+S118(828.22)	1656.86	K132(102.57)	123.09	✓
-Y	S218(828.64)+S118(828.22)	1656.86	K132(61.11)	73.34	✓
+X	S219(744.97)+S119(734.88)	1479.85	K114(70.34)	84.5	✓
-X	S219(744.97)+S119(734.88)	1479.85	K114(46.3)	55.61	✓
+Y	S219(828.64)+S119(828.22)	1656.86	K142(102.57)	123.09	✓
-Y	S219(828.64)+S119(828.22)	1656.86	K142(61.11)	73.34	✓
+X	S220(422.91)+S120(399.85)	822.75	K115(61.11)	73.51	✓
-X	S220(422.91)+S120(399.85)	822.75	K115(117.97)	141.74	✓
+Y	S220(756.01)+S120(753.85)	1511.86	K125(80.15)+K126(102.57)	219.27	✓
-Y	S220(756.01)+S120(753.85)	1511.86	K125(102.57)+K126(80.15)	219.27	✓
+X	S221(921.63)+S121(920.2)	1841.83	K115(117.97)+K116(70.72)	226.51	✓
-X	S221(921.63)+S121(920.2)	1841.83	K115(61.11)+K116(117.97)	215	✓
+Y	S221(803.72)+S121(781.74)	1585.46	K120(89.42)	107.31	✓
-Y	S221(803.72)+S121(781.74)	1585.46	K120(103.55)	124.27	✓
+X	S222(886.42)+S122(876.1)	1762.52	K116(41.01)+K117(46.2)	104.72	✓
-X	S222(886.42)+S122(876.1)	1762.52	K116(46.2)+K117(53.31)	119.5	✓
+Y	S222(855.03)+S122(841.37)	1696.4	K127(80.15)	96.18	✓
-Y	S222(855.03)+S122(841.37)	1696.4	K127(93.54)	112.25	✓
+X	S223(921.63)+S123(920.19)	1841.82	K117(107.11)+K118(61.11)	201.96	✓
-X	S223(921.63)+S123(920.19)	1841.82	K117(70.72)+K118(117.97)	226.53	✓
+Y	S223(803.53)+S123(781.53)	1585.06	K145(89.42)	107.31	✓
-Y	S223(803.53)+S123(781.53)	1585.06	K145(103.55)	124.27	✓
+X	S224(406.13)+S124(383.85)	789.98	K118(117.97)	141.74	✓
-X	S224(406.13)+S124(383.85)	789.98	K118(61.11)	73.51	✓
+Y	S224(787.92)+S124(783.68)	1571.6	K148(80.15)+K149(102.57)	219.27	✓
-Y	S224(787.92)+S124(783.68)	1571.6	K148(102.57)+K149(80.15)	219.27	✓
+X	S225(406.91)+S125(386.77)	793.69	K119(61.11)	73.42	✓
-X	S225(406.91)+S125(386.77)	793.69	K119(93.54)	112.33	✓
+Y	S225(527.21)+S125(511.24)	1038.45	K125(93.54)	112.25	✓
-Y	S225(527.21)+S125(511.24)	1038.45	K125(80.15)	96.18	✓
+X	S226(735.16)+S126(721.95)	1457.11	K119(102.57)	123.26	✓
-X	S226(735.16)+S126(721.95)	1457.11	K119(70.72)	85.03	✓
+Y	S226(701.11)+S126(689.11)	1390.22	K129(80.15)+K130(103.55)	220.45	✓
-Y	S226(701.11)+S126(689.11)	1390.22	K129(103.55)+K130(80.15)	220.45	✓

FİRMA : 03-23-2005

PROJE : kolonlukirişlisistem (kolonlukirişlisistem.ST4)

GÜÇLÜ KOLON KONTROLU (tm)

Yön	Kolon	Mrc	Kiriş	Mrb	AÇIKLAMA
+X	S227(890.99)+S127(880.59)	1771.58		.17	✓
-X	S227(890.99)+S127(880.59)	1771.58		.17	✓
+Y	S227(920.91)+S127(785.08)	1705.99	K136(80.15)+K137(102.57)	219.27	✓
-Y	S227(920.91)+S127(785.08)	1705.99	K136(102.57)+K137(80.15)	219.27	✓
+X	S228(735.08)+S128(721.86)	1456.93	K120(70.72)	85.03	✓
-X	S228(735.08)+S128(721.86)	1456.93	K120(102.57)	123.26	✓
+Y	S228(701.06)+S128(689.04)	1390.1	K144(80.15)+K145(102.55)	220.45	✓
-Y	S228(701.06)+S128(689.04)	1390.1	K144(102.55)+K145(80.15)	220.45	✓
+X	S229(406.5)+S129(386.33)	792.83	K120(93.54)	112.34	✓
-X	S229(406.5)+S129(386.33)	792.83	K120(61.11)	73.41	✓
+Y	S229(527.06)+S129(511.08)	1038.14	K148(93.54)	112.25	✓
-Y	S229(527.06)+S129(511.08)	1038.14	K148(80.15)	96.18	✓
+X	S230(265.36)+S130(298.33)	563.69	K121(70.94)	85.2	✓
-X	S230(265.36)+S130(298.33)	563.69	K121(74.61)	89.58	✓
+Y	S230(250.52)+S130(287.63)	538.15	K127(79.78)	95.73	✓
-Y	S230(250.52)+S130(287.63)	538.15	K127(47.79)	57.34	✓
+X	S231(265.17)+S131(298.15)	563.32	K122(74.61)	89.61	✓
-X	S231(265.17)+S131(298.15)	563.32	K122(70.94)	85.17	✓
+Y	S231(250.41)+S131(287.54)	537.95	K146(79.78)	95.73	✓
-Y	S231(250.41)+S131(287.54)	537.95	K146(47.79)	57.34	✓
+X	S232(892.81)+S132(956.81)	1849.63	K121(74.61)+K123(80.15)	185.81	✓
-X	S232(892.81)+S132(956.81)	1849.63	K121(70.94)+K123(109.23)	216.28	✓
+Y	S232(737.79)+S132(892.55)	1630.34	K129(94.54)	113.45	✓
-Y	S232(737.79)+S132(892.55)	1630.34	K129(80.15)	96.18	✓
+X	S233(705.23)+S133(695.84)	1401.07	K123(109.23)+K124(89.42)	238.49	✓
-X	S233(705.23)+S133(695.84)	1401.07	K123(89.42)+K124(109.23)	238.47	✓
+Y	S233(384.35)+S133(361.63)	745.98	K136(102.57)	123.09	✓
-Y	S233(384.35)+S133(361.63)	745.98	K136(80.15)	96.18	✓
+X	S234(892.76)+S134(956.77)	1849.53	K122(70.94)+K124(109.23)	216.31	✓
-X	S234(892.76)+S134(956.77)	1849.53	K122(74.61)+K124(80.15)	185.79	✓
+Y	S234(737.72)+S134(892.45)	1630.17	K144(103.55)	124.27	✓
-Y	S234(737.72)+S134(892.45)	1630.17	K144(80.15)	96.18	✓
+X	S301(811.08)+S201(813.02)	1624.11	K201(61.11)+K205(90.52)	181.96	✓
-X	S301(811.08)+S201(813.02)	1624.11	K201(72.62)+K205(79.05)	182	✓
+Y	S301(943.62)+S201(923.6)	1867.22		0	✓
-Y	S301(943.62)+S201(923.6)	1867.22		0	✓
+X	S302(416.36)+S202(413.72)	830.08	K201(109.23)+K202(102.38)	254.03	✓
-X	S302(416.36)+S202(413.72)	830.08	K201(116.24)+K202(96.31)	255.17	✓
+Y	S302(162.53)+S202(145.09)	308.62	K233(89.42)	107.31	✓
-Y	S302(162.53)+S202(145.09)	308.62	K233(117.97)	141.57	✓
+X	S303(446.68)+S203(444.06)	892.74	K202(96.31)+K203(94.77)	229.3	✓
-X	S303(446.68)+S203(444.06)	892.74	K202(94.77)+K203(96.21)	229.3	✓
+Y	S303(330.43)+S203(310.77)	641.2		0	✓
-Y	S303(330.43)+S203(310.77)	641.2		0	✓
+X	S304(415.67)+S204(413.01)	828.68	K203(96.31)+K204(116.24)	255.14	✓
-X	S304(415.67)+S204(413.01)	828.68	K203(102.38)+K204(109.23)	254.05	✓
+Y	S304(162.99)+S204(144.46)	307.44	K243(89.42)	107.31	✓
-Y	S304(162.99)+S204(144.46)	307.44	K243(117.97)	141.57	✓
+X	S305(796.71)+S205(798.61)	1595.32	K204(72.62)+K206(79.05)	182	✓
-X	S305(796.71)+S205(798.61)	1595.32	K204(61.11)+K206(90.52)	181.96	✓
+Y	S305(899.57)+S205(879.85)	1779.42		0	✓
-Y	S305(899.57)+S205(879.85)	1779.42		0	✓
+X	S306(304.74)+S206(163.59)	468.33	K205(87)	104.4	✓
-X	S306(304.74)+S206(163.59)	468.33	K205(82.65)	99.18	✓
+Y	S306(219.94)+S206(219.56)	439.5		0	✓
-Y	S306(219.94)+S206(219.56)	439.5		0	✓
+X	S307(304.94)+S207(162.17)	467.11	K206(82.65)	99.18	✓
-X	S307(304.94)+S207(162.17)	467.11	K206(87)	104.4	✓
+Y	S307(219.04)+S207(218.65)	437.69		0	✓
-Y	S307(219.04)+S207(218.65)	437.69		0	✓
+X	S308(557.64)+S208(551.72)	1109.36	K207(89.42)	107.51	✓
-X	S308(557.64)+S208(551.72)	1109.36	K207(126.55)	152.03	✓
+Y	S308(561.89)+S208(560.06)	1121.95	K232(116.24)+K233(91.26)	249	✓
-Y	S308(561.89)+S208(560.06)	1121.95	K232(91.26)+K233(89.42)	216.82	✓
+X	S309(557.23)+S209(551.34)	1108.57	K207(126.55)	152.05	✓
-X	S309(557.23)+S209(551.34)	1108.57	K207(89.42)	107.46	✓
+Y	S309(561.58)+S209(559.77)	1121.36	K242(116.24)+K243(91.26)	249	✓
-Y	S309(561.58)+S209(559.77)	1121.36	K242(91.26)+K243(89.42)	216.82	✓
+X	S310(300.77)+S210(269.19)	569.96	K208(80.15)	96.27	✓
-X	S310(300.77)+S210(269.19)	569.96	K208(109.23)+K226(.11)	131.22	✓
+Y	S310(506.61)+S210(496.38)	1002.99	K226(89.42)	107.31	✓
-Y	S310(506.61)+S210(496.38)	1002.99	K226(141.56)	169.87	✓

ST4-CAD V11

FİRMA :

03-23-2005

PROJE : kolonlukirişlisistem (kolonlukirişlisistem.ST4)

KUŞATILMIŞ KOLON KONTROLU
TDY 1997 göre yapılmıştır.
Ve=1.25 fyk (Asl+Asz)-Vkol<Vmax=(0.60÷0.45) bj hc fcd

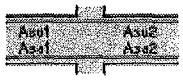

Kolon		Hx/Hy	bw1	bw2	bj	Asu1	Asz1	Asu2	Asz2	Ast	Vkol	Ve	Vmax	AÇIKLAMA
S4001	x	120	147.5	27.5	50.0	15.6	0.0	15.6	0.0	15.6	0.0	81.8 <	540.0	Kuşatılmamış
S4001	y	175	0.0	0.0	0.0	0.0	0.0	0.0	0.0	0.0	0.0	0.0 <	0.0	✓
S3001	x	120	147.5	27.5	50.0	17.1	0.0	17.1	0.0	17.1	21.9	68.0 <	540.0	Kuşatılmamış
S3001	y	175	0.0	0.0	0.0	0.0	0.0	0.0	0.0	0.0	1.0	-1.4 <	0.0	✓
S2001	x	120	147.5	27.5	55.0	25.0	0.0	25.0	0.0	25.0	32.0	99.3 <	594.0	Kuşatılmamış
S2001	y	175	0.0	0.0	0.0	0.0	0.0	0.0	0.0	0.0	1.2	-1.2 <	0.0	✓
S1001	x	120	147.5	27.5	55.0	29.7	0.0	29.7	0.0	29.7	43.3	112.6 <	594.0	Kuşatılmamış
S1001	y	175	0.0	0.0	0.0	0.0	0.0	0.0	0.0	0.0	1.7	-1.7 <	0.0	✓
S501	x	120	147.5	27.5	55.0	35.2	0.0	35.2	0.0	35.2	51.3	133.5 <	594.0	Kuşatılmamış
S501	y	175	0.0	0.0	0.0	0.0	0.0	0.0	0.0	0.0	2.2	-2.2 <	0.0	✓
S101	x	120	147.5	27.5	55.0	25.0	0.0	25.0	0.0	25.0	62.8	68.5 <	594.0	Kuşatılmamış
S101	y	175	0.0	0.0	0.0	0.0	0.0	0.0	0.0	0.0	32.1	-32.1 <	0.0	✓
S4002	x	130	55.0	25.0	50.0	15.6	12.1	15.6	12.6	28.2	0.0	147.8 <	585.0	Kuşatılmamış
S4002	y	80	65.0	65.0	130.0	15.6	0.0	15.6	0.0	15.6	0.0	81.8 <	936.0	✓
S3002	x	130	55.0	25.0	50.0	26.6	30.9	26.6	31.4	58.0	33.3	271.0 <	585.0	Kuşatılmamış
S3002	y	80	65.0	65.0	130.0	31.4	0.0	31.4	0.0	31.4	15.0	150.0 <	936.0	✓
S2002	x	130	55.0	25.0	50.0	38.3	44.0	38.3	44.0	82.3	46.1	386.1 <	585.0	Kuşatılmamış
S2002	y	80	65.0	65.0	130.0	31.4	0.0	31.4	0.0	31.4	18.4	146.5 <	936.0	✓
S1002	x	130	55.0	25.0	50.0	44.0	50.3	44.0	50.3	94.3	56.0	438.9 <	585.0	Kuşatılmamış
S1002	y	80	65.0	65.0	130.0	34.6	0.0	34.6	0.0	34.6	23.4	158.0 <	936.0	✓
S502	x	130	55.0	25.0	50.0	41.5	50.3	41.5	50.3	91.8	58.9	422.8 <	585.0	Kuşatılmamış
S502	y	80	65.0	65.0	130.0	38.3	0.0	38.3	0.0	38.3	29.5	171.7 <	936.0	✓
S102	x	130	55.0	25.0	50.0	25.0	22.0	25.0	22.0	47.0	48.7	198.0 <	585.0	Kuşatılmamış
S102	y	80	65.0	65.0	130.0	25.0	0.0	25.0	0.0	25.0	24.6	106.7 <	936.0	✓
S4003	x	110	57.5	57.5	115.0	15.6	12.6	15.6	12.6	28.2	0.0	147.8 <	1138.5	Kuşatılmamış
S4003	y	115	65.0	65.0	0.0	0.0	0.0	0.0	0.0	0.0	0.0	0.0 <	0.0	✓
S3003	x	110	57.5	57.5	115.0	26.6	25.1	26.6	25.1	51.7	48.5	222.9 <	1138.5	Kuşatılmamış
S3003	y	115	65.0	65.0	0.0	0.0	0.0	0.0	0.0	0.0	12.3	-12.3 <	0.0	✓
S2003	x	110	57.5	57.5	115.0	35.2	34.6	35.2	34.6	69.8	65.7	300.5 <	1138.5	Kuşatılmamış
S2003	y	115	65.0	65.0	0.0	0.0	0.0	0.0	0.0	0.0	14.9	-14.9 <	0.0	✓
S1003	x	110	57.5	57.5	115.0	40.8	40.8	40.8	40.8	81.7	76.6	352.3 <	1138.5	Kuşatılmamış
S1003	y	115	65.0	65.0	0.0	0.0	0.0	0.0	0.0	0.0	18.9	-18.9 <	0.0	✓
S503	x	110	57.5	57.5	115.0	41.5	40.8	41.5	40.8	82.3	75.9	356.3 <	1138.5	Kuşatılmamış
S503	y	115	65.0	65.0	0.0	0.0	0.0	0.0	0.0	0.0	23.6	-23.6 <	0.0	✓
S103	x	110	57.5	57.5	115.0	25.0	22.0	25.0	22.0	47.0	48.5	198.3 <	1138.5	Kuşatılmamış
S103	y	115	65.0	65.0	0.0	0.0	0.0	0.0	0.0	0.0	30.9	-30.9 <	0.0	✓
S4004	x	130	55.0	25.0	50.0	15.6	12.6	15.6	12.1	28.2	0.0	147.8 <	585.0	Kuşatılmamış
S4004	y	80	65.0	65.0	130.0	15.6	0.0	15.6	0.0	15.6	0.0	81.8 <	936.0	✓
S3004	x	130	55.0	25.0	50.0	26.6	31.4	26.6	30.9	58.0	33.3	271.1 <	585.0	Kuşatılmamış
S3004	y	80	65.0	65.0	130.0	25.9	0.0	28.9	0.0	28.9	14.9	136.8 <	936.0	✓
S2004	x	130	55.0	25.0	50.0	38.3	44.0	38.3	44.0	82.3	46.0	386.2 <	585.0	Kuşatılmamış
S2004	y	80	65.0	65.0	130.0	31.4	0.0	31.4	0.0	31.4	18.3	146.6 <	936.0	✓
S1004	x	130	55.0	25.0	50.0	44.0	50.3	44.0	50.3	94.3	55.9	439.0 <	585.0	Kuşatılmamış
S1004	y	80	65.0	65.0	130.0	34.6	0.0	34.6	0.0	34.6	23.4	158.1 <	936.0	✓
S504	x	130	55.0	25.0	50.0	41.5	50.3	41.5	50.3	91.8	58.9	422.8 <	585.0	Kuşatılmamış
S504	y	80	65.0	65.0	130.0	38.3	0.0	38.3	0.0	38.3	29.5	171.8 <	936.0	✓
S104	x	130	55.0	25.0	50.0	25.0	22.0	25.0	22.0	47.0	48.7	198.0 <	585.0	Kuşatılmamış
S104	y	80	65.0	65.0	130.0	25.0	0.0	25.0	0.0	25.0	24.6	106.7 <	936.0	✓
S4005	x	120	24.5	147.5	50.0	15.6	0.0	15.6	0.0	15.6	0.0	81.8 <	540.0	Kuşatılmamış
S4005	y	172	65.0	65.0	0.0	0.0	0.0	0.0	0.0	0.0	0.0	0.0 <	0.0	✓
S3005	x	120	24.5	147.5	50.0	18.7	0.0	18.7	0.0	18.7	21.9	76.4 <	540.0	Kuşatılmamış
S3005	y	172	65.0	65.0	0.0	0.0	0.0	0.0	0.0	0.0	1.2	-1.2 <	0.0	✓
S2005	x	120	24.5	147.5	50.0	25.0	0.0	25.0	0.0	25.0	31.9	99.4 <	540.0	Kuşatılmamış
S2005	y	172	65.0	65.0	0.0	0.0	0.0	0.0	0.0	0.0	1.2	-1.2 <	0.0	✓
S1005	x	120	24.5	147.5	50.0	29.7	0.0	29.7	0.0	29.7	42.3	112.6 <	540.0	Kuşatılmamış
S1005	y	172	65.0	65.0	0.0	0.0	0.0	0.0	0.0	0.0	1.7	-1.7 <	0.0	✓

STAA-CAD V11

FİRMA :

03-23-2005

PROJE : kolonlukirişlisistem

(kolonlukirişlisistem.ST4)

KUŞATILMIS KOLON KONTROLU

Kolon		Bx/By	bw1	bw2	bj	Asu1	Asa1	Asu2	Asa2	Asc	Vkol	Ve	Vmax	AÇIKLAMA
S505	x	120	24.5	147.5	50.0	35.2	0.0	35.2	0.0	35.2	51.2	133.5 <	540.0	Kuşatilmamiş
S505	y	172	65.0	65.0	0.0	0.0	0.0	0.0	0.0	0.0	3.1	-3.1 <	0.0	✓
S105	x	120	24.5	147.5	50.0	25.0	0.0	25.0	0.0	25.0	62.5	68.9 <	540.0	Kuşatilmamiş
S105	y	172	65.0	65.0	0.0	0.0	0.0	0.0	0.0	0.0	30.4	-30.4 <	0.0	✓
S4006	x	110	70.0	25.0	50.0	15.6	0.0	15.6	0.0	15.6	0.0	81.8 <	495.0	Kuşatilmamiş
S4006	y	95	65.0	65.0	0.0	0.0	0.0	0.0	0.0	0.0	0.0	0.0 <	0.0	✓
S3006	x	110	70.0	25.0	50.0	15.6	0.0	15.6	0.0	15.6	12.6	69.3 <	495.0	Kuşatilmamiş
S3006	y	95	65.0	65.0	0.0	0.0	0.0	0.0	0.0	0.0	11.5	-11.5 <	0.0	✓
S2006	x	110	70.0	25.0	50.0	15.6	0.0	15.6	0.0	15.6	18.8	63.1 <	495.0	Kuşatilmamiş
S2006	y	95	65.0	65.0	0.0	0.0	0.0	0.0	0.0	0.0	15.1	-15.1 <	0.0	✓
S1006	x	110	70.0	25.0	50.0	23.4	0.0	23.4	0.0	23.4	26.3	96.6 <	495.0	Kuşatilmamiş
S1006	y	95	65.0	65.0	0.0	0.0	0.0	0.0	0.0	0.0	19.2	-19.2 <	0.0	✓
S506	x	110	70.0	25.0	50.0	28.9	0.0	28.9	0.0	28.9	31.8	119.9 <	495.0	Kuşatilmamiş
S506	y	95	65.0	65.0	0.0	0.0	0.0	0.0	0.0	0.0	22.3	-22.3 <	0.0	✓
S106	x	110	70.0	25.0	50.0	21.9	0.0	21.9	0.0	21.9	34.7	80.1 <	495.0	Kuşatilmamiş
S106	y	95	25.0	85.0	50.0	25.0	0.0	25.0	0.0	25.0	23.4	107.9 <	427.5	✓
S4007	x	110	25.0	70.0	50.0	15.6	0.0	15.6	0.0	15.6	0.0	81.8 <	495.0	Kuşatilmamiş
S4007	y	95	25.0	85.0	0.0	0.0	0.0	0.0	0.0	0.0	0.0	0.0 <	0.0	✓
S3007	x	110	25.0	70.0	50.0	15.6	0.0	15.6	0.0	15.6	12.6	69.2 <	495.0	Kuşatilmamiş
S3007	y	95	25.0	85.0	0.0	0.0	0.0	0.0	0.0	0.0	11.4	-11.4 <	0.0	✓
S2007	x	110	25.0	70.0	50.0	15.6	0.0	15.6	0.0	15.6	18.8	63.0 <	495.0	Kuşatilmamiş
S2007	y	95	25.0	85.0	0.0	0.0	0.0	0.0	0.0	0.0	15.0	-15.0 <	0.0	✓
S1007	x	110	25.0	70.0	50.0	23.4	0.0	23.4	0.0	23.4	26.3	96.6 <	495.0	Kuşatilmamiş
S1007	y	95	25.0	85.0	0.0	0.0	0.0	0.0	0.0	0.0	19.2	-19.2 <	0.0	✓
S507	x	110	25.0	70.0	50.0	28.9	0.0	28.9	0.0	28.9	31.8	119.9 <	495.0	Kuşatilmamiş
S507	y	95	25.0	85.0	0.0	0.0	0.0	0.0	0.0	0.0	22.2	-22.2 <	0.0	✓
S107	x	110	25.0	70.0	50.0	21.9	0.0	21.9	0.0	21.9	34.7	80.1 <	495.0	Kuşatilmamiş
S107	y	95	85.0	25.0	50.0	25.0	0.0	25.0	0.0	25.0	23.4	107.9 <	427.5	✓
S4008	x	120	60.0	60.0	120.0	15.6	0.0	15.6	0.0	15.6	0.0	81.8 <	1296.0	Kuşatilmamiş
S4008	y	120	60.0	60.0	120.0	25.0	12.6	25.0	15.7	40.7	0.0	213.8 <	1296.0	✓
S3008	x	120	60.0	60.0	120.0	32.8	0.0	32.8	0.0	32.8	29.1	143.3 <	1296.0	Kuşatilmamiş
S3008	y	120	60.0	60.0	120.0	44.0	31.4	44.0	40.8	84.8	53.3	392.1 <	1296.0	✓
S2008	x	120	60.0	60.0	120.0	41.5	0.0	41.5	0.0	41.5	38.9	178.8 <	1296.0	Kuşatilmamiş
S2008	y	120	60.0	60.0	120.0	47.1	31.4	47.1	50.3	97.4	63.6	447.8 <	1296.0	✓
S1008	x	120	60.0	60.0	120.0	50.3	0.0	50.3	0.0	50.3	45.2	218.7 <	1296.0	Kuşatilmamiş
S1008	y	120	60.0	60.0	120.0	47.1	31.4	47.1	53.4	100.5	70.9	456.9 <	1296.0	✓
S508	x	120	60.0	60.0	120.0	47.1	0.0	47.1	0.0	47.1	45.4	202.1 <	1296.0	Kuşatilmamiş
S508	y	120	60.0	60.0	120.0	41.5	34.6	41.5	50.3	91.8	75.4	406.3 <	1296.0	✓
S108	x	120	60.0	60.0	120.0	29.7	0.0	29.7	0.0	29.7	41.5	114.4 <	1296.0	Kuşatilmamiş
S108	y	120	60.0	60.0	120.0	21.9	22.0	21.9	23.5	45.4	49.9	188.3 <	1296.0	✓
S4009	x	120	60.0	60.0	120.0	15.6	0.0	15.6	0.0	15.6	0.0	81.8 <	1296.0	Kuşatilmamiş
S4009	y	120	60.0	60.0	120.0	25.0	12.6	25.0	15.7	40.7	0.0	213.8 <	1296.0	✓
S3009	x	120	60.0	60.0	120.0	32.8	0.0	32.8	0.0	32.8	29.1	143.3 <	1296.0	Kuşatilmamiş
S3009	y	120	60.0	60.0	120.0	41.5	31.4	41.5	40.8	82.2	53.2	379.0 <	1296.0	✓
S2009	x	120	60.0	60.0	120.0	41.5	0.0	41.5	0.0	41.5	38.9	178.8 <	1296.0	Kuşatilmamiş
S2009	y	120	60.0	60.0	120.0	47.1	31.4	47.1	50.3	97.4	63.5	447.9 <	1296.0	✓
S1009	x	120	60.0	60.0	120.0	50.3	0.0	50.3	0.0	50.3	45.2	218.7 <	1296.0	Kuşatilmamiş
S1009	y	120	60.0	60.0	120.0	47.1	31.4	47.1	53.4	100.5	70.9	457.0 <	1296.0	✓
S509	x	120	60.0	60.0	120.0	47.1	0.0	47.1	0.0	47.1	45.4	202.1 <	1296.0	Kuşatilmamiş
S509	y	120	60.0	60.0	120.0	41.5	34.6	41.5	50.3	91.8	75.4	406.3 <	1296.0	✓
S109	x	120	60.0	60.0	120.0	29.7	0.0	29.7	0.0	29.7	41.5	114.4 <	1296.0	Kuşatilmamiş
S109	y	120	60.0	60.0	120.0	21.9	22.0	21.9	23.5	45.4	49.9	188.3 <	1296.0	✓
S4010	x	120	95.0	25.0	50.0	15.6	0.0	15.6	0.0	15.6	0.0	81.8 <	540.0	Kuşatilmamiş
S4010	y	120	25.0	95.0	50.0	29.7	0.0	29.7	0.0	29.7	0.0	155.9 <	540.0	✓
S3010	x	120	95.0	25.0	50.0	18.7	0.0	18.7	0.0	18.7	15.3	83.0 <	540.0	Kuşatilmamiş
S3010	y	120	25.0	95.0	50.0	53.4	0.0	53.4	0.0	53.4	38.9	249.6 <	540.0	✓
S2010	x	120	95.0	25.0	50.0	26.6	0.0	26.6	0.0	26.6	22.0	117.3 <	540.0	Kuşatilmamiş
S2010	y	120	25.0	95.0	50.0	62.8	0.0	62.8	0.0	62.8	37.3	292.6 <	540.0	✓

STAA-CAD V11

FİRMA : 03-23-2005

PROJE : kolonlukirişlisistem (kolonlukirişlisistem.ST4)

KUŞATILMIS KOLON KONTROLU

Kolon		Bx/By	bw1	bw2	hj	Asu1	Asa1	Asu2	Asa2	Asc	Vkol	Ve	Vmax	AÇIKLAMA
S1010	x	120	95.0	25.0	50.0	35.2	0.0	35.2	0.0	35.2	28.1	156.7 <	540.0	Kuşatilmamiş
S1010	y	120	25.0	95.0	50.0	62.8	0.0	62.8	0.0	62.8	40.1	289.8 <	540.0	✓
S510	x	120	95.0	25.0	50.0	38.3	0.0	38.3	0.0	38.3	30.5	170.8 <	540.0	Kuşatilmamiş
S510	y	120	25.0	95.0	50.0	59.7	0.0	59.7	0.0	59.7	38.5	274.9 <	540.0	✓
S110	x	120	95.0	25.0	50.0	28.2	0.0	28.2	0.0	28.2	35.4	112.4 <	540.0	Kuşatilmamiş
S110	y	120	25.0	95.0	50.0	32.8	0.0	32.8	0.0	32.8	32.3	140.1 <	540.0	✓
S4011	x	130	65.0	65.0	130.0	15.6	12.6	15.6	8.0	28.2	0.0	147.8 <	1521.0	Kuşatilmamiş
S4011	y	130	25.0	95.0	0.0	0.0	0.0	0.0	0.0	0.0	0.0	0.0 <	0.0	✓
S3011	x	130	65.0	65.0	130.0	25.0	12.6	25.0	12.6	37.6	31.8	165.5 <	1521.0	Kuşatilmamiş
S3011	y	130	25.0	95.0	0.0	0.0	0.0	0.0	0.0	0.0	15.6	-15.6 <	0.0	✓
S2011	x	130	65.0	65.0	130.0	35.2	18.9	35.2	18.9	54.0	44.6	239.1 <	1521.0	Kuşatilmamiş
S2011	y	130	25.0	95.0	0.0	0.0	0.0	0.0	0.0	0.0	18.4	-18.4 <	0.0	✓
S1011	x	130	65.0	65.0	130.0	44.0	0.0	44.0	0.0	44.0	56.5	174.4 <	1521.0	Kuşatilmamiş
S1011	y	130	25.0	95.0	0.0	0.0	0.0	0.0	0.0	0.0	19.4	-19.4 <	0.0	✓
S511	x	130	65.0	65.0	130.0	47.1	0.0	47.1	0.0	47.1	62.7	184.8 <	1521.0	Kuşatilmamiş
S511	y	130	25.0	95.0	0.0	0.0	0.0	0.0	0.0	0.0	19.0	-19.0 <	0.0	✓
S111	x	130	65.0	65.0	130.0	33.2	0.0	33.2	0.0	33.2	60.2	114.0 <	1521.0	Kuşatilmamiş
S111	y	130	25.0	95.0	0.0	0.0	0.0	0.0	0.0	0.0	21.5	-21.5 <	0.0	✓
S4012	x	135	65.0	65.0	130.0	15.6	12.6	15.6	12.6	28.2	0.0	147.8 <	1579.5	Kuşatilmamiş
S4012	y	130	25.0	95.0	0.0	0.0	0.0	0.0	0.0	0.0	0.0	0.0 <	0.0	✓
S3012	x	135	65.0	65.0	130.0	25.0	12.6	25.0	12.6	37.6	31.8	165.5 <	1579.5	Kuşatilmamiş
S3012	y	130	25.0	95.0	0.0	0.0	0.0	0.0	0.0	0.0	15.6	-15.6 <	0.0	✓
S2012	x	135	65.0	65.0	130.0	35.2	18.9	35.2	18.9	54.0	44.7	239.1 <	1579.5	Kuşatilmamiş
S2012	y	130	25.0	95.0	0.0	0.0	0.0	0.0	0.0	0.0	18.4	-18.4 <	0.0	✓
S1012	x	135	65.0	65.0	130.0	12.6	0.0	12.6	0.0	12.6	56.6	9.4 <	1579.5	Kuşatilmamiş
S1012	y	130	25.0	95.0	0.0	0.0	0.0	0.0	0.0	0.0	19.4	-19.4 <	0.0	✓
S512	x	135	65.0	65.0	130.0	12.6	0.0	12.6	0.0	12.6	62.7	3.3 <	1579.5	Kuşatilmamiş
S512	y	130	25.0	95.0	0.0	0.0	0.0	0.0	0.0	0.0	19.0	-19.0 <	0.0	✓
S112	x	135	65.0	65.0	130.0	8.0	0.0	8.0	0.0	8.0	60.2	-18.0 <	1579.5	Kuşatilmamiş
S112	y	130	25.0	95.0	0.0	0.0	0.0	0.0	0.0	0.0	21.5	-21.5 <	0.0	✓
S4013	x	120	25.0	95.0	50.0	15.6	0.0	15.6	0.0	15.6	0.0	81.8 <	540.0	Kuşatilmamiş
S4013	y	120	95.0	25.0	50.0	29.7	0.0	29.7	0.0	29.7	0.0	155.9 <	540.0	✓
S3013	x	120	25.0	95.0	50.0	18.7	0.0	18.7	0.0	18.7	15.3	88.0 <	540.0	Kuşatilmamiş
S3013	y	120	95.0	25.0	50.0	52.4	0.0	52.4	0.0	52.4	30.8	249.6 <	540.0	✓
S2013	x	120	25.0	95.0	50.0	26.6	0.0	26.6	0.0	26.6	22.1	117.2 <	540.0	Kuşatilmamiş
S2013	y	120	95.0	25.0	50.0	62.8	0.0	62.8	0.0	62.8	37.2	292.7 <	540.0	✓
S1013	x	120	25.0	95.0	50.0	35.2	0.0	35.2	0.0	35.2	28.1	156.7 <	540.0	Kuşatilmamiş
S1013	y	120	95.0	25.0	50.0	62.8	0.0	62.8	0.0	62.8	40.0	289.9 <	540.0	✓
S513	x	120	25.0	95.0	50.0	38.3	0.0	38.3	0.0	38.3	30.5	170.8 <	540.0	Kuşatilmamiş
S513	y	120	95.0	25.0	50.0	59.7	0.0	59.7	0.0	59.7	38.5	274.9 <	540.0	✓
S113	x	120	25.0	95.0	50.0	28.2	0.0	28.2	0.0	28.2	35.4	112.4 <	540.0	Kuşatilmamiş
S113	y	120	95.0	25.0	50.0	32.8	0.0	32.8	0.0	32.8	32.4	140.0 <	540.0	✓
S4014	x	80	40.0	40.0	80.0	15.6	0.0	15.6	0.0	15.6	0.0	81.8 <	576.0	Kuşatilmamiş
S4014	y	80	40.0	40.0	80.0	6.2	0.0	6.2	0.0	6.2	0.0	32.3 <	576.0	✓
S3014	x	80	40.0	40.0	80.0	15.6	0.0	15.6	0.0	15.6	1.2	80.6 <	576.0	Kuşatilmamiş
S3014	y	80	40.0	40.0	80.0	6.2	0.0	6.2	0.0	6.2	0.1	32.2 <	576.0	✓
S2014	x	80	40.0	40.0	80.0	15.6	0.0	15.6	0.0	15.6	2.5	79.4 <	576.0	Kuşatilmamiş
S2014	y	80	40.0	40.0	80.0	6.2	0.0	6.2	0.0	6.2	0.2	32.1 <	576.0	✓
S1014	x	80	40.0	40.0	80.0	15.6	0.0	15.6	0.0	15.6	7.4	74.4 <	576.0	Kuşatilmamiş
S1014	y	80	40.0	40.0	80.0	6.2	0.0	6.2	0.0	6.2	1.1	31.3 <	576.0	✓
S514	x	80	40.0	40.0	80.0	18.7	0.0	18.7	0.0	18.7	14.8	83.5 <	576.0	Kuşatilmamiş
S514	y	80	40.0	40.0	80.0	7.7	0.0	7.7	0.0	7.7	2.3	38.1 <	576.0	✓
S114	x	80	40.0	40.0	80.0	18.7	0.0	18.7	0.0	18.7	17.0	81.3 <	576.0	Kuşatilmamiş
S114	y	80	40.0	40.0	80.0	6.2	0.0	6.2	0.0	6.2	4.7	27.7 <	576.0	✓
S4015	x	80	40.0	40.0	80.0	15.6	0.0	15.6	0.0	15.6	0.0	81.8 <	576.0	Kuşatilmamiş
S4015	y	80	40.0	40.0	80.0	6.2	0.0	6.2	0.0	6.2	0.0	32.3 <	576.0	✓
S3015	x	80	40.0	40.0	80.0	15.6	0.0	15.6	0.0	15.6	1.2	80.6 <	576.0	Kuşatilmamiş
S3015	y	80	40.0	40.0	80.0	6.2	0.0	6.2	0.0	6.2	0.1	32.2 <	576.0	✓

ST4-CAD V11

FİRMA :

03-23-2005

PROJE : kolonlukirişlisistem (kolonlukirişlisistem.ST4)

KUŞATILMIS KOLON KONTROLU

Kolon		Bx/By	bw1	bw2	bj	Asu1	Asa1	Asu2	Asa2	Ast	Vkol	Ve	Vmax	AÇIKLAMA
S2015	x	80	40.0	40.0	80.0	15.6	0.0	15.6	0.0	15.6	2.5	79.4 <	576.0	Kuşatilmamiş
S2015	y	80	40.0	40.0	80.0	6.2	0.0	6.2	0.0	6.2	0.2	32.1 <	576.0	✓
S1015	x	80	40.0	40.0	80.0	15.6	0.0	15.6	0.0	15.6	7.4	74.4 <	576.0	Kuşatilmamiş
S1015	y	80	40.0	40.0	80.0	6.2	0.0	6.2	0.0	6.2	1.1	31.3 <	576.0	✓
S515	x	80	40.0	40.0	80.0	18.7	0.0	18.7	0.0	18.7	14.8	83.5 <	576.0	Kuşatilmamiş
S515	y	80	40.0	40.0	80.0	7.7	0.0	7.7	0.0	7.7	2.3	38.1 <	576.0	✓
S115	x	80	40.0	40.0	80.0	18.7	0.0	18.7	0.0	18.7	17.0	81.3 <	576.0	Kuşatýlmamýş
S115	y	80	40.0	40.0	80.0	6.2	0.0	6.2	0.0	6.2	4.7	27.7 <	576.0	✓
S4016	x	80	40.0	40.0	80.0	15.6	0.0	15.6	0.0	15.6	0.0	81.8 <	576.0	Kuşatilmamiş
S4016	y	80	40.0	40.0	80.0	6.2	0.0	6.2	0.0	6.2	0.0	32.3 <	576.0	✓
S3016	x	80	40.0	40.0	80.0	15.6	0.0	15.6	0.0	15.6	1.9	79.9 <	576.0	Kuşatilmamiş
S3016	y	80	40.0	40.0	80.0	6.2	0.0	6.2	0.0	6.2	0.1	32.2 <	576.0	✓
S2016	x	80	40.0	40.0	80.0	15.6	0.0	15.6	0.0	15.6	3.3	78.5 <	576.0	Kuşatilmamiş
S2016	y	80	40.0	40.0	80.0	6.2	0.0	6.2	0.0	6.2	0.2	32.1 <	576.0	✓
S1016	x	80	40.0	40.0	80.0	15.6	0.0	15.6	0.0	15.6	9.0	72.8 <	576.0	Kuşatilmamiş
S1016	y	80	40.0	40.0	80.0	6.2	0.0	6.2	0.0	6.2	1.1	31.3 <	576.0	✓
S516	x	80	40.0	40.0	80.0	18.7	0.0	18.7	0.0	18.7	17.5	80.8 <	576.0	Kuşatilmamiş
S516	y	80	40.0	40.0	80.0	7.7	0.0	7.7	0.0	7.7	2.3	38.1 <	576.0	✓
S116	x	80	40.0	40.0	80.0	18.7	0.0	18.7	0.0	18.7	18.5	79.8 <	576.0	Kuşatilmamiş
S116	y	80	40.0	40.0	80.0	6.2	0.0	6.2	0.0	6.2	4.7	27.7 <	576.0	✓
S4017	x	80	40.0	40.0	80.0	15.6	0.0	15.6	0.0	15.6	0.0	81.8 <	576.0	Kuşatilmamiş
S4017	y	80	40.0	40.0	80.0	6.2	0.0	6.2	0.0	6.2	0.0	32.3 <	576.0	✓
S3017	x	80	40.0	40.0	80.0	15.6	0.0	15.6	0.0	15.6	1.9	79.9 <	576.0	Kuşatilmamiş
S3017	y	80	40.0	40.0	80.0	6.2	0.0	6.2	0.0	6.2	0.1	32.2 <	576.0	✓
S2017	x	80	40.0	40.0	80.0	15.6	0.0	15.6	0.0	15.6	3.3	78.5 <	576.0	Kuşatilmamiş
S2017	y	80	40.0	40.0	80.0	6.2	0.0	6.2	0.0	6.2	0.2	32.1 <	576.0	✓
S1017	x	80	40.0	40.0	80.0	15.6	0.0	15.6	0.0	15.6	9.0	72.8 <	576.0	Kuşatilmamiş
S1017	y	80	40.0	40.0	80.0	6.2	0.0	6.2	0.0	6.2	1.1	31.3 <	576.0	✓
S517	x	80	40.0	40.0	80.0	18.7	0.0	18.7	0.0	18.7	17.5	80.8 <	576.0	Kuşatilmamiş
S517	y	80	40.0	40.0	80.0	7.7	0.0	7.7	0.0	7.7	2.3	38.1 <	576.0	✓
S117	x	80	40.0	40.0	80.0	18.7	0.0	18.7	0.0	18.7	18.5	79.8 <	576.0	Kuşatilmamiş
S117	y	80	40.0	40.0	80.0	6.2	0.0	6.2	0.0	6.2	4.7	27.7 <	576.0	✓
S4018	x	135	67.5	67.5	135.0	15.6	0.0	15.6	0.0	15.6	0.0	81.8 <	1640.3	Kuşatilmamiş
S4018	y	135	67.5	67.5	135.0	7.7	0.0	7.7	0.0	7.7	0.0	40.4 <	1640.3	✓
S3018	x	135	67.5	67.5	135.0	25.0	0.0	25.0	0.0	25.0	35.1	96.2 <	1640.3	Kuşatilmamiş
S3018	y	135	67.5	67.5	135.0	15.7	0.0	15.7	0.0	15.7	78.4	4.1 <	1640.3	✓
S2018	x	135	67.5	67.5	135.0	32.8	0.0	32.8	0.0	32.8	44.6	127.8 <	1640.3	Kuşatilmamiş
S2018	y	135	67.5	67.5	135.0	15.7	0.0	15.7	0.0	15.7	92.9	-10.4 <	1640.3	✓
S1018	x	135	67.5	67.5	135.0	35.2	0.0	35.2	0.0	35.2	50.1	134.7 <	1640.3	Kuşatilmamiş
S1018	y	135	67.5	67.5	135.0	15.7	0.0	15.7	0.0	15.7	95.2	-12.7 <	1640.3	✓
S518	x	135	67.5	67.5	135.0	35.2	0.0	35.2	0.0	35.2	50.3	134.5 <	1640.3	Kuşatilmamiş
S518	y	135	67.5	67.5	135.0	15.7	0.0	15.7	0.0	15.7	86.7	-4.3 <	1640.3	✓
S118	x	135	67.5	67.5	135.0	21.9	0.0	21.9	0.0	21.9	51.6	63.2 <	1640.3	Kuşatilmamiş
S118	y	135	67.5	67.5	135.0	7.7	0.0	7.7	0.0	7.7	58.4	-18.0 <	1640.3	✓
S4019	x	135	67.5	67.5	135.0	15.6	0.0	15.6	0.0	15.6	0.0	81.8 <	1640.3	Kuşatilmamiş
S4019	y	135	67.5	67.5	135.0	7.7	0.0	7.7	0.0	7.7	0.0	40.4 <	1640.2	✓
S3019	x	135	67.5	67.5	135.0	25.0	0.0	25.0	0.0	25.0	35.1	96.2 <	1640.3	Kuşatilmamiş
S3019	y	135	67.5	67.5	135.0	15.7	0.0	15.7	0.0	15.7	78.3	4.2 <	1640.2	✓
S2019	x	135	67.5	67.5	135.0	32.8	0.0	32.8	0.0	32.8	44.6	127.8 <	1640.3	Kuşatilmamiş
S2019	y	135	67.5	67.5	135.0	15.7	0.0	15.7	0.0	15.7	92.9	-10.3 <	1640.2	✓
S1019	x	135	67.5	67.5	135.0	35.2	0.0	35.2	0.0	35.2	50.1	134.7 <	1640.3	Kuşatilmamiş
S1019	y	135	67.5	67.5	135.0	15.7	0.0	15.7	0.0	15.7	95.1	-12.6 <	1640.2	✓
S519	x	135	67.5	67.5	135.0	35.2	0.0	35.2	0.0	35.2	50.3	134.5 <	1640.3	Kuşatilmamiş
S519	y	135	67.5	67.5	135.0	15.7	0.0	15.7	0.0	15.7	86.7	-4.2 <	1640.2	✓
S119	x	135	67.5	67.5	135.0	21.9	0.0	21.9	0.0	21.9	51.6	63.2 <	1640.3	Kuşatilmamiş
S119	y	135	67.5	67.5	135.0	7.7	0.0	7.7	0.0	7.7	58.4	-18.0 <	1640.2	✓
S4020	x	135	65.0	65.0	130.0	18.7	0.0	18.7	0.0	18.7	0.0	98.3 <	1579.5	Kuşatilmamiş
S4020	y	130	110.0	25.0	50.0	23.4	14.1	23.4	13.6	37.5	0.0	197.0 <	585.0	✓

STAA-CAD V11

FİRMA : | 03-23-2009

PROJE : kolonlukirişlisistem (kolonlukirişlisistem.ST4)

KUŞATILMIS KOLON KONTROLU

Kolon		Bx/By	bw1	bw2	hj	Asu1	Asa1	Asu2	Asa2	Asc	Vkol	Ve		Vmax	AÇIKLAMA
S3020	x	135	65.0	65.0	120.0	33.2	0.0	33.2	0.0	33.2	20.4	153.8	<	1579.5	Kuşatilmamiş
S3020	y	120	110.0	25.0	50.0	44.0	34.6	44.0	34.6	78.6	40.9	371.5	<	585.0	✓
S2020	x	135	65.0	65.0	130.0	44.0	0.0	44.0	0.0	44.0	25.1	201.9	<	1579.5	Kuşatilmamiş
S2020	y	130	110.0	25.0	50.0	53.4	40.8	53.4	40.8	94.3	51.4	443.5	<	585.0	✓
S1020	x	135	65.0	65.0	120.0	53.4	0.0	53.4	0.0	53.4	37.3	243.1	<	1579.5	Kuşatilmamiş
S1020	y	130	110.0	25.0	50.0	59.7	44.0	59.7	44.0	103.7	60.3	484.1	<	585.0	✓
S520	x	135	65.0	65.0	130.0	56.6	0.0	56.6	0.0	56.6	41.4	255.5	<	1579.5	Kuşatilmamiş
S520	y	130	110.0	25.0	50.0	56.6	40.8	56.6	40.8	97.4	65.0	446.4	<	585.0	✓
S120	x	135	65.0	65.0	120.0	38.3	0.0	38.3	0.0	38.3	47.2	154.0	<	1579.5	Kuşatilmamiş
S120	y	130	110.0	25.0	50.0	32.8	25.1	32.8	25.1	58.0	51.0	253.3	<	585.0	✓
S4021	x	140	70.0	70.0	140.0	18.7	12.6	18.7	12.6	31.3	0.0	164.2	<	1764.0	Kuşatilmamiş
S4021	y	140	70.0	70.0	140.0	15.6	0.0	15.6	0.0	15.6	0.0	81.8	<	1764.0	✓
S3021	x	140	70.0	70.0	140.0	33.2	16.6	33.2	22.9	56.1	52.1	242.2	<	1764.0	Kuşatilmamiş
S3021	y	140	70.0	70.0	140.0	19.5	0.0	19.5	0.0	19.5	32.8	69.5	<	1764.0	✓
S2021	x	140	70.0	70.0	140.0	37.7	22.0	37.7	31.4	69.1	65.8	294.1	<	1764.0	Kuşatilmamiş
S2021	y	140	70.0	70.0	140.0	31.4	0.0	31.4	0.0	31.4	44.1	120.9	<	1764.0	✓
S1021	x	140	70.0	70.0	140.0	47.1	18.9	47.1	31.4	78.6	80.4	332.0	<	1764.0	Kuşatilmamiş
S1021	y	140	70.0	70.0	140.0	44.0	0.0	44.0	0.0	44.0	54.5	176.4	<	1764.0	✓
S521	x	140	70.0	70.0	140.0	53.4	34.6	53.4	47.1	100.5	83.1	444.8	<	1764.0	Kuşatilmamiş
S521	y	140	70.0	70.0	140.0	53.4	0.0	53.4	0.0	53.4	59.4	221.0	<	1764.0	✓
S121	x	140	70.0	70.0	140.0	38.3	18.9	38.3	22.0	60.3	73.4	243.3	<	1764.0	Kuşatilmamiş
S121	y	140	70.0	70.0	140.0	33.2	0.0	33.2	0.0	33.2	58.1	116.1	<	1764.0	✓
S4022	x	140	70.0	70.0	140.0	15.6	12.1	15.6	12.1	27.7	0.0	145.2	<	1764.0	Kuşatilmamiş
S4022	y	140	70.0	70.0	140.0	15.6	0.0	15.6	0.0	15.6	0.0	81.8	<	1764.0	✓
S3022	x	140	70.0	70.0	140.0	17.5	18.9	17.5	18.9	36.3	57.9	182.8	<	1764.0	Kuşatilmamiş
S3022	y	140	70.0	70.0	140.0	26.6	0.0	26.6	0.0	26.6	44.7	94.7	<	1764.0	✓
S2022	x	140	70.0	70.0	140.0	25.1	22.0	25.1	22.0	47.1	72.8	174.7	<	1764.0	Kuşatilmamiş
S2022	y	140	70.0	70.0	140.0	35.2	0.0	35.2	0.0	35.2	55.3	125.9	<	1764.0	✓
S1022	x	140	70.0	70.0	140.0	28.3	25.1	28.3	25.1	53.4	80.3	200.2	<	1764.0	Kuşatilmamiş
S1022	y	140	70.0	70.0	140.0	44.0	0.0	44.0	0.0	44.0	71.4	159.6	<	1764.0	✓
S522	x	140	70.0	70.0	140.0	28.3	25.1	28.3	25.1	53.4	75.9	201.5	<	1764.0	Kuşatilmamiş
S522	y	140	70.0	70.0	140.0	50.3	0.0	50.3	0.0	50.3	76.9	187.1	<	1764.0	✓
S122	x	140	70.0	70.0	140.0	16.3	14.1	16.3	14.1	30.4	71.2	88.5	<	1764.0	Kuşatilmamiş
S122	y	140	70.0	70.0	140.0	29.7	0.0	29.7	0.0	29.7	66.9	89.0	<	1764.0	✓
S4023	x	140	70.0	70.0	140.0	18.7	12.6	18.7	12.6	31.3	0.0	164.2	<	1764.0	Kuşatilmamiş
S4023	y	140	70.0	70.0	140.0	15.6	0.0	15.6	0.0	15.6	0.0	81.8	<	1764.0	✓
S3023	x	140	70.0	70.0	140.0	33.2	22.9	33.2	16.6	56.1	52.1	242.2	<	1764.0	Kuşatilmamiş
S3023	y	140	70.0	70.0	140.0	19.5	0.0	19.5	0.0	19.5	32.8	69.5	<	1764.0	✓
S2023	x	140	70.0	70.0	140.0	40.8	31.4	40.8	22.0	72.3	68.8	310.6	<	1764.0	Kuşatilmamiş
S2023	y	140	70.0	70.0	140.0	31.4	0.0	31.4	0.0	31.4	44.0	120.9	<	1764.0	✓
S1023	x	140	70.0	70.0	140.0	47.1	31.4	47.1	18.9	78.6	80.4	332.0	<	1764.0	Kuşatilmamiş
S1023	y	140	70.0	70.0	140.0	44.0	0.0	44.0	0.0	44.0	54.5	176.5	<	1764.0	✓
S523	x	140	70.0	70.0	140.0	53.4	47.1	53.4	34.6	100.5	83.1	444.8	<	1764.0	Kuşatilmamiş
S523	y	140	70.0	70.0	140.0	53.4	0.0	53.4	0.0	53.4	59.4	221.1	<	1764.0	✓
S123	x	140	70.0	70.0	140.0	38.3	22.0	38.3	18.9	60.3	73.4	243.3	<	1764.0	Kuşatilmamiş
S123	y	140	70.0	70.0	140.0	33.2	0.0	33.2	0.0	33.2	58.1	116.1	<	1764.0	✓
S4024	x	130	67.5	67.5	125.0	18.7	0.0	18.7	0.0	18.7	0.0	98.3	<	1579.5	Kuşatilmamiş
S4024	y	135	25.0	105.0	50.0	23.4	14.1	23.4	13.6	37.5	0.0	197.0	<	607.5	✓
S3024	x	130	67.5	67.5	125.0	33.2	0.0	33.2	0.0	33.2	20.4	153.8	<	1579.5	Kuşatilmamiş
S3024	y	135	25.0	105.0	50.0	44.0	34.6	44.0	34.6	78.6	40.8	371.6	<	607.5	✓
S2024	x	130	67.5	67.5	125.0	44.0	0.0	44.0	0.0	44.0	25.1	201.9	<	1579.5	Kuşatilmamiş
S2024	y	135	25.0	105.0	50.0	53.4	40.8	53.4	40.8	94.3	51.3	443.6	<	607.5	✓
S1024	x	130	67.5	67.5	125.0	53.4	0.0	53.4	0.0	53.4	37.3	243.1	<	1579.5	Kuşatilmamiş
S1024	y	135	25.0	105.0	50.0	59.7	44.0	59.7	44.0	103.7	60.2	484.2	<	607.5	✓
S524	x	130	67.5	67.5	125.0	56.6	0.0	56.6	0.0	56.6	41.4	255.5	<	1579.5	Kuşatilmamiş
S524	y	135	25.0	105.0	50.0	56.6	40.8	56.6	40.8	97.4	64.9	446.5	<	607.5	✓
S124	x	130	67.5	67.5	125.0	38.3	0.0	38.3	0.0	38.3	47.2	154.0	<	1579.5	Kuşatilmamiş
S124	y	135	25.0	105.0	50.0	32.8	25.1	32.8	25.1	58.0	51.1	253.2	<	607.5	✓

STAAD V11

FİRMA : 03-23-2005

PROJE : kolonlukirişlisistem (kolonlukirişlisistem.ST4)

KUŞATILMIS KOLON KONTROLU

Kolon		Bx/By	bw1	bw2	bj	Asu1	Asa1	Asu2	Asa2	Ast	Vkol	Ve		Vmax	AÇIKLAMA
S4025	x	125	25.5	99.5	51.0	15.6	0.0	15.6	0.0	15.6	0.0	81.8	<	573.7	Kuşatilmamiş
S4025	y	125	100.0	25.0	50.0	17.1	0.0	17.1	0.0	17.1	0.0	89.9	<	562.5	✓
S3025	x	125	25.5	99.5	51.0	25.0	0.0	25.0	0.0	25.0	16.0	115.3	<	573.7	Kuşatilmamiş
S3025	y	125	100.0	25.0	50.0	25.1	0.0	25.1	0.0	25.1	14.9	117.1	<	562.5	✓
S2025	x	125	25.5	99.5	51.0	33.2	0.0	32.2	0.0	33.2	23.5	150.7	<	573.7	Kuşatilmamiş
S2025	y	125	100.0	25.0	50.0	31.4	0.0	31.4	0.0	31.4	21.2	143.8	<	562.5	✓
S1025	x	125	25.5	99.5	51.0	41.5	0.0	41.5	0.0	41.5	31.0	186.7	<	573.7	Kuşatilmamiş
S1025	y	125	100.0	25.0	50.0	40.8	0.0	40.8	0.0	40.8	30.1	184.4	<	562.5	✓
S525	x	125	25.5	99.5	51.0	47.1	0.0	47.1	0.0	47.1	35.0	212.5	<	573.7	Kuşatilmamiş
S525	y	125	100.0	25.0	50.0	47.1	0.0	47.1	0.0	47.1	37.6	209.8	<	562.5	✓
S125	x	125	25.5	99.5	51.0	29.7	0.0	29.7	0.0	29.7	39.8	118.1	<	573.7	Kuşatilmamiş
S125	y	125	100.0	25.0	50.0	29.7	0.0	29.7	0.0	29.7	40.0	115.9	<	562.5	✓
S4026	x	130	67.5	67.5	135.0	15.6	0.0	15.6	0.0	15.6	0.0	81.8	<	1579.5	Kuşatilmamiş
S4026	y	135	65.0	65.0	130.0	18.7	14.1	18.7	14.1	32.8	0.0	172.4	<	1579.5	✓
S3026	x	130	67.5	67.5	135.0	18.7	0.0	18.7	0.0	18.7	15.5	82.8	<	1579.5	Kuşatilmamiş
S3026	y	135	65.0	65.0	130.0	35.2	28.3	35.2	31.4	66.6	44.8	305.0	<	1579.5	✓
S2026	x	130	67.5	67.5	135.0	26.6	0.0	26.6	0.0	26.6	22.2	117.2	<	1579.5	Kuşatilmamiş
S2026	y	135	65.0	65.0	130.0	44.0	37.7	44.0	37.7	81.7	62.9	366.1	<	1579.5	✓
S1026	x	130	67.5	67.5	135.0	38.3	0.0	38.3	0.0	38.3	30.0	171.3	<	1579.5	Kuşatilmamiş
S1026	y	135	65.0	65.0	130.0	53.4	44.0	53.4	44.0	97.4	82.7	428.7	<	1579.5	✓
S526	x	130	67.5	67.5	135.0	44.0	0.0	44.0	0.0	44.0	35.5	195.5	<	1579.5	Kuşatilmamiş
S526	y	135	65.0	65.0	130.0	56.6	44.0	56.6	44.0	100.5	94.6	433.3	<	1579.5	✓
S126	x	130	67.5	67.5	135.0	32.8	0.0	32.8	0.0	32.8	44.5	127.9	<	1579.5	Kuşatilmamiş
S126	y	135	65.0	65.0	130.0	33.2	25.1	33.2	25.1	58.3	64.7	241.4	<	1579.5	✓
S4027	x	140	67.5	67.5	0.0	0.0	0.0	0.0	0.0	0.0	0.0	0.0	<	0.0	Kuşatilmamiş
S4027	y	140	70.0	70.0	140.0	15.6	12.6	15.6	12.6	28.2	0.0	147.8	<	1764.0	✓
S3027	x	140	67.5	67.5	0.0	0.0	0.0	0.0	0.0	0.0	1.2	-1.2	<	0.0	Kuşatilmamiş
S3027	y	140	70.0	70.0	140.0	32.8	18.9	32.8	18.9	51.7	48.8	222.6	<	1764.0	✓
S2027	x	140	67.5	67.5	0.0	0.0	0.0	0.0	0.0	0.0	1.3	-1.3	<	0.0	Kuşatilmamiş
S2027	y	140	70.0	70.0	140.0	41.5	28.3	41.5	28.3	69.8	67.6	298.7	<	1764.0	✓
S1027	x	140	67.5	67.5	0.0	0.0	0.0	0.0	0.0	0.0	1.5	-1.5	<	0.0	Kuşatilmamiş
S1027	y	140	70.0	70.0	140.0	50.3	37.7	50.3	37.7	88.0	87.7	374.2	<	1764.0	✓
S527	x	140	67.5	67.5	0.0	0.0	0.0	0.0	0.0	0.0	1.9	-1.9	<	0.0	Kuşatilmamiş
S527	y	140	70.0	70.0	140.0	53.4	40.8	53.4	40.8	94.2	99.9	395.0	<	1764.0	✓
S127	x	140	67.5	67.5	0.0	0.0	0.0	0.0	0.0	0.0	13.2	-13.2	<	0.0	Kuşatilmamiş
S127	y	140	70.0	70.0	140.0	32.8	25.1	32.8	25.1	58.0	75.7	228.6	<	1764.0	✓
S4028	x	130	67.5	67.5	135.0	15.6	0.0	15.6	0.0	15.6	0.0	81.8	<	1579.5	Kuşatilmamiş
S4028	y	135	65.0	65.0	130.0	18.7	14.1	18.7	14.1	32.8	0.0	172.4	<	1579.5	✓
S3028	x	130	67.5	67.5	135.0	18.7	0.0	18.7	0.0	18.7	15.5	82.8	<	1579.5	Kuşatilmamiş
S3028	y	135	65.0	65.0	130.0	35.2	28.3	35.2	31.4	66.6	44.7	305.0	<	1579.5	✓
S2028	x	130	67.5	67.5	135.0	26.6	0.0	26.6	0.0	26.6	22.2	117.2	<	1579.5	Kuşatilmamiş
S2028	y	135	65.0	65.0	130.0	44.0	37.7	44.0	37.7	81.7	62.8	366.1	<	1579.5	✓
S1028	x	130	67.5	67.5	135.0	38.3	0.0	38.3	0.0	38.3	30.0	171.3	<	1579.5	Kuşatilmamiş
S1028	y	135	65.0	65.0	130.0	53.4	44.0	53.4	44.0	97.4	82.7	428.7	<	1579.5	✓
S528	x	130	67.5	67.5	135.0	44.0	0.0	44.0	0.0	44.0	35.5	195.5	<	1579.5	Kuşatilmamiş
S528	y	135	65.0	65.0	130.0	56.6	44.0	56.6	44.0	100.5	94.6	433.3	<	1579.5	✓
S128	x	130	67.5	67.5	135.0	32.8	0.0	32.8	0.0	32.8	44.5	127.9	<	1579.5	Kuşatilmamiş
S128	y	135	65.0	65.0	130.0	33.2	25.1	33.2	25.1	58.3	64.8	241.4	<	1579.5	✓
S4029	x	125	99.5	25.5	51.0	15.6	0.0	15.6	0.0	15.6	0.0	81.8	<	573.7	Kuşatilmamiş
S4029	y	125	25.0	100.0	50.0	17.1	0.0	17.1	0.0	17.1	0.0	89.9	<	562.5	✓
S3029	x	125	99.5	25.5	51.0	25.0	0.0	25.0	0.0	25.0	16.0	115.3	<	573.7	Kuşatilmamiş
S3029	y	125	25.0	100.0	50.0	25.1	0.0	25.1	0.0	25.1	14.8	117.1	<	562.5	✓
S2029	x	125	99.5	25.5	51.0	33.2	0.0	33.2	0.0	33.2	23.5	150.7	<	573.7	Kuşatilmamiş
S2029	y	125	25.0	100.0	50.0	31.4	0.0	31.4	0.0	31.4	21.1	143.8	<	562.5	✓
S1029	x	125	99.5	25.5	51.0	41.5	0.0	41.5	0.0	41.5	31.0	186.7	<	573.7	Kuşatilmamiş
S1029	y	125	25.0	100.0	50.0	40.8	0.0	40.8	0.0	40.8	30.0	184.4	<	562.5	✓
S529	x	125	99.5	25.5	51.0	47.1	0.0	47.1	0.0	47.1	35.0	212.5	<	573.7	Kuşatilmamiş
S529	y	125	25.0	100.0	50.0	47.1	0.0	47.1	0.0	47.1	37.6	209.9	<	562.5	✓

STRA-CAD V11

FİRMA : 03-23-2005

PROJE : kolonlukirişlisistem (kolonlukirişlisistem.ST4)

KUŞATILMIS KOLON KONTROLU

Kolon		Bx/By	bw1	bw2	bj	Asu1	Asa1	Asu2	Asa2	Ast	Vkol	Ve	Vmax	AÇIKLAMA
S129	x	125	99.5	25.5	51.0	29.7	0.0	29.7	0.0	29.7	39.9	116.1 <	573.7	Kuşatilmamiş
S129	y	125	25.0	100.0	50.0	29.7	0.0	29.7	0.0	29.7	40.1	115.8 <	562.5	✓
S4030	x	115	25.0	85.0	50.0	15.6	0.0	15.6	0.0	15.6	0.0	81.8 <	517.5	Kuşatilmamiş
S4030	y	110	25.0	100.0	0.0	0.0	0.0	0.0	0.0	0.0	0.0	0.0 <	0.0	✓
S3030	x	115	25.0	85.0	50.0	18.7	0.0	18.7	0.0	18.7	15.3	83.0 <	517.5	Kuşatilmamiş
S3030	y	110	25.0	100.0	0.0	0.0	0.0	0.0	0.0	0.0	0.0	-8.0 <	0.0	✓
S2030	x	115	25.0	85.0	50.0	21.9	0.0	21.9	0.0	21.9	22.1	92.7 <	517.5	Kuşatilmamiş
S2030	y	110	25.0	100.0	0.0	0.0	0.0	0.0	0.0	0.0	13.3	-13.2 <	0.0	✓
S1030	x	115	25.0	85.0	50.0	32.8	0.0	32.8	0.0	32.8	31.0	141.4 <	517.5	Kuşatilmamiş
S1030	y	110	25.0	100.0	0.0	0.0	0.0	0.0	0.0	0.0	19.8	-19.8 <	0.0	✓
S530	x	115	25.0	85.0	50.0	38.3	0.0	38.3	0.0	38.3	38.4	162.8 <	517.5	Kuşatilmamiş
S530	y	110	25.0	100.0	0.0	0.0	0.0	0.0	0.0	0.0	23.9	-23.9 <	0.0	✓
S130	x	115	25.0	85.0	50.0	26.6	0.0	26.6	0.0	26.6	41.6	97.8 <	517.5	Kuşatilmamiş
S130	y	110	90.0	25.0	50.0	25.0	0.0	25.0	0.0	25.0	27.7	103.6 <	495.0	✓
S4021	x	115	85.0	25.0	50.0	15.6	0.0	15.6	0.0	15.6	0.0	81.8 <	517.5	Kuşatilmamiş
S4021	y	110	90.0	25.0	0.0	0.0	0.0	0.0	0.0	0.0	0.0	0.0 <	0.0	✓
S3021	x	115	85.0	25.0	50.0	18.7	0.0	18.7	0.0	18.7	15.3	83.0 <	517.5	Kuşatilmamiş
S3021	y	110	90.0	25.0	0.0	0.0	0.0	0.0	0.0	0.0	7.9	-7.9 <	0.0	✓
S2021	x	115	85.0	25.0	50.0	21.9	0.0	21.9	0.0	21.9	22.1	92.7 <	517.5	Kuşatilmamiş
S2021	y	110	90.0	25.0	0.0	0.0	0.0	0.0	0.0	0.0	13.2	-13.2 <	0.0	✓
S1021	x	115	85.0	25.0	50.0	32.8	0.0	32.8	0.0	32.8	31.0	141.4 <	517.5	Kuşatilmamiş
S1021	y	110	90.0	25.0	0.0	0.0	0.0	0.0	0.0	0.0	19.8	-19.8 <	0.0	✓
S521	x	115	85.0	25.0	50.0	38.3	0.0	38.3	0.0	38.3	38.4	162.8 <	517.5	Kuşatilmamiş
S521	y	110	90.0	25.0	0.0	0.0	0.0	0.0	0.0	0.0	23.9	-23.9 <	0.0	✓
S121	x	115	85.0	25.0	50.0	26.6	0.0	26.6	0.0	26.6	41.6	97.8 <	517.5	Kuşatilmamiş
S121	y	110	25.0	90.0	50.0	25.0	0.0	25.0	0.0	25.0	27.7	103.6 <	495.0	✓
S4022	x	125	25.5	164.5	51.0	22.8	0.0	22.8	0.0	22.8	0.0	172.4 <	573.7	Kuşatilmamiş
S4022	y	190	62.5	62.5	125.0	21.9	0.0	21.9	0.0	21.9	0.0	114.8 <	2137.5	✓
S3022	x	125	25.5	164.5	51.0	59.7	0.0	59.7	0.0	59.7	50.0	263.4 <	573.7	Kuşatilmamiş
S3022	y	190	62.5	62.5	125.0	35.2	0.0	35.2	0.0	35.2	21.1	163.6 <	2137.5	✓
S2022	x	125	25.5	164.5	51.0	69.1	0.0	69.1	0.0	69.1	64.0	298.9 <	573.7	Kuşatilmamiş
S2022	y	190	62.5	62.5	125.0	40.8	0.0	40.8	0.0	40.8	29.4	185.1 <	2137.5	✓
S1022	x	125	25.5	164.5	51.0	72.3	0.0	72.3	0.0	72.3	74.9	304.5 <	573.7	Kuşatilmamiş
S1022	y	190	62.5	62.5	125.0	50.3	0.0	50.3	0.0	50.3	40.1	223.9 <	2137.5	✓
S522	x	125	25.5	164.5	51.0	69.1	0.0	69.1	0.0	69.1	79.9	283.0 <	573.7	Kuşatilmamiş
S522	y	190	62.5	62.5	125.0	53.4	0.0	53.4	0.0	53.4	48.5	231.9 <	2137.5	✓
S122	x	125	25.5	164.5	51.0	35.2	0.0	35.2	0.0	35.2	85.9	98.8 <	573.7	Kuşatilmamiş
S122	y	190	62.5	62.5	125.0	30.0	0.0	30.0	0.0	30.0	82.7	75.1 <	2137.5	✓
S4023	x	130	25.0	105.0	50.0	20.3	18.9	20.3	18.9	39.1	0.0	285.4 <	585.0	Kuşatilmamiş
S4023	y	130	65.0	65.0	130.0	15.6	0.0	15.6	0.0	15.6	0.0	81.8 <	1521.0	✓
S3023	x	130	25.0	105.0	50.0	47.1	44.0	47.1	44.0	91.1	74.4	404.6 <	585.0	Kuşatilmamiş
S3023	y	130	65.0	65.0	130.0	32.8	0.0	32.8	0.0	32.8	21.8	150.6 <	1521.0	✓
S2023	x	130	25.0	105.0	50.0	56.6	56.6	56.6	56.6	113.1	91.7	502.1 <	585.0	Kuşatilmamiş
S2023	y	130	65.0	65.0	130.0	38.3	0.0	38.3	0.0	38.3	30.5	170.7 <	1521.0	✓
S1023	x	130	25.0	105.0	50.0	62.8	59.7	62.8	59.7	122.5	98.5	544.9 <	585.0	Kuşatilmamiş
S1023	y	130	65.0	65.0	130.0	47.1	0.0	47.1	0.0	47.1	40.7	206.8 <	1521.0	✓
S523	x	130	25.0	105.0	50.0	62.8	56.6	62.8	56.6	119.4	93.5	533.4 <	585.0	Kuşatilmamiş
S523	y	130	65.0	65.0	130.0	53.4	0.0	53.4	0.0	53.4	47.6	232.8 <	1521.0	✓
S123	x	130	25.0	105.0	50.0	35.2	28.3	35.2	28.3	63.5	64.3	268.9 <	585.0	Kuşatilmamiş
S123	y	130	65.0	65.0	130.0	32.8	0.0	32.8	0.0	32.8	52.5	119.9 <	1521.0	✓
S4024	x	125	164.5	25.5	51.0	32.8	0.0	32.8	0.0	32.8	0.0	172.4 <	573.7	Kuşatilmamiş
S4024	y	190	62.5	62.5	125.0	21.9	0.0	21.9	0.0	21.9	0.0	114.8 <	2137.5	✓
S3024	x	125	164.5	25.5	51.0	59.7	0.0	59.7	0.0	59.7	50.0	263.4 <	573.7	Kuşatilmamiş
S3024	y	190	62.5	62.5	125.0	35.2	0.0	35.2	0.0	35.2	21.1	163.6 <	2137.5	✓
S2024	x	125	164.5	25.5	51.0	69.1	0.0	69.1	0.0	69.1	64.0	298.9 <	573.7	Kuşatilmamiş
S2024	y	190	62.5	62.5	125.0	40.8	0.0	40.8	0.0	40.8	29.4	185.1 <	2137.5	✓
S1024	x	125	164.5	25.5	51.0	72.3	0.0	72.3	0.0	72.3	74.9	304.5 <	573.7	Kuşatilmamiş
S1024	y	190	62.5	62.5	125.0	50.3	0.0	50.3	0.0	50.3	40.1	223.9 <	2137.5	✓

STAA-CAD V11

FİRMA : 03-23-2005

PROJE : kolonlukirişlisistem (kolonlukirişlisistem.ST4)

KUŞATILMIS KOLON KONTROLU

Kolon		Bx/By	hw1	hw2	hj	Asu1	Asa1	Asu2	Asa2	Ast	Vkol	Ve		Vmax	AÇIKLAMA
S534	x	125	164.5	25.5	51.0	69.1	0.0	69.1	0.0	69.1	79.9	283.0	<	573.7	Kuşatilmamiş
S534	y	190	62.5	62.5	125.0	53.4	0.0	53.4	0.0	53.4	48.5	231.9	<	2137.5	✓
S134	x	125	164.5	25.5	51.0	35.2	0.0	35.2	0.0	35.2	85.9	98.8	<	573.7	Kuşatilmamiş
S134	y	190	62.5	62.5	125.0	33.2	0.0	33.2	0.0	33.2	82.7	91.5	<	2137.5	✓

STA4-CAD V11

FİRMA : | 03-23-2005

PROJE : kolonlukirişlisistem (kolonlukirişlisistem.ST4)

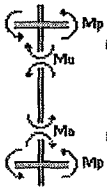

$$Mu = \frac{Mhu}{Mhu + Mha} \sum Mp$$

$$Ve = \frac{Mu + Ma}{Ln}$$

$$Ma = \frac{Mha}{Mhu + Mha} \sum Mp$$

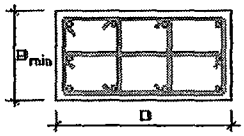

Ln : Kolon kirişler arası serbest yüksekliği
Hk : Kolon kat yüksekliği
Fk : Kolon boyunca etriye alan toplamı
Letr : hesap doğrultusundaki etriye boşlukların toplamı

$$\rho = \frac{Fk \cdot Letr}{Ac \cdot Hk} \geq 0{,}0025$$

$$Vr = 0{,}55 \cdot Ac \cdot f_{ctd} + \rho \cdot Ac \cdot f_{yd} > Ve$$

Dikdörtgen kolonlarda $Letr \leq D$ $Ac = B \cdot D$

$$\rho = \frac{Fk \cdot D}{B \cdot D \cdot Hk} = \frac{Fk}{B \cdot Hk}$$

$$Vr = 0{,}55 \cdot B \cdot D \cdot f_{ctd} + Fk \cdot D \cdot f_{yd} / Hk > Ve$$

KOLONLARIN KESME GUVENLİK KONTROLU

Kolon	+X Mp / Mc / Mr	-X Mp / Mc / Mr	+Y Mp / Mc / Mr	-Y Mp / Mc / Mr
S101 Lnx= 2.35 Lny= 3.25	813.02 116.91 ┼ Mu= 58.53 815.05 0.00 ┼ Ma=815.05 0.00 Ve=371.73 Vr=517.41 ✓	813.02 -113.6 ┼ Mu= 56.87 815.05 0.00 ┼ Ma=815.05 0.00 Ve=371.03 Vr=517.41 ✓	923.60 0.00 ┼ Mu= 0.00 1184.0 0.00 ┼ Ma=1184.0 0.00 Ve=364.33 Vr=474.41 ✓	923.60 0.00 ┼ Mu= 0.00 1184.0 0.00 ┼ Ma=1184.0 0.00 Ve=364.33 Vr=474.41 ✓
S102 Lnx= 2.35 Lny= 2.35	413.72 142.49 ┼ Mu= 70.99 410.79 0.00 ┼ Ma=410.79 0.00 Ve=205.02 Vr=300.54 ✓	413.72 -141.2 ┼ Mu= 70.44 410.79 0.00 ┼ Ma=410.79 0.00 Ve=204.78 Vr=300.54 ✓	145.09 70.72 ┼ Mu= 34.32 136.89 0.00 ┼ Ma=136.89 0.00 Ve= 72.86 Vr=250.08 ✓	145.09 -79.78 ┼ Mu= 38.73 136.89 0.00 ┼ Ma=136.89 0.00 Ve= 74.73 Vr=250.08 ✓
S103 Lnx= 2.45 Lny= 3.25	444.06 133.27 ┼ Mu= 66.27 439.26 0.00 ┼ Ma=439.26 0.00 Ve=206.34 Vr=325.20 ✓	444.06 -133.2 ┼ Mu= 66.27 439.26 0.00 ┼ Ma=439.26 0.00 Ve=206.34 Vr=325.20 ✓	310.77 0.00 ┼ Mu= 0.00 292.82 0.00 ┼ Ma=292.82 0.00 Ve= 90.10 Vr=235.23 ✓	310.77 0.00 ┼ Mu= 0.00 292.82 0.00 ┼ Ma=292.82 0.00 Ve= 90.10 Vr=235.23 ✓
S104 Lnx= 2.35 Lny= 2.35	413.01 141.38 ┼ Mu= 70.44 410.10 0.00 ┼ Ma=410.10 0.00 Ve=204.49 Vr=300.54 ✓	413.01 -142.5 ┼ Mu= 71.00 410.10 0.00 ┼ Ma=410.10 0.00 Ve=204.72 Vr=300.54 ✓	144.46 70.72 ┼ Mu= 34.32 136.18 0.00 ┼ Ma=136.18 0.00 Ve= 72.55 Vr=250.08 ✓	144.46 -79.78 ┼ Mu= 38.71 136.18 0.00 ┼ Ma=136.18 0.00 Ve= 74.42 Vr=250.08 ✓
S105 Lnx= 2.35 Lny= 3.25	798.61 113.61 ┼ Mu= 56.88 800.63 0.00 ┼ Ma=800.63 0.00 Ve=364.90 Vr=514.44 ✓	798.61 -116.9 ┼ Mu= 58.53 800.63 0.00 ┼ Ma=800.63 0.00 Ve=365.60 Vr=514.44 ✓	879.85 0.00 ┼ Mu= 0.00 1133.1 0.00 ┼ Ma=1133.1 0.00 Ve=348.67 Vr=466.28 ✓	879.85 0.00 ┼ Mu= 0.00 1133.1 0.00 ┼ Ma=1133.1 0.00 Ve=348.67 Vr=466.28 ✓
S106 Lnx= 2.45 Lny= 2.35	163.59 62.79 ┼ Mu= 32.99 181.67 0.00 ┼ Ma=181.67 0.00 Ve= 87.61 Vr=275.50 ✓	163.59 -62.39 ┼ Mu= 32.83 181.67 0.00 ┼ Ma=181.67 0.00 Ve= 87.55 Vr=275.50 ✓	219.56 46.20 ┼ Mu= 23.80 232.28 0.00 ┼ Ma=232.28 0.00 Ve=108.97 Vr=276.93 ✓	219.56 -79.78 ┼ Mu= 41.01 232.28 0.00 ┼ Ma=232.28 0.00 Ve=116.30 Vr=276.93 ✓
S107 Lnx= 2.45 Lny= 2.35	162.17 62.36 ┼ Mu= 33.58 189.16 0.00 ┼ Ma=189.16 0.00 Ve= 90.91 Vr=275.50 ✓	162.17 -62.72 ┼ Mu= 33.77 189.16 0.00 ┼ Ma=189.16 0.00 Ve= 90.99 Vr=275.50 ✓	218.65 46.80 ┼ Mu= 24.20 239.56 0.00 ┼ Ma=239.56 0.00 Ve=112.24 Vr=276.93 ✓	218.65 -79.78 ┼ Mu= 41.71 239.56 0.00 ┼ Ma=239.56 0.00 Ve=119.69 Vr=276.93 ✓
S108 Lnx= 2.35 Lny= 2.35	551.72 61.23 ┼ Mu= 30.43 545.02 0.00 ┼ Ma=545.02 0.00 Ve=244.87 Vr=394.12 ✓	551.72 -92.65 ┼ Mu= 46.54 545.02 0.00 ┼ Ma=545.02 0.00 Ve=251.73 Vr=394.12 ✓	560.06 145.60 ┼ Mu= 72.59 556.84 0.00 ┼ Ma=556.84 0.00 Ve=267.84 Vr=394.12 ✓	560.06 -141.0 ┼ Mu= 70.32 556.84 0.00 ┼ Ma=556.84 0.00 Ve=266.88 Vr=394.12 ✓
S109 Lnx= 2.35 Lny= 2.35	551.34 93.66 ┼ Mu= 46.54 544.57 0.00 ┼ Ma=544.57 0.00 Ve=251.54 Vr=394.12 ✓	551.34 -61.23 ┼ Mu= 30.42 544.57 0.00 ┼ Ma=544.57 0.00 Ve=244.68 Vr=394.12 ✓	559.77 145.60 ┼ Mu= 72.59 556.53 0.00 ┼ Ma=556.53 0.00 Ve=267.71 Vr=394.12 ✓	559.77 -141.0 ┼ Mu= 70.32 556.53 0.00 ┼ Ma=556.53 0.00 Ve=266.74 Vr=394.12 ✓
S110 Lnx= 2.35 Lny= 2.35	269.19 47.83 ┼ Mu= 24.71 287.76 0.00 ┼ Ma=287.76 0.00 Ve=132.97 Vr=394.12 ✓	269.19 -89.14 ┼ Mu= 46.06 287.76 0.00 ┼ Ma=287.76 0.00 Ve=142.05 Vr=394.12 ✓	496.38 54.10 ┼ Mu= 27.26 505.14 0.00 ┼ Ma=505.14 0.00 Ve=226.56 Vr=394.12 ✓	496.38 -102.5 ┼ Mu= 51.73 505.14 0.00 ┼ Ma=505.14 0.00 Ve=236.97 Vr=394.12 ✓

STAA-CAD V11

FİRMA : | 03-23-2005

PROJE : kolonlukirişlisistem (kolonlukirişlisistem.ST4)

KOLONLARIN KESME GUVENLİK KONTROLU

Kolon	+X Mp Mc Mr	-X Mp Mc Mr	+Y Mp Mc Mr	-Y Mp Mc Mr
S111	735.35 103.55 ┼ Mu= 51.86 737.58 Lnx= 2.35 Lny= 3.25 0.00 ┼ Ma=737.58 0.00 Ve=325.92 Vr=437.69 ✓	735.35 -54.10 ┼ Mu= 27.09 737.58 0.00 ┼ Ma=737.58 0.00 Ve=325.39 Vr=437.69 ✓	711.22 0.00 ┼ Mu= 0.00 704.75 0.00 ┼ Ma=704.75 0.00 Ve=216.85 Vr=437.69 ✓	711.22 0.00 ┼ Mu= 0.00 704.75 0.00 ┼ Ma=704.75 0.00 Ve=216.85 Vr=437.69 ✓
S112	779.20 54.10 ┼ Mu= 27.10 781.97 Lnx= 2.35 Lny= 3.25 0.00 ┼ Ma=781.97 0.00 Ve=344.29 Vr=454.53 ✓	779.20 -103.5 ┼ Mu= 51.87 781.97 0.00 ┼ Ma=781.97 0.00 Ve=354.83 Vr=454.53 ✓	739.20 0.00 ┼ Mu= 0.00 733.27 0.00 ┼ Ma=733.27 0.00 Ve=225.62 Vr=443.06 ✓	739.20 0.00 ┼ Mu= 0.00 733.27 0.00 ┼ Ma=733.27 0.00 Ve=225.62 Vr=443.06 ✓
S113	268.00 89.10 ┼ Mu= 46.03 286.47 Lnx= 2.35 Lny= 2.35 0.00 ┼ Ma=286.47 0.00 Ve=141.49 Vr=394.12 ✓	268.00 -47.87 ┼ Mu= 24.73 286.47 0.00 ┼ Ma=286.47 0.00 Ve=132.43 Vr=394.12 ✓	495.72 59.10 ┼ Mu= 27.28 504.48 0.00 ┼ Ma=504.48 0.00 Ve=226.28 Vr=394.12 ✓	495.72 -102.5 ┼ Mu= 51.74 504.48 0.00 ┼ Ma=504.48 0.00 Ve=236.69 Vr=394.12 ✓
S114	137.72 47.79 ┼ Mu= 23.27 130.65 Lnx= 2.35 Lny= 2.95 0.00 ┼ Ma=130.65 0.00 Ve= 65.50 Vr=190.45 ✓	137.72 -60.73 ┼ Mu= 29.57 130.65 0.00 ┼ Ma=130.65 0.00 Ve= 68.18 Vr=190.45 ✓	163.10 9.16 ┼ Mu= 4.78 178.18 0.00 ┼ Ma=178.18 0.00 Ve= 62.02 Vr=190.45 ✓	163.10 -7.13 ┼ Mu= 3.72 178.18 0.00 ┼ Ma=178.18 0.00 Ve= 61.66 Vr=190.45 ✓
S115	137.70 60.73 ┼ Mu= 29.57 130.63 Lnx= 2.35 Lny= 2.95 0.00 ┼ Ma=130.63 0.00 Ve= 68.17 Vr=190.45 ✓	137.70 -47.79 ┼ Mu= 23.27 130.63 0.00 ┼ Ma=130.63 0.00 Ve= 65.49 Vr=190.45 ✓	163.08 9.16 ┼ Mu= 4.78 178.18 0.00 ┼ Ma=178.18 0.00 Ve= 62.02 Vr=190.45 ✓	163.08 -7.13 ┼ Mu= 3.72 178.18 0.00 ┼ Ma=178.18 0.00 Ve= 61.66 Vr=190.45 ✓
S116	136.46 54.10 ┼ Mu= 26.28 128.91 Lnx= 2.35 Lny= 2.95 0.00 ┼ Ma=128.91 0.00 Ve= 66.04 Vr=190.45 ✓	136.46 -60.72 ┼ Mu= 29.50 128.91 0.00 ┼ Ma=128.91 0.00 Ve= 67.41 Vr=190.45 ✓	161.46 7.13 ┼ Mu= 3.53 158.24 0.00 ┼ Ma=158.24 0.00 Ve= 54.84 Vr=190.45 ✓	161.46 -9.16 ┼ Mu= 4.54 158.24 0.00 ┼ Ma=158.24 0.00 Ve= 55.18 Vr=190.45 ✓
S117	136.45 60.73 ┼ Mu= 29.50 128.91 Lnx= 2.35 Lny= 2.95 0.00 ┼ Ma=128.91 0.00 Ve= 67.41 Vr=190.45 ✓	136.45 -54.10 ┼ Mu= 26.28 128.91 0.00 ┼ Ma=128.91 0.00 Ve= 66.04 Vr=190.45 ✓	161.46 7.13 ┼ Mu= 3.53 158.25 0.00 ┼ Ma=158.25 0.00 Ve= 54.84 Vr=190.45 ✓	161.46 -9.16 ┼ Mu= 4.54 158.25 0.00 ┼ Ma=158.25 0.00 Ve= 55.18 Vr=190.45 ✓
S118	745.15 46.33 ┼ Mu= 23.03 735.07 Lnx= 2.35 Lny= 2.35 0.00 ┼ Ma=735.07 0.00 Ve=322.59 Vr=460.10 ✓	745.15 -70.36 ┼ Mu= 34.95 735.07 0.00 ┼ Ma=735.07 0.00 Ve=327.67 Vr=460.10 ✓	828.64 102.57 ┼ Mu= 51.27 828.22 0.00 ┼ Ma=828.22 0.00 Ve=374.25 Vr=460.10 ✓	828.64 -61.11 ┼ Mu= 30.55 828.22 0.00 ┼ Ma=828.22 0.00 Ve=365.43 Vr=460.10 ✓
S119	744.97 70.42 ┼ Mu= 34.97 734.88 Lnx= 2.35 Lny= 2.35 0.00 ┼ Ma=734.88 0.00 Ve=327.80 Vr=460.10 ✓	744.97 -46.35 ┼ Mu= 23.01 734.88 0.00 ┼ Ma=734.88 0.00 Ve=322.51 Vr=460.10 ✓	828.64 102.57 ┼ Mu= 51.27 828.22 0.00 ┼ Ma=828.22 0.00 Ve=374.25 Vr=460.10 ✓	828.64 -61.11 ┼ Mu= 30.55 828.22 0.00 ┼ Ma=828.22 0.00 Ve=365.43 Vr=460.10 ✓
S120	422.91 61.26 ┼ Mu= 29.77 399.85 Lnx= 2.35 Lny= 2.35 0.00 ┼ Ma=399.85 0.00 Ve=182.82 Vr=454.53 ✓	422.91 -118.1 ┼ Mu= 57.40 399.85 0.00 ┼ Ma=399.85 0.00 Ve=194.57 Vr=454.53 ✓	758.01 182.72 ┼ Mu= 91.11 753.85 0.00 ┼ Ma=753.85 0.00 Ve=359.56 Vr=443.06 ✓	758.01 -182.7 ┼ Mu= 91.11 753.85 0.00 ┼ Ma=753.85 0.00 Ve=359.56 Vr=443.06 ✓
S121	921.63 188.76 ┼ Mu= 94.31 920.20 Lnx= 2.35 Lny= 2.35 0.00 ┼ Ma=920.20 0.00 Ve=421.71 Vr=523.06 ✓	921.63 -179.1 ┼ Mu= 89.51 920.20 0.00 ┼ Ma=920.20 0.00 Ve=429.67 Vr=523.06 ✓	803.72 89.42 ┼ Mu= 44.09 781.74 0.00 ┼ Ma=781.74 0.00 Ve=351.42 Vr=523.06 ✓	803.72 -103.5 ┼ Mu= 51.06 781.74 0.00 ┼ Ma=781.74 0.00 Ve=354.38 Vr=523.06 ✓
S122	886.42 87.27 ┼ Mu= 43.38 876.10 Lnx= 2.35 Lny= 2.35 0.00 ┼ Ma=876.10 0.00 Ve=391.27 Vr=523.06 ✓	886.42 -99.58 ┼ Mu= 49.50 876.10 0.00 ┼ Ma=876.10 0.00 Ve=393.87 Vr=523.06 ✓	855.03 80.15 ┼ Mu= 39.75 841.37 0.00 ┼ Ma=841.37 0.00 Ve=374.95 Vr=523.06 ✓	855.03 -93.54 ┼ Mu= 46.39 841.37 0.00 ┼ Ma=841.37 0.00 Ve=377.77 Vr=523.06 ✓

STAA-CAD V11

FİRMA : | 03-23-2005

PROJE : kolonlukirişlisistem (kolonlukirişlisistem.ST4)

KOLONLARIN KESME GÜVENLİK KONTROLÜ

Kolon	+X Mp Mc Mr	-X Mp Mc Mr	+Y Mp Mc Mr	-Y Mp Mc Mr
S123 Lnx= 2.35 Lny= 2.35	921.63 168.30 ┼ Mu= 84.08 920.19 0.00 ┼ Ma=920.19 0.00 Ve=427.35 Vr=523.06 ✓	921.63 -188.7 ┼ Mu= 94.31 920.19 0.00 ┼ Ma=920.19 0.00 Ve=431.70 Vr=523.06 ✓	803.53 89.42 ┼ Mu= 44.09 781.53 0.00 ┼ Ma=781.53 0.00 Ve=351.33 Vr=523.06 ✓	803.53 -103.5 ┼ Mu= 51.06 781.53 0.00 ┼ Ma=781.53 0.00 Ve=354.30 Vr=523.06 ✓
S124 Lnx= 2.35 Lny= 2.35	406.13 118.12 ┼ Mu= 57.39 383.85 0.00 ┼ Ma=383.85 0.00 Ve=187.76 Vr=443.06 ✓	406.13 -61.26 ┼ Mu= 29.77 383.85 0.00 ┼ Ma=383.85 0.00 Ve=176.01 Vr=443.06 ✓	787.92 182.72 ┼ Mu= 91.12 783.68 0.00 ┼ Ma=783.68 0.00 Ve=372.25 Vr=454.53 ✓	787.92 -182.7 ┼ Mu= 91.12 783.68 0.00 ┼ Ma=783.68 0.00 Ve=372.25 Vr=454.53 ✓
S125 Lnx= 2.35 Lny= 2.35	406.91 61.19 ┼ Mu= 29.82 386.77 0.00 ┼ Ma=386.77 0.00 Ve=177.27 Vr=415.70 ✓	406.91 -93.61 ┼ Mu= 45.62 386.77 0.00 ┼ Ma=386.77 0.00 Ve=184.00 Vr=415.70 ✓	527.21 93.54 ┼ Mu= 46.05 511.24 0.00 ┼ Ma=511.24 0.00 Ve=237.15 Vr=415.70 ✓	527.21 -80.15 ┼ Mu= 39.46 511.24 0.00 ┼ Ma=511.24 0.00 Ve=234.34 Vr=415.70 ✓
S126 Lnx= 2.35 Lny= 2.35	735.16 102.72 ┼ Mu= 50.89 721.95 0.00 ┼ Ma=721.95 0.00 Ve=328.87 Vr=443.06 ✓	735.16 -70.86 ┼ Mu= 35.11 721.95 0.00 ┼ Ma=721.95 0.00 Ve=322.15 Vr=443.06 ✓	701.11 183.71 ┼ Mu= 91.06 689.11 0.00 ┼ Ma=689.11 0.00 Ve=331.99 Vr=454.53 ✓	701.11 -183.7 ┼ Mu= 91.06 689.11 0.00 ┼ Ma=689.11 0.00 Ve=331.99 Vr=454.53 ✓
S127 Lnx= 3.25 Lny= 2.35	880.99 0.15 ┼ Mu= 0.07 880.59 0.00 ┼ Ma=880.59 0.00 Ve=270.97 Vr=523.06 ✓	880.99 -0.15 ┼ Mu= 0.07 880.59 0.00 ┼ Ma=880.59 0.00 Ve=270.97 Vr=523.06 ✓	920.91 182.72 ┼ Mu= 84.09 785.08 0.00 ┼ Ma=785.08 0.00 Ve=369.86 Vr=523.06 ✓	920.91 -182.7 ┼ Mu= 84.09 785.08 0.00 ┼ Ma=785.08 0.00 Ve=369.86 Vr=523.06 ✓
S128 Lnx= 2.35 Lny= 2.35	735.08 78.86 ┼ Mu= 35.11 721.86 0.00 ┼ Ma=721.86 0.00 Ve=322.11 Vr=443.06 ✓	735.08 -102.7 ┼ Mu= 50.89 721.86 0.00 ┼ Ma=721.86 0.00 Ve=328.82 Vr=443.06 ✓	701.06 183.71 ┼ Mu= 91.06 689.04 0.00 ┼ Ma=689.04 0.00 Ve=331.96 Vr=454.53 ✓	701.06 -183.7 ┼ Mu= 91.06 689.04 0.00 ┼ Ma=689.04 0.00 Ve=331.96 Vr=454.53 ✓
S129 Lnx= 2.35 Lny= 2.35	406.50 93.62 ┼ Mu= 45.62 386.33 0.00 ┼ Ma=386.33 0.00 Ve=183.81 Vr=415.70 ✓	406.50 -61.18 ┼ Mu= 29.81 386.33 0.00 ┼ Ma=386.33 0.00 Ve=177.08 Vr=415.70 ✓	527.06 93.54 ┼ Mu= 46.05 511.08 0.00 ┼ Ma=511.08 0.00 Ve=237.08 Vr=415.70 ✓	527.06 -80.15 ┼ Mu= 39.46 511.08 0.00 ┼ Ma=511.08 0.00 Ve=234.27 Vr=415.70 ✓
S130 Lnx= 2.45 Lny= 2.35	265.26 71.00 ┼ Mu= 37.58 298.33 0.00 ┼ Ma=298.33 0.00 Ve=137.11 Vr=325.23 ✓	265.36 -74.65 ┼ Mu= 39.51 295.33 0.00 ┼ Ma=298.33 0.00 Ve=137.89 Vr=325.23 ✓	250.52 79.78 ┼ Mu= 42.64 287.63 0.00 ┼ Ma=287.63 0.00 Ve=140.54 Vr=325.20 ✓	250.52 -47.79 ┼ Mu= 25.54 287.63 0.00 ┼ Ma=287.63 0.00 Ve=133.27 Vr=325.20 ✓
S131 Lnx= 2.45 Lny= 2.35	265.17 74.67 ┼ Mu= 39.52 298.15 0.00 ┼ Ma=298.15 0.00 Ve=137.83 Vr=325.23 ✓	265.17 -70.98 ┼ Mu= 37.57 298.15 0.00 ┼ Ma=298.15 0.00 Ve=137.03 Vr=325.23 ✓	250.41 79.78 ┼ Mu= 42.64 287.54 0.00 ┼ Ma=287.54 0.00 Ve=140.50 Vr=325.20 ✓	250.41 -47.79 ┼ Mu= 25.54 287.54 0.00 ┼ Ma=287.54 0.00 Ve=133.22 Vr=325.20 ✓
S132 Lnx= 2.35 Lny= 2.35	892.81 154.84 ┼ Mu= 80.10 956.81 0.00 ┼ Ma=956.81 0.00 Ve=441.24 Vr=763.74 ✓	892.81 -180.2 ┼ Mu= 93.24 956.81 0.00 ┼ Ma=956.81 0.00 Ve=446.83 Vr=763.74 ✓	727.79 94.54 ┼ Mu= 51.76 892.55 0.00 ┼ Ma=892.55 0.00 Ve=401.83 Vr=666.72 ✓	727.79 -80.15 ┼ Mu= 43.88 892.55 0.00 ┼ Ma=892.55 0.00 Ve=398.48 Vr=666.72 ✓
S133 Lnx= 2.35 Lny= 2.35	705.23 198.74 ┼ Mu= 98.70 695.84 0.00 ┼ Ma=695.84 0.00 Ve=338.10 Vr=437.69 ✓	705.23 -198.7 ┼ Mu= 98.70 695.84 0.00 ┼ Ma=695.84 0.00 Ve=338.10 Vr=437.69 ✓	384.35 102.57 ┼ Mu= 49.72 361.63 0.00 ┼ Ma=361.63 0.00 Ve=175.04 Vr=437.69 ✓	384.35 -80.15 ┼ Mu= 38.86 361.63 0.00 ┼ Ma=361.63 0.00 Ve=170.42 Vr=437.69 ✓
S134 Lnx= 2.35 Lny= 2.35	892.76 180.26 ┼ Mu= 93.25 956.77 0.00 ┼ Ma=956.77 0.00 Ve=446.82 Vr=763.74 ✓	892.76 -154.8 ┼ Mu= 80.09 956.77 0.00 ┼ Ma=956.77 0.00 Ve=441.22 Vr=763.74 ✓	727.72 103.55 ┼ Mu= 56.69 892.45 0.00 ┼ Ma=892.45 0.00 Ve=402.89 Vr=666.72 ✓	727.72 -80.15 ┼ Mu= 43.88 892.45 0.00 ┼ Ma=892.45 0.00 Ve=398.44 Vr=666.72 ✓

STAA-CAD V11

FİRMA : | 03-23-2005

PROJE : kolonlukirişlisistem (kolonlukirişlisistem.ST4)

KOLONLARIN KESME GÜVENLİK KONTROLÜ

Kolon	+X Mp / Mc / Mr	-X Mp / Mc / Mr	+Y Mp / Mc / Mr	-Y Mp / Mc / Mr
S201 Lnx= 2.35 Lny= 3.25	811.08 151.63 ┼ Mu= 75.91 813.02 116.91 ┼ Ma= 58.38 815.05 Ve= 57.14 Vr=517.41 ✓	811.08 -151.6 ┼ Mu= 75.92 813.02 -113.6 ┼ Ma= 56.73 815.05 Ve= 56.45 Vr=517.41 ✓	943.62 0.00 ┼ Mu= 0.00 923.60 0.00 ┼ Ma= 0.00 1184.0 Ve= 0.00 Vr=474.41 ✓	943.62 0.00 ┼ Mu= 0.00 923.60 0.00 ┼ Ma= 0.00 1184.0 Ve= 0.00 Vr=474.41 ✓
S202 Lnx= 2.35 Lny= 2.35	416.36 211.69 ┼ Mu=105.51 413.72 142.49 ┼ Ma= 71.50 410.79 Ve= 75.32 Vr=300.54 ✓	416.36 -212.6 ┼ Mu=105.98 413.72 -141.3 ┼ Ma= 70.95 410.79 Ve= 75.29 Vr=300.54 ✓	163.53 89.42 ┼ Mu= 42.04 145.09 70.72 ┼ Ma= 36.39 126.89 Ve= 33.37 Vr=350.08 ✓	163.53 -117.9 ┼ Mu= 55.46 145.09 -79.78 ┼ Ma= 41.05 126.89 Ve= 41.07 Vr=350.08 ✓
S203 Lnx= 2.45 Lny= 3.25	448.68 191.08 ┼ Mu= 95.05 444.06 133.27 ┼ Ma= 67.00 439.26 Ve= 66.14 Vr=325.20 ✓	448.68 -191.0 ┼ Mu= 95.05 444.06 -133.2 ┼ Ma= 67.00 439.26 Ve= 66.14 Vr=325.20 ✓	330.43 0.00 ┼ Mu= 0.00 310.77 0.00 ┼ Ma= 0.00 292.82 Ve= 0.00 Vr=335.23 ✓	330.43 0.00 ┼ Mu= 0.00 310.77 0.00 ┼ Ma= 0.00 292.82 Ve= 0.00 Vr=335.23 ✓
S204 Lnx= 2.35 Lny= 2.35	415.67 212.62 ┼ Mu=105.97 413.01 141.28 ┼ Ma= 70.94 410.10 Ve= 75.28 Vr=300.54 ✓	415.67 -211.7 ┼ Mu=105.52 413.01 -142.5 ┼ Ma= 71.50 410.10 Ve= 75.32 Vr=300.54 ✓	162.99 89.42 ┼ Mu= 42.02 144.46 70.72 ┼ Ma= 36.40 126.18 Ve= 33.37 Vr=350.08 ✓	162.99 -117.9 ┼ Mu= 55.43 144.46 -79.78 ┼ Ma= 41.07 126.18 Ve= 41.06 Vr=350.08 ✓
S205 Lnx= 2.35 Lny= 3.25	796.71 151.67 ┼ Mu= 75.92 798.61 113.61 ┼ Ma= 56.73 800.63 Ve= 56.45 Vr=514.44 ✓	796.71 -151.6 ┼ Mu= 75.90 798.61 -116.9 ┼ Ma= 58.28 800.63 Ve= 57.14 Vr=514.44 ✓	899.57 0.00 ┼ Mu= 0.00 879.85 0.00 ┼ Ma= 0.00 1133.1 Ve= 0.00 Vr=466.28 ✓	899.57 0.00 ┼ Mu= 0.00 879.85 0.00 ┼ Ma= 0.00 1133.1 Ve= 0.00 Vr=466.28 ✓
S206 Lnx= 2.45 Lny= 3.25	304.74 87.00 ┼ Mu= 38.39 163.59 62.79 ┼ Ma= 29.71 181.67 Ve= 24.53 Vr=275.50 ✓	304.74 -82.65 ┼ Mu= 28.87 163.59 -62.29 ┼ Ma= 29.56 181.67 Ve= 23.85 Vr=275.50 ✓	219.94 0.00 ┼ Mu= 0.00 219.56 46.20 ┼ Ma= 22.50 232.28 Ve= 6.92 Vr=276.93 ✓	219.94 0.00 ┼ Mu= 0.00 219.56 -79.78 ┼ Ma= 38.77 232.28 Ve= 11.93 Vr=276.93 ✓
S207 Lnx= 2.45 Lny= 3.25	304.94 82.65 ┼ Mu= 28.69 162.17 62.36 ┼ Ma= 28.78 189.16 Ve= 23.46 Vr=275.50 ✓	304.94 -87.00 ┼ Mu= 38.20 162.17 -62.72 ┼ Ma= 28.95 189.16 Ve= 24.14 Vr=275.50 ✓	219.04 0.00 ┼ Mu= 0.00 218.65 46.20 ┼ Ma= 22.09 239.56 Ve= 6.80 Vr=276.93 ✓	219.04 0.00 ┼ Mu= 0.00 218.65 -79.78 ┼ Ma= 38.07 239.56 Ve= 11.71 Vr=276.93 ✓
S208 Lnx= 2.35 Lny= 2.35	557.64 89.59 ┼ Mu= 44.56 551.72 61.23 ┼ Ma= 30.80 545.02 Ve= 32.07 Vr=394.12 ✓	557.64 -126.6 ┼ Mu= 62.01 551.72 -93.65 ┼ Ma= 47.11 545.02 Ve= 46.86 Vr=394.12 ✓	561.89 287.50 ┼ Mu=103.58 560.06 145.60 ┼ Ma= 73.01 556.84 Ve= 75.14 Vr=394.12 ✓	561.89 -180.6 ┼ Mu= 90.19 560.06 -141.0 ┼ Ma= 70.73 556.84 Ve= 68.48 Vr=394.12 ✓
S209 Lnx= 2.35 Lny= 2.35	557.23 126.71 ┼ Mu= 63.02 551.34 93.66 ┼ Ma= 47.12 544.57 Ve= 46.87 Vr=394.12 ✓	557.23 -89.57 ┼ Mu= 44.55 551.34 -61.23 ┼ Ma= 30.80 544.57 Ve= 32.06 Vr=394.12 ✓	561.58 287.50 ┼ Mu=103.58 559.77 145.60 ┼ Ma= 73.01 556.53 Ve= 75.15 Vr=394.12 ✓	561.58 -180.6 ┼ Mu= 90.20 559.77 -141.0 ┼ Ma= 70.73 556.53 Ve= 68.48 Vr=394.12 ✓
S210 Lnx= 2.35 Lny= 2.35	200.77 80.22 ┼ Mu= 37.89 269.19 47.83 ┼ Ma= 23.12 287.76 Ve= 25.96 Vr=394.12 ✓	200.77 -109.3 ┼ Mu= 51.64 269.19 -89.14 ┼ Ma= 43.08 287.76 Ve= 40.31 Vr=394.12 ✓	506.61 89.42 ┼ Mu= 44.26 496.28 54.10 ┼ Ma= 26.81 505.14 Ve= 30.24 Vr=394.12 ✓	506.61 -141.5 ┼ Mu= 70.06 496.28 -102.5 ┼ Ma= 50.84 505.14 Ve= 51.44 Vr=394.12 ✓
S211 Lnx= 2.35 Lny= 3.25	733.42 133.25 ┼ Mu= 66.73 735.35 103.55 ┼ Ma= 51.70 737.58 Ve= 50.39 Vr=437.69 ✓	733.42 -80.15 ┼ Mu= 40.13 735.35 -54.10 ┼ Ma= 27.01 737.58 Ve= 28.57 Vr=437.69 ✓	716.56 0.00 ┼ Mu= 0.00 711.22 0.00 ┼ Ma= 0.00 704.75 Ve= 0.00 Vr=437.69 ✓	716.56 0.00 ┼ Mu= 0.00 711.22 0.00 ┼ Ma= 0.00 704.75 Ve= 0.00 Vr=437.69 ✓
S212 Lnx= 2.35 Lny= 3.25	775.96 80.15 ┼ Mu= 40.16 779.20 54.10 ┼ Ma= 27.00 781.97 Ve= 28.58 Vr=454.53 ✓	775.96 -133.2 ┼ Mu= 66.78 779.20 -103.5 ┼ Ma= 51.69 781.97 Ve= 50.41 Vr=454.53 ✓	744.07 0.00 ┼ Mu= 0.00 739.20 0.00 ┼ Ma= 0.00 733.27 Ve= 0.00 Vr=443.06 ✓	744.07 0.00 ┼ Mu= 0.00 739.20 0.00 ┼ Ma= 0.00 733.27 Ve= 0.00 Vr=443.06 ✓

ST4-CAD V11

FİRMA :

03-23-2005

PROJE : kolonlukirişlisistem (kolonlukirişlisistem.ST4)

KOLONLARIN KESME GÜVENLİK KONTROLU

Kolon	+X Mp Mc Mr	-X Mp Mc Mr	+Y Mp Mc Mr	-Y Mp Mc Mr
S213 Lnx= 2.35 Lny= 2.35	299.65 109.31 ┼ Mu= 51.61 268.00 89.10 ┼ Ma= 43.07 286.47 Ve= 40.29 Vr=394.12 ✓	299.65 -80.27 ┼ Mu= 37.89 268.00 -47.87 ┼ Ma= 23.14 286.47 Ve= 25.97 Vr=394.12 ✓	505.94 89.42 ┼ Mu= 44.26 495.72 54.10 ┼ Ma= 26.81 504.48 Ve= 30.24 Vr=394.12 ✓	505.94 -141.5 ┼ Mu= 70.06 495.72 -102.5 ┼ Ma= 50.84 504.48 Ve= 51.44 Vr=394.12 ✓
S214 Lnx= 2.35 Lny= 2.95	145.35 70.72 ┼ Mu= 34.41 137.72 47.79 ┼ Ma= 24.53 130.65 Ve= 25.08 Vr=190.45 ✓	145.35 -70.24 ┼ Mu= 34.22 137.72 -60.73 ┼ Ma= 31.17 130.65 Ve= 27.83 Vr=190.45 ✓	166.18 9.16 ┼ Mu= 4.54 163.10 9.16 ┼ Ma= 4.38 178.18 Ve= 3.02 Vr=190.45 ✓	166.18 -8.80 ┼ Mu= 4.36 163.10 -7.12 ┼ Ma= 3.41 178.18 Ve= 2.63 Vr=190.45 ✓
S215 Lnx= 2.35 Lny= 2.95	145.32 70.34 ┼ Mu= 34.22 137.70 60.73 ┼ Ma= 31.17 130.63 Ve= 27.83 Vr=190.45 ✓	145.32 -70.72 ┼ Mu= 34.41 137.70 -47.79 ┼ Ma= 24.53 130.63 Ve= 25.08 Vr=190.45 ✓	166.15 9.16 ┼ Mu= 4.54 163.08 9.16 ┼ Ma= 4.38 178.18 Ve= 3.02 Vr=190.45 ✓	166.15 -8.80 ┼ Mu= 4.36 163.08 -7.12 ┼ Ma= 3.41 178.18 Ve= 2.63 Vr=190.45 ✓
S216 Lnx= 2.35 Lny= 2.95	144.58 70.72 ┼ Mu= 34.34 136.46 54.10 ┼ Ma= 27.82 128.91 Ve= 26.45 Vr=190.45 ✓	144.58 -79.79 ┼ Mu= 38.74 136.46 -60.73 ┼ Ma= 31.23 128.91 Ve= 29.78 Vr=190.45 ✓	164.85 9.20 ┼ Mu= 4.60 161.46 7.13 ┼ Ma= 3.60 158.24 Ve= 2.78 Vr=190.45 ✓	164.85 -9.16 ┼ Mu= 4.53 161.46 -9.16 ┼ Ma= 4.63 158.24 Ve= 3.11 Vr=190.45 ✓
S217 Lnx= 2.35 Lny= 2.95	144.57 79.79 ┼ Mu= 38.74 136.45 60.73 ┼ Ma= 31.23 128.91 Ve= 29.77 Vr=190.45 ✓	144.57 -70.72 ┼ Mu= 34.34 136.45 -54.10 ┼ Ma= 27.82 128.91 Ve= 26.45 Vr=190.45 ✓	164.85 9.20 ┼ Mu= 4.60 161.46 7.13 ┼ Ma= 3.60 158.25 Ve= 2.78 Vr=190.45 ✓	164.85 -9.16 ┼ Mu= 4.53 161.46 -9.16 ┼ Ma= 4.63 158.25 Ve= 3.11 Vr=190.45 ✓
S218 Lnx= 2.35 Lny= 2.35	758.89 70.82 ┼ Mu= 35.09 745.15 46.38 ┼ Ma= 23.35 735.07 Ve= 24.87 Vr=460.10 ✓	758.89 -93.63 ┼ Mu= 46.39 745.15 -70.38 ┼ Ma= 35.43 735.07 Ve= 34.82 Vr=460.10 ✓	828.61 133.28 ┼ Mu= 66.64 828.64 102.57 ┼ Ma= 51.30 828.22 Ve= 50.19 Vr=460.10 ✓	828.61 -107.4 ┼ Mu= 53.73 828.64 -61.11 ┼ Ma= 30.56 828.22 Ve= 25.87 Vr=460.10 ✓
S219 Lnx= 2.35 Lny= 2.35	758.72 93.65 ┼ Mu= 46.40 744.97 70.42 ┼ Ma= 35.45 734.88 Ve= 34.83 Vr=460.10 ✓	758.72 -70.80 ┼ Mu= 35.08 744.97 -46.35 ┼ Ma= 23.33 734.88 Ve= 24.85 Vr=460.10 ✓	828.61 133.28 ┼ Mu= 66.64 828.64 102.57 ┼ Ma= 51.30 828.22 Ve= 50.19 Vr=460.10 ✓	828.61 -107.4 ┼ Mu= 53.73 828.64 -61.11 ┼ Ma= 30.56 828.22 Ve= 25.87 Vr=460.10 ✓
S220 Lnx= 2.35 Lny= 2.35	463.62 85.62 ┼ Mu= 42.75 422.91 61.26 ┼ Ma= 31.49 399.85 Ve= 31.59 Vr=454.53 ✓	463.62 -149.8 ┼ Mu= 71.49 422.91 -118.1 ┼ Ma= 60.71 399.85 Ve= 56.26 Vr=454.53 ✓	758.29 249.52 ┼ Mu=124.74 758.01 182.72 ┼ Ma= 91.61 753.85 Ve= 92.06 Vr=443.06 ✓	758.29 -249.5 ┼ Mu=124.74 758.01 -182.7 ┼ Ma= 91.61 753.85 Ve= 92.06 Vr=443.06 ✓
S221 Lnx= 2.35 Lny= 2.35	922.18 266.00 ┼ Mu=132.96 921.63 188.76 ┼ Ma= 94.45 920.20 Ve= 96.77 Vr=523.06 ✓	922.18 -239.2 ┼ Mu=119.56 921.62 -179.1 ┼ Ma= 89.65 920.20 Ve= 89.03 Vr=523.06 ✓	826.36 124.84 ┼ Mu= 61.55 803.72 89.42 ┼ Ma= 45.33 781.74 Ve= 45.48 Vr=523.06 ✓	826.36 -141.5 ┼ Mu= 69.79 803.72 -103.5 ┼ Ma= 52.49 781.74 Ve= 52.04 Vr=523.06 ✓
S222 Lnx= 2.35 Lny= 2.35	896.28 121.76 ┼ Mu= 60.54 886.42 87.27 ┼ Ma= 43.89 876.10 Ve= 44.44 Vr=523.06 ✓	896.28 -141.5 ┼ Mu= 70.38 886.42 -99.58 ┼ Ma= 50.08 876.10 Ve= 51.26 Vr=523.06 ✓	869.33 116.24 ┼ Mu= 57.84 855.03 80.15 ┼ Ma= 40.40 841.37 Ve= 41.72 Vr=523.06 ✓	869.33 -133.2 ┼ Mu= 66.09 855.03 -93.54 ┼ Ma= 47.15 841.37 Ve= 48.19 Vr=523.06 ✓
S223 Lnx= 2.35 Lny= 2.35	922.18 227.46 ┼ Mu=112.70 921.63 168.30 ┼ Ma= 84.21 920.19 Ve= 84.22 Vr=523.06 ✓	922.18 -266.0 ┼ Mu=132.97 921.63 -188.7 ┼ Ma= 94.46 920.19 Ve= 96.75 Vr=523.06 ✓	826.20 124.84 ┼ Mu= 61.55 803.53 89.42 ┼ Ma= 45.33 781.53 Ve= 45.48 Vr=523.06 ✓	826.20 -141.5 ┼ Mu= 69.79 803.53 -103.5 ┼ Ma= 52.50 781.53 Ve= 52.04 Vr=523.06 ✓
S224 Lnx= 2.35 Lny= 2.35	445.35 149.86 ┼ Mu= 71.48 406.13 115.12 ┼ Ma= 60.72 383.85 Ve= 56.26 Vr=443.06 ✓	445.35 -85.62 ┼ Mu= 42.75 406.13 -61.26 ┼ Ma= 31.49 383.85 Ve= 31.59 Vr=443.06 ✓	788.25 249.52 ┼ Mu=124.74 787.92 182.72 ┼ Ma= 91.61 783.68 Ve= 92.06 Vr=454.53 ✓	788.25 -249.5 ┼ Mu=124.74 787.92 -182.7 ┼ Ma= 91.61 783.68 Ve= 92.06 Vr=454.53 ✓

STAAD V7

FİRMA :

03-23-2005

PROJE : kolonlukirişlisistem (kolonlukirişlisistem.ST4)

KOLONLARIN KESME GÜVENLİK KONTROLU

Kolon	+X Mp Mc Mr	-X Mp Mc Mr	+Y Mp Mc Mr	-Y Mp Mc Mr
S225 Lnx= 2.35 Lny= 2.35	429.45 89.52 ┼ Mu= 43.56 406.91 61.19 ┼ Ma= 31.37 386.77 Ve= 31.88 Vr=415.70 ✓	429.45 -126.6 ┼ Mu= 61.61 406.91 -93.61 ┼ Ma= 47.99 386.77 Ve= 46.64 Vr=415.70 ✓	544.91 124.84 ┼ Mu= 61.39 527.21 93.54 ┼ Ma= 47.49 511.24 Ve= 46.33 Vr=415.70 ✓	544.91 -107.4 ┼ Mu= 52.85 527.21 -80.15 ┼ Ma= 40.69 511.24 Ve= 39.80 Vr=415.70 ✓
S226 Lnx= 2.35 Lny= 2.35	747.97 133.50 ┼ Mu= 66.17 735.16 102.72 ┼ Ma= 51.82 721.95 Ve= 50.21 Vr=443.06 ✓	747.97 -98.74 ┼ Mu= 48.94 735.16 -70.86 ┼ Ma= 35.75 721.95 Ve= 36.04 Vr=443.06 ✓	712.07 266.40 ┼ Mu=132.17 701.11 183.71 ┼ Ma= 92.65 689.11 Ve= 95.67 Vr=454.53 ✓	712.07 -266.4 ┼ Mu=132.17 701.11 -183.7 ┼ Ma= 92.65 689.11 Ve= 95.67 Vr=454.53 ✓
S227 Lnx= 2.35 Lny= 2.35	900.56 0.21 ┼ Mu= 0.10 890.99 0.15 ┼ Ma= 0.07 880.59 Ve= 0.05 Vr=523.06 ✓	900.56 -0.21 ┼ Mu= 0.10 890.99 -0.15 ┼ Ma= 0.07 880.59 Ve= 0.05 Vr=523.06 ✓	815.31 257.80 ┼ Mu=136.74 920.91 182.72 ┼ Ma= 98.64 785.08 Ve=100.16 Vr=523.06 ✓	815.31 -257.8 ┼ Mu=136.74 920.91 -182.7 ┼ Ma= 98.64 785.08 Ve=100.16 Vr=523.06 ✓
S228 Lnx= 2.35 Lny= 2.35	747.89 98.74 ┼ Mu= 48.94 735.08 70.86 ┼ Ma= 35.75 721.86 Ve= 36.04 Vr=443.06 ✓	747.89 -133.5 ┼ Mu= 66.17 735.08 -102.7 ┼ Ma= 51.82 721.86 Ve= 50.21 Vr=443.06 ✓	712.02 266.40 ┼ Mu=132.17 701.06 183.71 ┼ Ma= 92.65 689.04 Ve= 95.67 Vr=454.53 ✓	712.02 -266.4 ┼ Mu=132.17 701.06 -183.7 ┼ Ma= 92.65 689.04 Ve= 95.67 Vr=454.53 ✓
S229 Lnx= 2.35 Lny= 2.35	429.06 126.64 ┼ Mu= 61.61 406.50 93.62 ┼ Ma= 48.00 386.33 Ve= 46.64 Vr=415.70 ✓	429.06 -89.51 ┼ Mu= 43.55 406.50 -61.18 ┼ Ma= 31.37 386.33 Ve= 31.88 Vr=415.70 ✓	544.78 124.84 ┼ Mu= 61.39 527.06 93.54 ┼ Ma= 47.49 511.08 Ve= 46.33 Vr=415.70 ✓	544.78 -107.4 ┼ Mu= 52.84 527.06 -80.15 ┼ Ma= 40.69 511.08 Ve= 39.80 Vr=415.70 ✓
S230 Lnx= 2.45 Lny= 2.35	292.27 94.86 ┼ Mu= 45.14 265.36 71.00 ┼ Ma= 33.42 238.33 Ve= 32.07 Vr=325.23 ✓	292.27 -103.9 ┼ Mu= 49.46 265.36 -74.65 ┼ Ma= 35.14 238.33 Ve= 34.53 Vr=325.23 ✓	269.00 103.55 ┼ Mu= 49.94 250.52 79.78 ┼ Ma= 37.14 287.63 Ve= 47.05 Vr=325.20 ✓	269.00 -70.72 ┼ Mu= 34.10 250.52 -47.79 ┼ Ma= 22.24 287.63 Ve= 23.98 Vr=325.20 ✓
S231 Lnx= 2.45 Lny= 2.35	292.09 103.97 ┼ Mu= 49.47 265.17 74.67 ┼ Ma= 35.15 238.15 Ve= 24.54 Vr=325.23 ✓	292.09 -94.83 ┼ Mu= 45.12 265.17 -70.98 ┼ Ma= 33.41 238.15 Ve= 32.06 Vr=325.23 ✓	268.89 103.55 ┼ Mu= 49.93 250.41 79.78 ┼ Ma= 37.14 287.54 Ve= 47.05 Vr=325.20 ✓	268.89 -70.72 ┼ Mu= 34.10 250.41 -47.79 ┼ Ma= 22.24 287.54 Ve= 23.98 Vr=325.20 ✓
S232 Lnx= 2.35 Lny= 2.35	903.87 228.84 ┼ Mu=113.72 892.81 154.84 ┼ Ma= 74.74 956.81 Ve= 80.19 Vr=763.74 ✓	903.87 -252.4 ┼ Mu=125.45 892.81 -180.2 ┼ Ma= 87.00 956.81 Ve= 90.41 Vr=763.74 ✓	807.96 141.56 ┼ Mu= 67.57 737.79 94.54 ┼ Ma= 42.78 892.55 Ve= 46.96 Vr=666.72 ✓	807.96 -107.4 ┼ Mu= 51.29 737.79 -80.15 ┼ Ma= 36.27 892.55 Ve= 37.26 Vr=666.72 ✓
S233 Lnx= 2.35 Lny= 2.35	713.80 274.62 ┼ Mu=136.48 705.23 198.74 ┼ Ma=100.04 695.84 Ve=100.65 Vr=437.69 ✓	713.88 -274.5 ┼ Mu=136.47 705.23 -198.7 ┼ Ma=100.03 695.84 Ve=100.64 Vr=437.69 ✓	425.21 141.56 ┼ Mu= 67.21 384.35 102.57 ┼ Ma= 52.85 361.63 Ve= 51.09 Vr=437.69 ✓	425.21 -107.4 ┼ Mu= 51.02 384.35 -80.15 ┼ Ma= 41.30 361.63 Ve= 39.28 Vr=437.69 ✓
S234 Lnx= 2.35 Lny= 2.35	903.83 252.49 ┼ Mu=125.47 892.76 189.26 ┼ Ma= 87.01 956.77 Ve= 90.42 Vr=763.74 ✓	903.83 -228.8 ┼ Mu=113.70 892.76 -154.8 ┼ Ma= 74.73 956.77 Ve= 80.15 Vr=763.74 ✓	807.91 141.56 ┼ Mu= 67.56 737.72 103.55 ┼ Ma= 46.66 892.45 Ve= 48.69 Vr=666.72 ✓	807.91 -107.4 ┼ Mu= 51.29 737.72 -80.15 ┼ Ma= 36.27 892.45 Ve= 37.26 Vr=666.72 ✓
S301 Lnx= 2.35 Lny= 2.25	809.24 157.42 ┼ Mu= 78.80 811.08 151.63 ┼ Ma= 75.72 813.02 Ve= 65.76 Vr=517.41 ✓	809.24 -151.6 ┼ Mu= 75.92 811.08 -151.6 ┼ Ma= 75.74 813.02 Ve= 64.54 Vr=517.41 ✓	966.27 0.00 ┼ Mu= 0.00 943.62 0.00 ┼ Ma= 0.00 923.60 Ve= 0.00 Vr=474.41 ✓	966.27 0.00 ┼ Mu= 0.00 943.62 0.00 ┼ Ma= 0.00 923.60 Ve= 0.00 Vr=474.41 ✓
S302 Lnx= 2.35 Lny= 2.35	419.40 235.15 ┼ Mu=117.15 416.36 211.69 ┼ Ma=106.18 413.72 Ve= 95.03 Vr=300.54 ✓	419.40 -237.2 ┼ Mu=118.20 416.36 -212.6 ┼ Ma=106.66 413.72 Ve= 95.69 Vr=300.54 ✓	179.90 98.59 ┼ Mu= 46.92 163.53 89.42 ┼ Ma= 47.38 145.09 Ve= 40.13 Vr=350.08 ✓	179.90 -126.5 ┼ Mu= 60.26 163.53 -117.9 ┼ Ma= 62.51 145.09 Ve= 52.24 Vr=350.08 ✓

STAA-CAD V11

FİRMA :

03-23-2005

PROJE : kolonlukirişlisistem

(kolonlukirişlisistem.ST4)

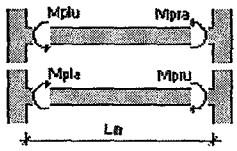

$$V_e = \frac{M_{plu} + M_{pra}}{L_n}$$

$$V_o = \frac{M_{pla} + M_{pru}}{L_n}$$

$V_o < V_r$

$V_e < 0.22\ b_w\ d\ f_{cd}$

KİRİŞLERİN KESME GÜVENLİK KONTROLU (tm)

Kiriş	Ln	Mplu	Mpla	Mpru	Mpra	Vdl +	Vpl =	Vel <	Vrl	Vdr +	Vpr =	Ver <	Vrr	✓,✗
K101	1.55	50.95	46.30	79.78	70.72	3.64	109.89	113.53	128.87	0.55	113.87	114.43	128.87	✓
K102	3.00	70.61	62.66	70.61	62.66	4.95	62.09	67.04	79.23	4.27	62.09	66.35	79.23	✓
K103	3.00	70.61	62.66	70.61	62.66	4.27	62.09	66.36	79.23	4.94	62.09	67.03	79.23	✓
K104	1.55	79.78	70.72	50.95	46.30	0.52	113.87	114.40	128.87	3.61	109.89	113.50	128.87	✓
K105	3.10	62.32	62.66	70.61	62.66	4.21	56.53	60.74	79.23	7.28	60.28	67.57	79.23	✓
K106	3.10	70.61	62.66	62.32	62.66	7.26	60.28	67.54	79.23	4.22	56.53	60.75	79.23	✓
K107	7.86	93.54	61.11	93.54	61.11	15.99	27.55	43.53	89.66	15.99	27.55	43.54	89.66	✓
K108	7.45	89.06	47.79	98.17	54.10	16.12	26.92	43.04	89.66	25.46	27.45	52.91	89.66	✓
K111	7.10	103.55	54.10	94.54	47.79	25.45	29.86	55.31	75.86	16.14	29.32	45.47	75.86	✓
K112	4.01	60.73	47.79	60.73	47.79	7.14	37.88	45.02	89.66	7.14	37.88	45.02	89.66	✓
K113	4.01	60.73	54.10	60.73	54.10	6.80	40.09	46.88	89.66	6.80	40.09	46.88	89.66	✓
K114	7.81	70.24	46.30	70.24	46.30	13.00	20.91	33.91	89.66	12.99	20.91	33.90	89.66	✓
K115	6.47	117.97	61.11	117.97	61.11	21.95	38.75	60.70	75.86	25.56	38.75	64.31	75.86	✓
K116	6.38	117.97	70.72	53.31	51.34	13.03	37.15	50.18	89.66	15.12	27.22	42.34	89.66	✓
K117	6.38	53.31	46.20	117.97	65.74	15.12	26.12	41.24	89.66	13.09	36.02	49.06	89.66	✓
K118	6.47	117.97	61.11	117.97	61.11	25.53	38.75	64.28	75.86	21.98	38.75	60.73	75.86	✓
K119	7.45	92.54	61.11	102.57	70.72	14.48	30.89	45.37	89.66	16.37	30.78	47.15	89.66	✓
K120	7.15	102.57	70.72	93.54	61.11	16.37	32.07	48.44	89.66	14.48	32.18	46.67	89.66	✓
K121	3.07	74.61	70.94	74.61	70.94	4.99	66.37	71.36	79.23	4.99	66.37	71.31	79.23	✓
K122	3.07	74.61	70.94	74.61	70.94	4.94	66.37	71.31	79.23	4.98	66.37	71.35	79.23	✓
K123	5.78	109.23	80.15	109.23	89.42	11.99	48.12	60.11	75.86	10.87	45.87	56.74	75.86	✓
K124	5.78	109.23	89.42	109.23	80.15	10.88	45.87	56.75	75.86	11.98	48.12	60.10	75.86	✓
K125	3.50	102.57	80.15	93.54	80.15	4.86	73.09	77.95	89.66	7.34	69.48	76.82	89.66	✓
K126	7.40	102.57	54.10	102.57	80.15	16.79	34.59	51.38	89.66	16.33	29.66	45.99	89.66	✓
K127	3.45	41.01	41.41	79.78	47.79	0.72	36.03	36.76	89.66	10.93	49.18	60.11	89.66	✓
K128	3.60	79.78	46.30	41.01	41.41	11.45	47.13	58.58	89.66	0.62	33.95	34.57	89.66	✓
K129	3.64	103.55	80.15	94.54	80.15	10.00	70.75	80.75	89.66	12.43	67.28	79.71	89.66	✓
K130	3.77	103.55	89.42	103.55	80.15	8.34	68.22	76.57	89.66	13.34	71.66	85.00	89.66	✓
K132	7.02	70.24	75.27	98.17	56.05	13.20	25.21	38.40	89.66	18.30	34.59	52.89	89.66	✓
K133	2.75	79.78	70.72	70.24	70.72	8.62	76.48	85.09	89.66	4.86	71.68	76.54	89.66	✓
K134	1.20	7.13	9.16	7.13	9.16	1.20	19.01	20.21	37.27	1.35	19.01	20.35	37.27	✓
K136	4.21	102.57	80.15	102.57	80.15	17.28	60.84	78.12	89.66	13.61	60.84	74.45	89.66	✓
K137	3.74	93.54	80.15	102.57	80.15	9.27	64.93	74.21	89.66	15.66	68.31	83.96	89.66	✓
K140	1.20	7.13	9.16	7.13	9.16	1.19	19.01	20.19	37.27	1.33	19.01	20.34	37.27	✓
K142	7.02	70.24	75.27	98.17	56.05	13.17	25.21	38.38	89.66	18.29	34.59	52.88	89.66	✓
K143	2.75	79.78	70.72	70.24	70.72	8.63	76.48	85.11	89.66	4.90	71.68	76.58	89.66	✓
K144	2.64	103.55	80.15	103.55	80.15	10.00	70.75	80.75	89.66	12.43	70.75	83.19	89.66	✓
K145	3.77	103.55	89.42	103.55	80.15	8.36	68.22	76.58	89.66	13.36	71.66	85.02	89.66	✓
K146	3.45	41.01	41.41	79.78	47.79	0.72	36.03	36.75	89.66	10.94	49.18	60.11	89.66	✓
K147	3.60	79.78	46.30	41.01	41.41	11.45	47.13	58.58	89.66	0.62	33.95	34.57	89.66	✓
K148	3.50	102.57	80.15	93.54	80.15	4.86	73.09	77.95	89.66	7.34	69.48	76.82	89.66	✓
K149	7.40	102.57	54.10	102.57	80.15	16.79	34.59	51.38	89.66	16.33	29.66	45.99	89.66	✓
K201	1.55	72.62	61.11	109.23	116.24	5.58	170.58	176.16	189.20	2.50	153.86	156.36	189.20	✓
K202	3.00	96.31	102.38	96.31	94.77	5.31	89.02	94.33	113.88	3.91	92.57	96.48	113.88	✓
K203	3.00	96.31	94.77	96.31	102.38	3.93	92.57	96.50	113.88	5.28	89.02	94.31	113.88	✓
K204	1.55	109.23	116.24	72.62	61.11	2.44	153.86	156.30	189.20	5.52	170.58	176.10	189.20	✓
K205	3.10	82.65	87.00	90.52	79.05	3.32	73.14	76.47	113.88	8.17	80.30	88.46	113.88	✓
K206	3.10	90.52	79.05	82.65	87.00	8.13	80.30	88.42	113.88	3.35	73.14	76.49	113.88	✓
K207	7.86	126.55	89.42	126.55	89.42	15.62	38.47	54.09	75.86	15.62	38.47	54.09	75.86	✓
K208	7.45	109.23	80.15	126.55	80.15	15.36	35.61	50.97	75.86	25.03	38.87	63.90	75.86	✓
K211	7.10	133.28	80.15	116.24	80.15	25.02	42.12	67.14	75.86	15.38	38.75	54.13	75.86	✓
K212	4.01	70.34	70.72	70.34	70.72	7.14	49.24	56.38	89.66	7.14	49.24	56.38	89.66	✓
K213	4.01	79.78	70.72	79.78	70.72	6.80	52.54	59.34	89.66	6.80	52.54	59.34	89.66	✓
K214	7.81	93.54	70.72	93.54	70.72	12.91	29.44	42.35	89.66	12.90	29.44	42.34	89.66	✓
K215	6.47	149.66	89.42	149.66	89.42	22.21	51.73	73.94	82.19	25.30	51.73	77.04	82.19	✓
K216	6.38	149.66	116.24	70.72	70.72	12.90	48.36	61.26	75.86	15.46	41.02	56.49	75.86	✓
K217	6.38	70.72	70.72	149.66	116.24	15.46	41.02	56.48	89.66	12.91	48.36	61.27	89.66	✓
K218	6.47	149.66	89.42	149.66	89.42	25.28	51.73	77.01	82.19	22.23	51.73	73.97	82.19	✓
K219	7.45	126.55	89.42	126.55	98.53	14.33	42.32	56.65	75.86	15.70	40.61	56.32	75.86	✓
K220	7.15	133.28	98.53	133.28	89.42	15.70	43.64	59.34	65.75	14.32	43.42	57.74	65.75	✓
K221	3.07	103.88	94.77	103.88	94.77	5.21	90.59	95.80	113.88	4.71	90.59	95.30	113.88	✓
K222	3.07	103.88	94.77	103.88	94.77	4.72	90.59	95.31	113.88	5.20	90.59	95.79	113.88	✓
K223	5.78	157.60	124.84	149.66	124.84	12.56	68.41	80.97	82.19	10.30	66.49	76.79	82.19	✓
K224	5.78	149.66	124.84	157.60	124.84	10.30	66.49	76.79	82.19	12.55	68.41	80.97	82.19	✓
K225	3.50	133.28	116.24	124.84	107.47	3.27	96.30	99.57	128.87	8.93	96.42	105.37	128.87	✓
K226	7.40	141.56	89.42	133.28	116.24	17.00	48.81	65.81	70.45	16.11	42.16	58.27	70.45	✓
K227	3.45	46.99	51.34	103.55	70.72	0.10	47.77	47.86	75.86	11.76	62.86	74.61	75.86	✓
K229	3.64	141.56	124.84	141.56	107.47	8.03	95.91	103.94	128.87	14.40	102.60	117.00	128.87	✓
K230	3.77	141.56	124.84	141.56	124.84	7.53	98.93	106.46	128.87	14.15	98.93	113.08	128.87	✓
K232	7.02	91.26	116.24	126.55	107.47	13.96	39.62	53.58	89.66	17.79	48.42	66.21	89.66	✓
K233	2.75	117.97	89.42	91.26	89.42	11.35	105.39	116.74	128.87	2.12	91.82	93.94	128.87	✓
K234	1.20	8.80	9.16	9.30	9.16	1.16	20.95	22.11	37.27	1.39	21.54	22.92	37.27	✓
K236	4.21	141.56	116.24	141.56	107.47	16.68	82.91	99.54	128.87	14.27	85.82	100.10	128.87	✓
K237	3.74	123.28	116.24	141.56	116.24	9.06	93.26	102.34	128.87	15.87	96.37	112.24	128.87	✓
K240	1.20	8.80	9.16	9.30	9.16	1.15	20.95	22.10	37.27	1.37	21.54	22.91	37.27	✓
K242	7.02	91.26	116.24	126.55	107.47	13.92	39.62	53.56	89.66	17.78	48.42	66.20	89.66	✓
K243	2.75	117.97	89.42	91.26	89.42	11.36	105.39	116.75	128.87	2.17	91.82	93.99	128.87	✓
K244	3.64	141.56	124.84	141.56	107.47	8.03	95.91	103.94	128.87	14.40	102.60	117.00	128.87	✓
K245	3.77	141.56	124.84	141.56	124.84	7.55	98.93	106.47	128.87	14.17	98.93	113.10	128.87	✓

ST4-CAD V11

FİRMA :

03-23-2005

PROJE : kolonlukirişlisistem

(kolonlukirişlisistem.ST4)

KİRİŞLERİN KESME GÜVENLİK KONTROLU (tm)

Kiriş	Ln	Mplu	Mpla	Mpru	Mpra	Vdl +	Vpl =	Vel <	Vrl	Vdr +	Vpr =	Ver <	Vrr	✓,✗
K246	3.45	46.99	51.34	103.55	70.72	0.10	47.77	47.87	75.86	11.76	62.86	74.62	75.86	✓
K248	3.50	133.28	116.24	124.84	107.47	3.26	96.30	99.56	128.87	8.94	96.43	105.37	128.87	✓
K249	7.40	141.56	89.42	133.28	116.24	17.00	48.81	65.80	70.45	16.12	42.16	58.28	70.45	✓
K301	1.55	72.62	61.11	117.97	133.28	7.33	185.97	193.30	189.20	4.24	161.76	166.00	189.20	✗
K302	3.00	103.88	117.10	103.88	102.38	5.57	96.10	101.67	113.88	3.69	102.95	106.59	113.88	✓
K303	3.00	103.38	102.38	103.88	117.10	3.67	102.95	106.63	113.88	5.54	96.10	101.64	113.88	✓
K304	1.55	117.97	133.28	72.62	61.11	4.16	161.75	165.92	189.20	7.25	185.97	193.22	189.20	✗
K305	3.10	88.56	87.00	96.31	79.05	2.53	75.82	78.35	113.88	8.96	82.92	91.88	113.88	✓
K306	3.10	96.31	79.05	88.56	87.00	8.91	82.92	91.83	113.88	2.56	75.82	78.38	113.88	✓
K307	7.86	133.28	98.53	133.28	98.53	15.20	41.29	56.59	65.75	15.29	41.29	56.58	65.75	✓
K308	7.45	117.97	89.42	134.95	89.42	14.71	39.00	53.71	75.86	24.67	42.19	66.86	75.86	✓
K311	7.10	141.56	89.42	124.84	89.42	24.66	45.58	70.23	75.86	14.74	42.28	57.02	75.86	✓
K312	4.01	70.34	61.11	70.34	61.11	7.14	45.89	53.03	89.66	7.14	45.89	53.03	89.66	✓
K313	4.01	79.78	78.72	79.78	70.72	6.80	52.54	59.34	89.66	6.80	52.54	59.34	89.66	✓
K314	7.81	102.57	80.15	102.57	80.15	12.80	32.75	45.55	89.66	12.79	32.75	45.55	89.66	✓
K315	6.47	165.38	107.47	157.60	98.53	22.41	57.10	79.52	89.66	25.10	57.36	82.45	89.66	✓
K316	6.38	157.60	124.84	89.42	70.72	12.80	50.10	62.90	75.86	15.70	47.02	62.72	75.86	✓
K317	6.38	89.42	70.72	157.60	124.84	15.70	47.02	62.71	89.66	12.81	50.10	62.91	89.66	✓
K318	6.47	157.60	98.53	165.38	107.47	25.07	57.36	82.43	89.66	22.44	57.10	79.54	89.66	✓
K319	7.45	133.28	107.47	141.56	107.47	14.22	46.27	59.49	70.45	15.13	46.83	61.96	70.45	✓
K320	7.15	141.56	107.47	133.28	107.47	15.13	48.79	63.92	70.45	14.21	47.17	61.39	70.45	✓
K321	3.07	111.29	102.38	111.29	102.38	5.35	97.44	102.79	113.88	4.56	97.44	102.01	113.88	✓
K322	3.07	111.29	102.38	111.29	102.38	4.57	97.44	102.01	113.88	5.35	97.44	102.79	113.88	✓
K323	5.78	180.43	141.56	172.99	149.66	12.05	79.95	93.00	98.62	9.81	76.19	85.99	98.62	✓
K324	5.78	172.99	149.66	180.43	141.56	9.81	76.19	86.00	98.62	13.05	79.95	93.00	98.62	✓
K325	3.50	149.66	124.84	141.56	116.24	2.15	106.36	108.51	128.87	10.05	106.56	116.61	128.87	✓
K326	7.40	157.60	107.47	149.66	124.84	17.18	52.47	70.65	75.86	15.94	48.68	64.61	75.86	✓
K329	3.64	157.60	133.28	149.66	116.24	6.41	105.47	111.88	128.87	16.02	108.98	124.99	128.87	✓
K330	3.77	149.66	141.56	157.60	133.28	6.76	105.07	111.84	128.87	14.92	111.09	126.01	128.87	✓
K332	7.02	109.23	133.28	151.26	124.84	14.69	46.68	61.38	82.19	17.20	56.75	73.95	82.19	✓
K333	2.75	126.55	98.53	109.23	98.53	13.62	114.38	128.00	128.87	0.15	105.58	105.72	128.87	✓
K334	1.20	9.30	9.16	9.30	9.16	1.14	21.54	22.68	37.27	1.40	21.54	22.94	37.27	✓
K336	4.21	149.66	124.84	149.66	116.24	16.12	88.53	104.65	128.87	14.78	91.39	106.17	128.87	✓
K337	3.74	149.66	133.28	149.66	124.84	8.85	102.62	111.47	128.87	16.08	105.77	121.85	128.87	✓
K340	1.20	9.30	9.16	9.30	9.16	1.13	21.54	22.67	37.27	1.39	21.54	22.93	37.27	✓
K342	7.02	109.23	133.28	151.26	124.84	14.65	46.68	61.33	82.19	17.20	56.75	73.94	82.19	✓
K343	2.75	117.97	98.53	109.23	98.53	13.61	110.02	123.63	128.87	0.08	105.58	105.66	128.87	✓
K344	3.64	157.60	133.28	149.66	116.24	6.41	105.47	111.88	128.87	16.02	108.98	125.00	128.87	✓
K345	3.77	149.66	141.56	157.60	133.28	6.78	105.07	111.85	128.87	14.84	111.09	126.03	128.87	✓
K348	3.50	149.66	124.84	141.56	116.24	2.14	106.36	108.50	128.87	10.06	106.56	116.62	128.87	✓
K349	7.40	157.60	107.47	149.66	124.84	17.17	52.47	70.65	75.86	15.94	48.68	64.62	75.86	✓
K401	1.55	82.02	61.11	126.55	141.56	8.91	201.94	210.85	189.20	5.83	169.50	175.32	189.20	✗
K402	3.00	111.29	124.20	111.29	109.82	5.81	103.02	108.82	113.88	3.40	109.72	113.12	113.88	✓
K403	3.00	111.29	109.82	111.29	124.20	3.45	109.72	113.17	113.88	5.76	103.02	108.78	113.88	✓
K404	1.55	126.55	141.56	82.02	61.11	5.72	169.50	175.22	189.20	8.80	201.94	210.74	189.20	✗
K405	3.10	88.56	87.00	96.31	79.05	1.83	75.82	77.65	113.88	9.66	82.92	92.58	113.88	✓
K406	3.10	96.31	79.05	88.56	87.00	9.60	82.92	92.52	113.88	1.87	75.82	77.69	113.88	✓
K407	7.86	141.56	107.47	141.56	107.47	15.00	44.36	59.36	65.75	14.99	44.36	59.35	65.75	✓
K408	7.45	117.97	89.42	134.95	89.42	14.08	39.00	53.08	75.86	24.31	42.19	66.51	75.86	✓
K411	7.10	141.56	89.42	124.84	89.42	24.20	45.58	69.88	75.86	14.11	42.28	56.39	75.86	✓
K412	4.01	70.34	61.11	70.34	61.11	7.14	45.89	53.03	89.66	7.14	45.89	53.03	89.66	✓
K413	4.01	70.34	61.11	70.34	61.11	6.79	45.89	52.69	89.66	6.80	45.89	52.69	89.66	✓
K414	7.81	103.55	80.15	103.55	80.15	12.73	32.92	45.66	75.86	12.72	32.93	45.65	75.86	✓
K415	6.47	165.38	107.47	157.60	107.47	22.62	59.04	81.66	89.66	24.89	57.36	82.25	89.66	✓
K416	6.38	157.60	141.56	89.42	80.15	12.71	52.17	64.88	75.86	15.89	50.69	66.58	75.86	✓
K417	6.38	89.42	80.15	157.60	141.56	15.88	50.69	66.57	89.66	12.72	52.17	64.89	89.66	✓
K418	6.47	157.60	107.47	165.38	107.47	24.87	57.36	82.22	89.66	22.64	59.04	81.68	89.66	✓
K419	7.45	141.56	107.47	141.56	107.47	14.09	46.83	60.92	70.45	14.63	46.83	61.45	70.45	✓
K420	7.15	141.56	107.47	141.56	107.47	14.62	48.79	63.42	70.45	14.05	48.79	62.89	70.45	✓
K421	3.07	111.29	102.38	111.29	102.38	5.51	97.44	102.95	113.88	4.41	97.44	101.85	113.88	✓
K422	3.07	111.29	102.38	111.29	102.38	4.41	97.44	101.85	113.88	5.51	97.44	102.95	113.88	✓
K423	5.78	187.70	149.66	180.43	157.60	13.50	83.64	97.14	98.62	9.36	79.95	89.31	98.62	✓
K424	5.78	180.43	157.60	187.70	149.66	9.36	79.95	89.32	98.62	13.50	83.64	97.13	98.62	✓
K425	3.50	157.60	124.84	141.56	116.24	1.16	109.54	110.69	128.87	11.04	106.56	117.60	128.87	✓
K426	7.40	165.38	116.24	157.60	124.84	17.27	54.94	72.21	75.86	15.75	51.84	67.59	75.86	✓
K429	3.64	165.38	133.28	157.60	116.24	4.99	108.46	113.45	138.07	17.44	112.03	129.48	138.07	✓
K430	3.77	157.60	149.66	165.38	133.28	6.06	108.02	114.08	138.07	15.62	116.99	132.61	138.07	✓
K432	7.02	117.97	149.66	151.26	133.28	15.49	50.11	65.60	82.19	16.63	60.01	76.65	82.19	✓
K433	2.75	126.55	89.42	117.97	107.47	15.66	118.92	134.58	138.07	2.19	105.39	107.58	138.07	✓
K434	1.20	8.80	9.16	8.80	9.16	1.13	20.95	22.08	37.27	1.41	20.95	22.37	37.27	✓
K436	4.21	157.60	124.84	157.60	124.84	15.64	94.04	109.68	128.87	15.26	94.04	109.29	128.87	✓
K437	3.74	149.66	133.28	157.60	124.84	8.67	102.62	111.29	128.87	16.26	108.74	125.00	128.87	✓
K440	1.20	8.80	9.16	8.80	9.16	1.12	20.95	22.07	37.27	1.40	20.95	22.35	37.27	✓
K442	7.02	117.97	149.66	151.26	133.28	15.44	50.11	65.55	82.19	16.63	60.01	76.64	82.19	✓
K443	2.75	126.55	89.42	117.97	107.47	15.64	118.92	134.56	138.07	2.11	105.39	107.51	138.07	✓
K444	3.64	165.38	133.28	157.60	116.24	4.98	108.46	113.45	138.07	17.45	112.03	129.48	138.07	✓
K445	3.77	157.60	149.66	165.38	133.28	6.08	108.02	114.10	138.07	15.64	116.99	132.63	138.07	✓
K448	3.50	157.60	124.84	141.56	116.24	1.15	109.54	110.68	128.87	11.05	106.56	117.62	128.87	✓
K449	7.40	165.38	116.24	157.60	124.84	17.26	54.94	72.20	75.86	15.76	51.84	67.60	75.86	✓
K501	1.55	82.02	61.11	126.55	149.66	10.23	209.26	219.59	189.20	7.25	169.50	176.74	189.20	✗
K502	3.00	111.29	131.14	111.29	109.82	6.01	103.02	109.02	122.02	3.21	112.95	116.15	122.02	✓
K503	3.00	111.29	109.82	111.29	131.14	3.26	112.95	116.21	122.02	6.95	103.02	109.97	122.02	✓
K504	1.55	126.55	149.66	82.02	61.11	7.12	169.50	176.62	189.20	10.20	209.26	219.47	189.20	✗
K505	3.10	80.65	87.00	96.31	79.05	1.20	72.24	73.44	113.88	10.29	82.92	93.21	113.88	✓
K506	3.10	96.31	79.05	80.65	87.00	10.21	82.92	93.13	113.88	1.26	72.24	73.50	113.88	✓
K507	7.86	141.56	107.47	141.56	107.47	14.74	44.36	59.10	65.75	14.73	44.36	59.09	65.75	✓
K508	7.45	117.97	89.42	134.95	89.42	13.50	39.00	52.50	75.86	23.89	42.19	66.19	75.86	✓

STAA-CAD V11

FİRMA : | 03-23-2005

PROJE : kolonlukirişlisistem (kolonlukirişlisistem_ST4)

TEMELLERE GELEN KOLON YÜKLERİ

S101	GGGGGG	QQQQQQ	Q_Q_Q_	_Q_Q_Q	QQ_QQ_	_QQ_QQ	Q_QQ_Q	Zemin
N	1947.96	112.06	(azaltma	Nq=	186.76x0.600 =	112.06)		0.00
Alt Mx	0.73	0.11	0.15	-0.05	-0.02	0.15	0.08	0.00
Alt My	1.17	0.10	0.18	-0.07	-0.04	0.12	0.14	0.00
	Deprem+X	Deprem-X	Deprem+Y	Deprem-Y	Rüzgar+X	Rüzgar-X	Rüzgar+Y	Rüzgar-Y
N	-684.54	-714.26	-935.83	-900.46	-107.10	-112.32	-171.92	-164.58
Alt Mx	289.30	252.63	39.06	-37.33	56.56	69.26	9.25	-8.81
Alt My	50.94	-10.18	445.26	517.94	11.29	-0.67	106.52	123.68

S102	GGGGGG	QQQQQQ	Q_Q_Q_	_Q_Q_Q	QQ_QQ_	_QQ_QQ	Q_QQ_Q	Zemin
N	1028.15	61.32	(azaltma	Nq=	102.20x0.600 =	61.32)		0.00
Alt Mx	-0.97	-0.14	-0.14	0.00	-0.12	-0.12	-0.05	0.00
Alt My	-0.90	-0.13	-0.16	-0.02	-0.03	-0.18	-0.13	0.00
	Deprem+X	Deprem-X	Deprem+Y	Deprem-Y	Rüzgar+X	Rüzgar-X	Rüzgar+Y	Rüzgar-Y
N	-115.59	-89.84	-646.59	-677.16	-15.68	-10.48	-128.82	-136.16
Alt Mx	179.82	210.94	24.61	-23.02	33.36	41.34	5.82	-5.43
Alt My	5.25	-0.95	78.77	86.26	1.19	-0.07	18.91	20.68

S103	GGGGGG	QQQQQQ	Q_Q_Q_	_Q_Q_Q	QQ_QQ_	_QQ_QQ	Q_QQ_Q	Zemin
N	1228.16	73.88	(azaltma	Nq=	123.13x0.600 =	73.88)		0.00
Alt Mx	0.00	0.00	0.11	-0.11	0.11	-0.02	-0.09	0.00
Alt My	-2.81	-0.49	-0.60	0.10	0.06	-0.61	-0.44	0.00
	Deprem+X	Deprem-X	Deprem+Y	Deprem-Y	Rüzgar+X	Rüzgar-X	Rüzgar+Y	Rüzgar-Y
N	0.80	0.83	-668.63	-688.87	0.12	0.13	-133.92	-133.93
Alt Mx	149.85	185.54	21.28	-21.10	29.27	36.37	5.04	-4.98
Alt My	-0.02	0.01	156.20	156.16	0.00	0.00	37.41	37.40

S104	GGGGGG	QQQQQQ	Q_Q_Q_	_Q_Q_Q	QQ_QQ_	_QQ_QQ	Q_QQ_Q	Zemin
N	1029.51	61.41	(azaltma	Nq=	102.35x0.600 =	61.41)		0.00
Alt Mx	0.97	0.14	0.03	0.11	0.03	0.15	0.11	0.00
Alt My	-0.90	-0.18	-0.17	-0.01	-0.05	-0.17	-0.13	0.00
	Deprem+X	Deprem-X	Deprem+Y	Deprem-Y	Rüzgar+X	Rüzgar-X	Rüzgar+Y	Rüzgar-Y
N	117.32	91.62	-678.16	-697.67	15.95	10.76	-136.36	-129.05
Alt Mx	179.82	210.93	23.23	-24.40	33.36	41.34	5.50	-5.75
Alt My	-5.36	0.97	86.20	78.78	-1.19	0.07	20.69	18.92

S105	GGGGGG	QQQQQQ	Q_Q_Q_	_Q_Q_Q	QQ_QQ_	_QQ_QQ	Q_QQ_Q	Zemin
N	1919.47	110.50	(azaltma	Nq=	184.16x0.600 =	110.50)		0.00
Alt Mx	-0.72	-0.11	0.05	-0.15	-0.13	-0.10	0.02	0.00
Alt My	1.07	0.09	0.27	-0.18	-0.12	0.16	0.15	0.00
	Deprem+X	Deprem-X	Deprem+Y	Deprem-Y	Rüzgar+X	Rüzgar-X	Rüzgar+Y	Rüzgar-Y
N	677.32	706.85	-889.25	-924.39	106.01	111.20	-162.61	-169.92
Alt Mx	294.55	247.93	27.09	-38.17	55.63	68.24	8.78	-9.01
Alt My	-48.60	9.79	493.72	424.28	-10.78	0.85	117.93	101.54

S106	GGGGGG	QQQQQQ	Q_Q_Q_	_Q_Q_Q	QQ_QQ_	_QQ_QQ	Q_QQ_Q	Zemin
N	1084.65	59.82	(azaltma	Nq=	99.69x0.600 =	59.82)		0.00
Alt Mx	-0.44	-0.07	-0.11	0.05	0.05	-0.10	-0.07	0.00
Alt My	-2.51	-0.33	-0.40	0.06	0.02	-0.42	-0.29	0.00
	Deprem+X	Deprem-X	Deprem+Y	Deprem-Y	Rüzgar+X	Rüzgar-X	Rüzgar+Y	Rüzgar-Y
N	-793.74	-828.77	-563.87	-542.20	-132.23	-138.58	-113.12	-104.17
Alt Mx	124.93	150.50	14.65	-15.71	24.48	29.57	3.47	-3.71
Alt My	17.16	-4.95	92.70	118.99	3.84	-0.57	22.25	28.46

S107	GGGGGG	QQQQQQ	Q_Q_Q_	_Q_Q_Q	QQ_QQ_	_QQ_QQ	Q_QQ_Q	Zemin
N	1026.59	59.95	(azaltma	Nq=	99.92x0.600 =	59.95)		0.00
Alt Mx	0.44	0.07	-0.04	0.10	0.10	0.07	-0.05	0.00
Alt My	-2.50	-0.33	-0.41	0.07	0.04	-0.40	-0.32	0.00
	Deprem+X	Deprem-X	Deprem+Y	Deprem-Y	Rüzgar+X	Rüzgar-X	Rüzgar+Y	Rüzgar-Y
N	754.56	830.08	-543.67	-585.44	132.41	138.77	-104.42	-113.40
Alt Mx	124.93	150.50	15.84	-14.52	24.48	29.57	3.75	-3.43
Alt My	-17.18	5.00	119.12	92.76	-3.84	0.57	28.50	22.28

S108	GGGGGG	QQQQQQ	Q_Q_Q_	_Q_Q_Q	QQ_QQ_	_QQ_QQ	Q_QQ_Q	Zemin
N	1325.08	87.75	(azaltma	Nq=	148.61x0.611 =	87.75)		0.00
Alt Mx	-3.98	-0.71	-0.86	0.15	0.12	-0.85	-0.69	0.00
Alt My	-1.63	-0.32	0.24	-0.56	-0.44	0.17	-0.27	0.00
	Deprem+X	Deprem-X	Deprem+Y	Deprem-Y	Rüzgar+X	Rüzgar-X	Rüzgar+Y	Rüzgar-Y
N	-92.40	-106.85	-55.25	-38.05	-9.79	-12.26	3.44	7.07
Alt Mx	152.83	176.68	10.21	-16.92	30.28	34.83	2.39	-4.02
Alt My	7.19	-6.39	163.42	179.54	1.68	-1.02	39.18	42.98

S109	GGGGGG	QQQQQQ	Q_Q_Q_	_Q_Q_Q	QQ_QQ_	_QQ_QQ	Q_QQ_Q	Zemin
N	1326.17	87.78	(azaltma	Nq=	148.67x0.611 =	87.78)		0.00
Alt Mx	3.98	0.71	0.85	-0.14	-0.10	0.84	0.68	0.00
Alt My	-1.61	-0.31	0.28	-0.60	-0.47	0.19	-0.25	0.00
	Deprem+X	Deprem-X	Deprem+Y	Deprem-Y	Rüzgar+X	Rüzgar-X	Rüzgar+Y	Rüzgar-Y
N	93.65	108.15	-38.76	-56.04	9.97	12.56	6.94	3.29
Alt Mx	152.83	176.68	17.04	-10.09	30.28	34.83	4.06	-2.35
Alt My	-7.23	6.41	179.64	163.45	-1.69	1.03	43.02	39.19

S110	GGGGGG	QQQQQQ	Q_Q_Q_	_Q_Q_Q	QQ_QQ_	_QQ_QQ	Q_QQ_Q	Zemin
N	1426.14	87.36	(azaltma	Nq=	145.36x0.601 =	87.36)		0.00
Alt Mx	-2.84	-0.41	-0.57	0.17	0.13	-0.56	-0.37	0.00
Alt My	-4.17	-0.63	-0.79	0.18	0.11	-0.80	-0.54	0.00
	Deprem+X	Deprem-X	Deprem+Y	Deprem-Y	Rüzgar+X	Rüzgar-X	Rüzgar+Y	Rüzgar-Y
N	-996.50	-1011.84	-307.12	-288.86	-160.24	-162.97	-55.87	-52.02
Alt Mx	156.72	206.95	8.83	-15.14	36.85	40.91	2.09	-3.58
Alt My	33.58	-7.70	128.68	177.71	7.47	-0.75	30.87	42.46

STAA-99 V11

FİRMA : | 03-23-2005

PROJE : kolonlukirişlisistem (kolonlukirişlisistem.ST4)

TEMELLERE GELEN KOLON YÜKLERİ

S111	GGGGGG	QQQQQQ	Q Q Q	Q Q Q	QQ QQ	QQ QQ	Q QQ Q	Zemin
N	1615.18	106.67	(azaltma	Nq=	176.22x0.605 =	106.67)		0.00
Alt Mx	3.70	0.63	1.11	-0.48	-0.34	1.08	0.52	0.00
Alt My	-0.11	-0.04	0.06	-0.11	-0.08	0.03	-0.05	0.00
	Deprem+X	Deprem-X	Deprem+Y	Deprem-Y	Rüzgar+X	Rüzgar-X	Rüzgar+Y	Rüzgar-Y
N	-437.39	-480.59	-50.50	0.38	-68.04	-75.92	1.32	12.42
Alt Mx	221.52	245.38	14.29	-13.95	43.79	48.52	3.38	-3.29
Alt My	17.15	-4.46	156.25	181.90	3.82	-0.48	37.42	42.49

S112	GGGGGG	QQQQQQ	Q Q Q	Q Q Q	QQ QQ	QQ QQ	Q QQ Q	Zemin
N	1616.34	106.70	(azaltma	Nq=	176.37x0.605 =	106.70)		0.00
Alt Mx	-3.69	-0.63	-1.22	0.59	0.45	-1.11	-0.60	0.00
Alt My	-0.10	-0.04	0.08	-0.13	-0.09	0.05	-0.06	0.00
	Deprem+X	Deprem-X	Deprem+Y	Deprem-Y	Rüzgar+X	Rüzgar-X	Rüzgar+Y	Rüzgar-Y
N	438.47	481.72	-0.04	-51.47	68.20	76.08	12.27	1.16
Alt Mx	221.52	245.31	14.07	-14.17	43.79	48.52	3.32	-3.34
Alt My	-17.19	4.48	182.05	156.23	-3.83	0.48	42.53	37.45

S113	GGGGGG	QQQQQQ	Q Q Q	Q Q Q	QQ QQ	QQ QQ	Q QQ Q	Zemin
N	1429.95	87.49	(azaltma	Nq=	145.57x0.601 =	87.49)		0.00
Alt Mx	2.85	0.41	0.57	-0.16	-0.11	0.55	0.37	0.00
Alt My	-4.17	-0.60	-0.76	0.15	0.10	-0.77	-0.56	0.00
	Deprem+X	Deprem-X	Deprem+Y	Deprem-Y	Rüzgar+X	Rüzgar-X	Rüzgar+Y	Rüzgar-Y
N	997.83	1012.72	-289.96	-308.28	160.36	163.09	-52.21	-56.06
Alt Mx	186.72	206.95	15.24	-8.78	26.89	40.91	3.61	-2.06
Alt My	-32.62	7.72	177.95	128.86	-7.48	0.75	42.53	30.93

S114	GGGGGG	QQQQQQ	Q Q Q	Q Q Q	QQ QQ	QQ QQ	Q QQ Q	Zemin
N	575.32	41.05	(azaltma	Nq=	68.42x0.600 =	41.05)		0.00
Alt Mx	-1.00	-0.18	-0.25	0.06	0.05	-0.24	-0.17	0.00
Alt My	0.01	-0.01	0.00	0.00	0.00	-0.01	-0.01	0.00
	Deprem+X	Deprem-X	Deprem+Y	Deprem-Y	Rüzgar+X	Rüzgar-X	Rüzgar+Y	Rüzgar-Y
N	-280.04	-293.87	-124.64	-108.22	-51.13	-53.76	-27.19	-23.48
Alt Mx	51.42	56.05	2.76	-2.74	10.21	11.13	0.65	-0.65
Alt My	1.54	-0.31	37.04	39.24	0.34	-0.03	8.88	9.40

S115	GGGGGG	QQQQQQ	Q Q Q	Q Q Q	QQ QQ	QQ QQ	Q QQ Q	Zemin
N	575.41	41.04	(azaltma	Nq=	68.40x0.600 =	41.04)		0.00
Alt Mx	1.00	0.18	0.24	-0.06	-0.04	0.24	0.17	0.00
Alt My	0.01	-0.01	0.00	0.00	0.00	-0.01	-0.01	0.00
	Deprem+X	Deprem-X	Deprem+Y	Deprem-Y	Rüzgar+X	Rüzgar-X	Rüzgar+Y	Rüzgar-Y
N	280.07	293.89	-108.22	-124.74	51.13	53.76	-23.49	-27.20
Alt Mx	51.42	56.05	2.76	-2.74	10.21	11.13	0.65	-0.65
Alt My	-1.55	0.31	39.25	37.04	-0.34	0.03	9.40	8.88

S116	GGGGGG	QQQQQQ	Q Q Q	Q Q Q	QQ QQ	QQ QQ	Q QQ Q	Zemin
N	574.29	40.58	(azaltma	Nq=	67.62x0.600 =	40.58)		0.00
Alt Mx	-0.94	-0.16	-0.22	0.06	0.04	-0.21	-0.15	0.00
Alt My	0.27	0.04	0.05	-0.02	-0.01	0.05	0.02	0.00
	Deprem+X	Deprem-X	Deprem+Y	Deprem-Y	Rüzgar+X	Rüzgar-X	Rüzgar+Y	Rüzgar-Y
N	-291.49	-304.54	108.78	124.29	-53.46	-55.95	23.59	27.10
Alt Mx	53.98	56.66	1.60	-1.58	10.76	11.29	0.38	-0.37
Alt My	1.54	-0.31	37.04	39.24	0.34	-0.03	8.88	9.40

S117	GGGGGG	QQQQQQ	Q Q Q	Q Q Q	QQ QQ	QQ QQ	Q QQ Q	Zemin
N	574.38	40.57	(azaltma	Nq=	67.61x0.600 =	40.57)		0.00
Alt Mx	0.94	0.16	0.21	-0.05	-0.03	0.21	0.15	0.00
Alt My	0.27	0.04	0.05	-0.02	-0.01	0.05	0.02	0.00
	Deprem+X	Deprem-X	Deprem+Y	Deprem-Y	Rüzgar+X	Rüzgar-X	Rüzgar+Y	Rüzgar-Y
N	291.45	304.50	124.19	108.68	53.46	55.95	27.09	23.58
Alt Mx	53.98	56.66	1.60	-1.58	10.76	11.29	0.38	-0.37
Alt My	-1.55	0.31	39.25	37.04	-0.34	0.03	9.40	8.88

S118	GGGGGG	QQQQQQ	Q Q Q	Q Q Q	QQ QQ	QQ QQ	Q QQ Q	Zemin
N	1765.23	117.88	(azaltma	Nq=	195.49x0.603 =	117.88)		0.00
Alt Mx	-2.21	-0.37	-0.43	0.05	0.05	-0.42	-0.37	0.00
Alt My	2.56	0.56	-0.06	0.59	0.43	-0.05	0.68	0.00
	Deprem+X	Deprem-X	Deprem+Y	Deprem-Y	Rüzgar+X	Rüzgar-X	Rüzgar+Y	Rüzgar-Y
N	-239.54	-223.51	-336.49	-355.56	-38.40	-35.47	-69.42	-73.55
Alt Mx	232.57	234.12	2.04	1.38	46.59	46.70	0.49	0.34
Alt My	14.36	-2.41	217.21	237.71	3.29	-0.15	52.00	56.85

S119	GGGGGG	QQQQQQ	Q Q Q	Q Q Q	QQ QQ	QQ QQ	Q QQ Q	Zemin
N	1765.56	117.83	(azaltma	Nq=	195.41x0.602 =	117.83)		0.00
Alt Mx	2.21	0.27	0.46	-0.09	-0.06	0.45	0.36	0.00
Alt My	2.56	0.56	-0.29	0.82	0.60	-0.26	0.71	0.00
	Deprem+X	Deprem-X	Deprem+Y	Deprem-Y	Rüzgar+X	Rüzgar-X	Rüzgar+Y	Rüzgar-Y
N	240.04	224.02	-355.77	-336.73	38.37	35.55	-73.59	-69.46
Alt Mx	232.57	234.13	-1.38	-2.04	46.60	46.70	-0.34	-0.49
Alt My	-14.93	2.43	237.84	217.25	-3.30	0.15	56.88	52.02

S120	GGGGGG	QQQQQQ	Q Q Q	Q Q Q	QQ QQ	QQ QQ	Q QQ Q	Zemin
N	1718.15	109.94	(azaltma	Nq=	181.72x0.605 =	109.94)		0.00
Alt Mx	-4.25	-0.81	-1.13	0.33	0.23	-1.11	-0.71	0.00
Alt My	4.36	0.62	0.92	-0.32	-0.22	0.87	0.53	0.00
	Deprem+X	Deprem-X	Deprem+Y	Deprem-Y	Rüzgar+X	Rüzgar-X	Rüzgar+Y	Rüzgar-Y
N	-1112.23	-1012.97	-172.45	-290.60	-182.35	-164.08	-42.27	-68.01
Alt Mx	242.23	230.53	-8.75	7.13	48.56	46.23	-1.61	1.68
Alt My	50.69	-10.76	191.29	264.26	11.26	-0.98	45.92	63.17

STAA-CAD V11

FİRMA : | 03-23-2005

PROJE : kolonlukirişlisistem (kolonlukirişlisistem.ST4)

TEMELLERE GELEN KOLON YÜKLERİ

S121	GGGGGG	QQQQQQ	Q Q Q	Q Q Q	QQ QQ	QQ QQ	Q QQ Q	Zemin
N	1924.41	139.85	(azaltma	Nq=	215.92x0.606	= 130.85)		0.00
Alt Mx	3.10	0.70	1.35	-0.64	-0.46	1.31	0.58	0.00
Alt My	-0.69	-0.12	-0.16	0.01	0.02	-0.19	-0.14	0.00
	Deprem+X	Deprem-X	Deprem+Y	Deprem-Y	Rüzgar+X	Rüzgar-X	Rüzgar+Y	Rüzgar-Y
N	-351.21	-303.13	-294.69	-351.84	-54.90	-46.01	-67.32	-79.85
Alt Mx	291.21	277.65	-12.21	3.80	58.37	55.66	-2.94	0.88
Alt My	25.85	-6.86	238.38	277.22	5.77	-0.74	57.13	66.32

S122	GGGGGG	QQQQQQ	Q Q Q	Q Q Q	QQ QQ	QQ QQ	Q QQ Q	Zemin
N	1882.86	119.29	(azaltma	Nq=	196.82x0.600	= 119.29)		0.00
Alt Mx	0.00	0.00	-0.33	0.32	0.24	-0.31	0.07	0.00
Alt My	-0.09	-0.12	-0.11	-0.01	-0.01	-0.13	-0.11	0.00
	Deprem+X	Deprem-X	Deprem+Y	Deprem-Y	Rüzgar+X	Rüzgar-X	Rüzgar+Y	Rüzgar-Y
N	0.16	0.16	-164.07	-164.07	0.02	0.02	-38.02	-38.02
Alt Mx	289.66	275.60	-8.39	8.31	58.06	55.25	-1.99	1.97
Alt My	-0.03	0.02	261.40	261.34	-0.01	0.00	62.59	62.58

S123	GGGGGG	QQQQQQ	Q Q Q	Q Q Q	QQ QQ	QQ QQ	Q QQ Q	Zemin
N	1924.95	130.84	(azaltma	Nq=	215.92x0.606	= 130.84)		0.00
Alt Mx	-3.10	-0.70	-0.92	0.21	0.16	-0.91	-0.67	0.00
Alt My	-0.69	-0.12	-0.19	0.04	0.05	-0.21	-0.14	0.00
	Deprem+X	Deprem-X	Deprem+Y	Deprem-Y	Rüzgar+X	Rüzgar-X	Rüzgar+Y	Rüzgar-Y
N	351.53	303.46	-352.05	-294.91	54.95	46.06	-79.90	-67.37
Alt Mx	291.21	277.65	-3.87	12.22	58.37	55.66	-0.90	2.92
Alt My	-25.91	6.85	277.45	238.50	-5.79	0.74	66.38	57.17

S124	GGGGGG	QQQQQQ	Q Q Q	Q Q Q	QQ QQ	QQ QQ	Q QQ Q	Zemin
N	1719.49	110.03	(azaltma	Nq=	181.87x0.605	= 110.03)		0.00
Alt Mx	4.25	0.81	1.07	-0.27	-0.18	1.05	0.72	0.00
Alt My	4.37	0.62	0.97	-0.37	-0.23	0.92	0.50	0.00
	Deprem+X	Deprem-X	Deprem+Y	Deprem-Y	Rüzgar+X	Rüzgar-X	Rüzgar+Y	Rüzgar-Y
N	1112.62	1013.26	-291.14	-172.99	162.39	164.12	-68.13	-42.38
Alt Mx	242.23	230.53	-7.19	6.69	48.56	46.23	-1.78	1.59
Alt My	-50.75	19.79	264.62	191.56	-11.27	0.98	63.25	46.01

S125	GGGGGG	QQQQQQ	Q Q Q	Q Q Q	QQ QQ	QQ QQ	Q QQ Q	Zemin
N	1463.56	87.77	(azaltma	Nq=	146.29x0.600	= 87.77)		0.00
Alt Mx	-3.85	-0.39	-0.51	0.12	0.06	-0.56	-0.28	0.00
Alt My	2.04	0.27	0.09	0.16	0.13	0.08	0.29	0.00
	Deprem+X	Deprem-X	Deprem+Y	Deprem-Y	Rüzgar+X	Rüzgar-X	Rüzgar+Y	Rüzgar-Y
N	-923.27	-942.95	528.71	552.03	-147.42	-151.65	105.46	111.43
Alt Mx	220.12	193.35	-12.54	19.25	44.43	39.10	-2.96	4.57
Alt My	42.59	-8.71	159.49	220.40	9.45	-0.76	38.30	52.70

S126	GGGGGG	QQQQQQ	Q Q Q	Q Q Q	QQ QQ	QQ QQ	Q QQ Q	Zemin
N	1700.73	112.80	(azaltma	Nq=	185.83x0.607	= 112.80)		0.00
Alt Mx	3.81	0.51	0.65	-0.13	-0.08	0.67	0.45	0.00
Alt My	1.86	0.28	0.70	-0.47	-0.30	0.66	0.11	0.00
	Deprem+X	Deprem-X	Deprem+Y	Deprem-Y	Rüzgar+X	Rüzgar-X	Rüzgar+Y	Rüzgar-Y
N	-28.47	-49.26	233.06	257.77	5.86	1.98	36.66	42.12
Alt Mx	257.38	226.33	-20.46	16.40	51.94	45.76	-4.87	3.86
Alt My	24.75	-5.40	217.92	252.72	5.51	-0.50	52.29	60.76

S127	GGGGGG	QQQQQQ	Q Q Q	Q Q Q	QQ QQ	QQ QQ	Q QQ Q	Zemin
N	1853.35	126.24	(azaltma	Nq=	208.67x0.605	= 126.24)		0.00
Alt Mx	0.00	0.00	-0.04	0.04	0.02	-0.04	0.02	0.00
Alt My	0.58	0.02	0.63	-0.84	-0.59	0.74	-0.18	0.00
	Deprem+X	Deprem-X	Deprem+Y	Deprem-Y	Rüzgar+X	Rüzgar-X	Rüzgar+Y	Rüzgar-Y
N	0.00	-0.01	414.92	414.93	0.00	0.00	76.22	76.23
Alt Mx	228.69	200.81	-16.62	16.48	46.13	40.58	-3.94	3.89
Alt My	-0.03	0.02	269.42	269.37	-0.01	0.00	64.56	64.54

S128	GGGGGG	QQQQQQ	Q Q Q	Q Q Q	QQ QQ	QQ QQ	Q QQ Q	Zemin
N	1701.24	112.88	(azaltma	Nq=	185.84x0.607	= 112.88)		0.00
Alt Mx	-3.81	-0.51	-0.69	0.17	0.12	-0.72	-0.44	0.00
Alt My	1.87	0.28	0.73	-0.50	-0.31	0.69	0.10	0.00
	Deprem+X	Deprem-X	Deprem+Y	Deprem-Y	Rüzgar+X	Rüzgar-X	Rüzgar+Y	Rüzgar-Y
N	28.48	49.24	257.52	232.84	-5.85	-1.98	42.08	36.62
Alt Mx	257.28	226.33	-16.56	20.30	51.94	45.76	-3.91	4.82
Alt My	-24.81	5.42	253.92	218.02	-5.52	0.50	60.82	52.33

S129	GGGGGG	QQQQQQ	Q Q Q	Q Q Q	QQ QQ	QQ QQ	Q QQ Q	Zemin
N	1464.66	87.84	(azaltma	Nq=	146.40x0.600	= 87.84)		0.00
Alt Mx	3.05	0.39	0.46	-0.08	-0.03	0.51	0.29	0.00
Alt My	2.05	0.27	0.13	0.12	0.12	0.12	0.26	0.00
	Deprem+X	Deprem-X	Deprem+Y	Deprem-Y	Rüzgar+X	Rüzgar-X	Rüzgar+Y	Rüzgar-Y
N	923.24	942.98	551.43	528.13	147.42	151.65	111.34	105.37
Alt Mx	220.12	193.35	-19.39	12.41	44.43	39.10	-4.61	2.91
Alt My	-42.64	8.73	220.70	159.71	-9.46	0.77	52.79	28.37

S130	GGGGGG	QQQQQQ	Q Q Q	Q Q Q	QQ QQ	QQ QQ	Q QQ Q	Zemin
N	1265.87	73.97	(azaltma	Nq=	123.28x0.600	= 73.97)		0.00
Alt Mx	-0.66	-0.09	-0.18	0.09	0.06	-0.15	-0.09	0.00
Alt My	3.11	0.38	0.22	0.14	0.17	0.28	0.17	0.00
	Deprem+X	Deprem-X	Deprem+Y	Deprem-Y	Rüzgar+X	Rüzgar-X	Rüzgar+Y	Rüzgar-Y
N	-756.69	-761.80	802.19	772.41	-133.35	-128.37	155.27	148.25
Alt Mx	195.51	160.81	-20.68	20.76	39.69	32.74	-4.90	4.91
Alt My	27.86	-4.69	127.10	175.76	6.16	-0.32	32.89	42.03

STAA-CAD V11

FİRMA : 03-23-2005

PROJE : kolonlukirişlisistem (kolonlukirişlisistem.ST4)

TEMELLERE GELEN KOLON YÜKLERİ

S131	GGGGGG	QQQQQQ	Q Q Q	Q Q Q	QQ QQ	QQ QQ	Q QQ Q	Zemin
N	1266.54	74.00	(azaltma	Nq=	123.33x0.600 =	74.00)		0.00
Alt Mx	0.65	0.09	-0.02	0.11	-0.03	0.09	0.12	0.00
Alt My	3.12	0.38	0.28	0.08	0.16	0.41	0.16	0.00
	Deprem+X	Deprem-X	Deprem+Y	Deprem-Y	Rüzgar+X	Rüzgar-X	Rüzgar+Y	Rüzgar-Y
N	786.45	761.33	771.98	801.81	133.31	128.22	148.16	155.19
Alt Mx	195.51	160.61	-20.94	20.50	39.69	32.74	-4.96	4.84
Alt My	-27.90	4.71	175.96	137.24	-6.17	0.22	42.09	22.94
S132	GGGGGG	QQQQQQ	Q Q Q	Q Q Q	QQ QQ	QQ QQ	Q QQ Q	Zemin
N	2373.99	142.57	(azaltma	Nq=	237.61x0.600 =	142.57)		0.00
Alt Mx	-1.99	-0.28	0.16	-0.42	-0.30	0.10	-0.24	0.00
Alt My	4.14	0.61	0.36	0.16	0.16	0.20	0.58	0.00
	Deprem+X	Deprem-X	Deprem+Y	Deprem-Y	Rüzgar+X	Rüzgar-X	Rüzgar+Y	Rüzgar-Y
N	-146.52	-249.25	1441.89	1563.23	-9.51	-28.48	276.68	303.42
Alt Mx	465.94	377.84	-52.87	51.74	94.61	77.06	-12.52	12.23
Alt My	70.80	-13.86	616.64	717.29	15.71	-1.16	147.56	171.35
S133	GGGGGG	QQQQQQ	Q Q Q	Q Q Q	QQ QQ	QQ QQ	Q QQ Q	Zemin
N	1660.04	104.00	(azaltma	Nq=	174.38x0.601 =	104.80)		0.00
Alt Mx	0.00	0.00	-0.53	0.52	-0.03	-0.39	0.47	0.00
Alt My	2.21	0.42	-0.07	0.44	0.23	-0.04	0.55	0.00
	Deprem+X	Deprem-X	Deprem+Y	Deprem-Y	Rüzgar+X	Rüzgar-X	Rüzgar+Y	Rüzgar-Y
N	-0.16	-0.18	1111.33	1111.36	-0.02	-0.03	218.82	218.82
Alt Mx	290.83	234.71	-23.46	33.18	59.06	47.89	-7.92	7.83
Alt My	-0.03	0.01	220.41	220.36	-0.01	0.00	52.79	52.77
S134	GGGGGG	QQQQQQ	Q Q Q	Q Q Q	QQ QQ	QQ QQ	Q QQ Q	Zemin
N	2374.66	142.59	(azaltma	Nq=	237.65x0.600 =	142.59)		0.00
Alt Mx	1.98	0.27	0.40	-0.14	0.50	0.14	-0.11	0.00
Alt My	4.15	0.61	0.24	0.27	0.11	0.27	0.66	0.00
	Deprem+X	Deprem-X	Deprem+Y	Deprem-Y	Rüzgar+X	Rüzgar-X	Rüzgar+Y	Rüzgar-Y
N	146.96	248.73	1562.68	1440.63	9.45	28.40	303.35	276.63
Alt Mx	465.94	277.84	-52.19	52.42	94.61	77.06	-12.37	12.38
Alt My	-71.07	13.92	717.84	616.92	-15.75	1.17	171.52	147.66

TOPLAM Ng= 50090.03 Nq= 3167.98

3.2.2 Kolon kiriş Taşıyıcı Sistemin Metrajı:

Kat	Beton m^3	Kalıp m^2
1.kat Döşeme	140.51	540.44
1.kat Kiriş	89.36	384.67
1.kat Kolon	168.88	509.31
1.kat Toplam	398.76	1434.41
2.kat Döşeme	140.51	540.44
2.kat Kiriş	89.36	384.67
2.kat Kolon	168.88	509.31
2.kat Toplam	398.76	1434.41
3.kat Döşeme	140.51	540.44
3.kat Kiriş	89.36	384.67
3.kat Kolon	168.88	509.31
3.kat Toplam	398.76	1434.41
4.kat Döşeme	140.51	540.44
4.kat Kiriş	89.36	384.67
4.kat Kolon	168.88	509.31
4.kat Toplam	398.76	1434.41
5.kat Döşeme	140.51	540.44
5.kat Kiriş	89.36	384.67
5.kat Kolon	168.88	509.31
5.kat Toplam	398.76	1434.41
6.kat Döşeme	140.51	540.44
6.kat Kiriş	89.36	384.67
6.kat Kolon	168.88	509.31
6.kat Toplam	398.76	1434.41
7.kat Döşeme	140.51	540.44
7.kat Kiriş	89.36	384.67
7.kat Kolon	168.88	509.31
7.kat Toplam	398.76	1434.41
8.kat Döşeme	140.51	540.44
8.kat Kiriş	89.36	384.67
8.kat Kolon	168.88	509.31
8.kat Toplam	398.76	1434.41
9.kat Döşeme	140.51	540.44
9.kat Kiriş	89.36	384.67
9.kat Kolon	168.88	509.31
9.kat Toplam	398.76	1434.41
10.kat Döşeme	140.51	540.44
10.kat Kiriş	89.36	384.67
10.kat Kolon	168.88	509.31
10.kat Toplam	398.76	1434.41
11.kat Döşeme	140.51	540.44
11.kat Kiriş	89.36	384.67
11.kat Kolon	168.88	509.31
11.kat Toplam	398.76	1434.41
12.kat Döşeme	140.51	540.44
12.kat Kiriş	89.36	384.67
12.kat Kolon	168.88	509.31
12.kat Toplam	398.76	1434.41
13.kat Döşeme	140.51	540.44
13.kat Kiriş	89.36	384.67
13.kat Kolon	168.88	509.31
13.kat Toplam	398.76	1434.41
14.kat Döşeme	140.51	540.44
14.kat Kiriş	89.36	384.67
14.kat Kolon	168.88	509.31
14.kat Toplam	398.76	1434.41
15.kat Döşeme	140.51	540.44
15.kat Kiriş	89.36	384.67
15.kat Kolon	168.88	509.31

15.kat Toplam	398.76	1434.41
16.kat Döşeme	140.51	540.44
16.kat Kiriş	89.36	384.67
16.kat Kolon	168.88	509.31
16.kat Toplam	398.76	1434.41
17.kat Döşeme	140.51	540.44
17.kat Kiriş	89.36	384.67
17.kat Kolon	168.88	509.31
17.kat Toplam	398.76	1434.41
18.kat Döşeme	140.51	540.44
18.kat Kiriş	89.36	384.67
18.kat Kolon	168.88	509.31
18.kat Toplam	398.76	1434.41
19.kat Döşeme	140.51	540.44
19.kat Kiriş	89.36	384.67
19.kat Kolon	168.88	509.31
19.kat Toplam	398.76	1434.41
20.kat Döşeme	140.51	540.44
20.kat Kiriş	89.36	384.67
20.kat Kolon	168.88	509.31
20.kat Toplam	398.76	1434.41
21.kat Döşeme	140.51	540.44
21.kat Kiriş	89.36	384.67
21.kat Kolon	168.88	509.31
21.kat Toplam	398.76	1434.41
22.kat Döşeme	140.51	540.44
22.kat Kiriş	89.36	384.67
22.kat Kolon	168.88	509.31
22.kat Toplam	398.76	1434.41
23.kat Döşeme	140.51	540.44
23.kat Kiriş	89.36	384.67
23.kat Kolon	168.88	509.31
23.kat Toplam	398.76	1434.41
24.kat Döşeme	140.51	540.44
24.kat Kiriş	89.36	384.67
24.kat Kolon	168.88	509.31
24.kat Toplam	398.76	1434.41
25.kat Döşeme	140.51	540.44
25.kat Kiriş	89.36	384.67
25.kat Kolon	168.88	509.31
25.kat Toplam	398.76	1434.41
26.kat Döşeme	140.51	540.44
26.kat Kiriş	89.36	384.67
26.kat Kolon	168.88	509.31
26.kat Toplam	398.76	1434.41
27.kat Döşeme	140.51	540.44
27.kat Kiriş	89.36	384.67
27.kat Kolon	168.88	509.31
27.kat Toplam	398.76	1434.41
28.kat Döşeme	140.51	540.44
28.kat Kiriş	89.36	384.67
28.kat Kolon	168.88	509.31
28.kat Toplam	398.76	1434.41
29.kat Döşeme	140.51	540.44
29.kat Kiriş	89.36	384.67
29.kat Kolon	168.88	509.31
29.kat Toplam	398.76	1434.41
30.kat Döşeme	140.51	540.44
30.kat Kiriş	89.36	384.67
30.kat Kolon	168.88	509.31
30.kat Toplam	398.76	1434.41
31.kat Döşeme	140.51	540.44

31.kat Kiriş	89.36	384.67
31.kat Kolon	168.88	509.31
31.kat Toplam	398.76	1434.41
32.kat Döşeme	140.51	540.44
32.kat Kiriş	89.36	384.67
32.kat Kolon	168.88	509.31
32.kat Toplam	398.76	1434.41
33.kat Döşeme	140.51	540.44
33.kat Kiriş	89.36	384.67
33.kat Kolon	168.88	509.31
33.kat Toplam	398.76	1434.41
34.kat Döşeme	140.51	540.44
34.kat Kiriş	89.36	384.67
34.kat Kolon	168.88	509.31
34.kat Toplam	398.76	1434.41
35.kat Döşeme	140.51	540.44
35.kat Kiriş	89.36	384.67
35.kat Kolon	168.88	509.31
35.kat Toplam	398.76	1434.41
36.kat Döşeme	140.51	540.44
36.kat Kiriş	89.36	384.67
36.kat Kolon	168.88	509.31
36.kat Toplam	398.76	1434.41
37.kat Döşeme	140.51	540.44
37.kat Kiriş	89.36	384.67
37.kat Kolon	168.88	509.31
37.kat Toplam	398.76	1434.41
38.kat Döşeme	140.51	540.44
38.kat Kiriş	89.36	384.67
38.kat Kolon	168.88	509.31
38.kat Toplam	398.76	1434.41
39.kat Döşeme	140.51	540.44
39.kat Kiriş	89.36	384.67
39.kat Kolon	168.88	509.31
39.kat Toplam	398.76	1434.41
40.kat Döşeme	140.51	540.44
40.kat Kiriş	89.36	384.67
40.kat Kolon	168.88	509.31
40.kat Toplam	398.76	1434.41

Kat no	ø10 kg	ø12 kg	ø14 kg	ø16 kg	ø20 kg	TOPLAM kg
1.kat Döşeme	0.0	5266.3	774.8	0.0	0.0	6041.0
1.kat Kiriş	5970.9	0.0	1438.4	2941.7	6917.5	17268.5
1.kat Kolon	1999.7	412.5	0.0	0.0	18297.4	20709.5
1.kat Toplamı	7970.6	5678.7	2213.2	2941.7	25214.9	44019.1
2.kat Döşeme	0.0	5266.3	774.8	0.0	0.0	6041.0
2.kat Kiriş	3950.2	0.0	2882.0	3037.3	11461.7	21331.2
2.kat Kolon	1999.7	412.5	0.0	0.0	17138.8	19551.0
2.kat Toplamı	5949.8	5678.7	3656.8	3037.3	28600.5	46923.2
3.kat Döşeme	0.0	5266.3	774.8	0.0	0.0	6041.0
3.kat Kiriş	4105.5	0.0	2685.8	3519.0	12436.6	22746.9
3.kat Kolon	1999.7	412.5	0.0	0.0	17058.9	19471.1
3.kat Toplamı	6105.2	5678.7	3460.6	3519.0	29495.5	48259.1
4.kat Döşeme	0.0	5266.3	774.8	0.0	0.0	6041.0
4.kat Kiriş	4071.0	0.0	2570.9	3616.7	13018.3	23276.9
4.kat Kolon	1999.7	412.5	0.0	0.0	17058.9	19471.1
4.kat Toplamı	6070.7	5678.7	3345.6	3616.7	30077.2	48789.0
5.kat Döşeme	0.0	5266.3	774.8	0.0	0.0	6041.0
5.kat Kiriş	3656.7	0.0	3097.7	3648.2	12939.5	23342.1
5.kat Kolon	1999.7	412.5	0.0	0.0	17058.9	19471.1

5.kat Toplamı	5656.4	5678.7	3872.5	3648.2	29998.4	48854.2
6.kat Döşeme	0.0	5266.3	774.8	0.0	0.0	6041.0
6.kat Kiriş	3656.7	0.0	3101.5	3190.0	13337.2	23285.3
6.kat Kolon	1999.7	412.5	0.0	0.0	17058.9	19471.1
6.kat Toplamı	5656.4	5678.7	3876.2	3190.0	30396.1	48797.4
7.kat Döşeme	0.0	5266.3	774.8	0.0	0.0	6041.0
7.kat Kiriş	3660.2	0.0	3102.6	2968.7	13461.8	23193.3
7.kat Kolon	1999.7	412.5	0.0	0.0	17058.9	19471.1
7.kat Toplamı	5659.8	5678.7	3877.4	2968.7	30520.8	48705.4
8.kat Döşeme	0.0	5266.3	774.8	0.0	0.0	6041.0
8.kat Kiriş	3668.2	0.0	3181.1	2858.2	13269.1	22968.5
8.kat Kolon	1999.7	412.5	0.0	0.0	17058.9	19471.1
8.kat Toplamı	5659.8	5678.7	3955.9	2858.2	30328.0	48480.6
9.kat Döşeme	0.0	5266.3	774.8	0.0	0.0	6041.0
9.kat Kiriş	3887.1	0.0	3009.9	2611.0	13314.9	22822.9
9.kat Kolon	1999.7	412.5	0.0	0.0	17058.9	19471.1
9.kat Toplamı	5886.7	5678.7	3784.7	2611.0	30373.8	48335.0
10.kat Döşeme	0.0	5266.3	774.8	0.0	0.0	6041.0
10.kat Kiriş	4076.0	0.0	2731.5	2798.1	12920.4	22525.9
10.kat Kolon	1999.7	412.5	0.0	0.0	17058.9	19471.1
10.kat Toplamı	6075.6	5678.7	3506.3	2798.1	29979.3	48038.0
11.kat Döşeme	0.0	5266.3	774.8	0.0	0.0	6041.0
11.kat Kiriş	4017.3	0.0	2822.6	2898.9	12585.9	22324.6
11.kat Kolon	1999.7	412.5	0.0	0.0	17058.9	19471.1
11.kat Toplamı	6016.9	5678.7	3597.4	2898.9	29644.9	47836.8
12.kat Döşeme	0.0	5266.3	774.8	0.0	0.0	6041.0
12.kat Kiriş	4125.8	0.0	2718.8	3096.1	12197.6	22138.2
12.kat Kolon	1999.7	412.5	0.0	0.0	17058.9	19471.1
12.kat Toplamı	6125.4	5678.7	3493.6	3096.1	29256.5	47650.3
13.kat Döşeme	0.0	5266.3	774.8	0.0	0.0	6041.0
13.kat Kiriş	3960.0	0.0	2900.4	3160.4	12005.0	22025.8
13.kat Kolon	1999.7	412.5	0.0	0.0	17058.9	19471.1
13.kat Toplamı	5959.7	5678.7	3675.1	3160.4	29063.9	47537.9
14.kat Döşeme	0.0	5266.3	774.8	0.0	0.0	6041.0
14.kat Kiriş	4170.7	0.0	2853.3	3101.4	11660.7	21786.0
14.kat Kolon	1999.7	412.5	0.0	0.0	17058.9	19471.1
14.kat Toplamı	6170.3	5678.7	3628.1	3101.4	28719.6	47298.1
15.kat Döşeme	0.0	5266.3	774.8	0.0	0.0	6041.0
15.kat Kiriş	4170.7	0.0	2830.8	3101.4	11536.7	21639.5
15.kat Kolon	1999.7	412.5	0.0	0.0	17058.9	19471.1
15.kat Toplamı	6170.3	5678.7	3605.6	3101.4	28595.6	47151.6
16.kat Döşeme	0.0	5266.3	774.8	0.0	0.0	6041.0
16.kat Kiriş	4170.7	0.0	2814.5	3079.8	11450.4	21515.3
16.kat Kolon	1999.7	412.5	0.0	0.0	17058.9	19471.1
16.kat Toplamı	6170.3	5678.7	3589.3	3079.8	28509.3	47027.4
17.kat Döşeme	0.0	5266.3	774.8	0.0	0.0	6041.0
17.kat Kiriş	4213.1	0.0	2879.9	3008.6	11331.0	21432.5
17.kat Kolon	1999.7	412.5	0.0	0.0	17058.9	19471.1
17.kat Toplamı	6212.7	5678.7	3654.7	3008.6	28389.9	46944.6
18.kat Döşeme	0.0	5266.3	774.8	0.0	0.0	6041.0
18.kat Kiriş	4213.1	0.0	2881.5	3019.4	11151.9	21265.9
18.kat Kolon	1999.7	412.5	0.0	0.0	17058.9	19471.1
18.kat Toplamı	6212.7	5678.7	3656.3	3019.4	28210.8	46778.0
19.kat Döşeme	0.0	5266.3	774.8	0.0	0.0	6041.0
19.kat Kiriş	4233.8	0.0	2956.1	2713.1	11103.5	21006.5
19.kat Kolon	1999.7	412.5	0.0	0.0	17058.9	19471.1
19.kat Toplamı	6233.4	5678.7	3730.9	2713.1	28162.5	46518.6
20.kat Döşeme	0.0	5266.3	774.8	0.0	0.0	6041.0
20.kat Kiriş	4164.7	0.0	2953.5	2762.2	10839.1	20719.6
20.kat Kolon	1999.7	412.5	0.0	0.0	17058.9	19471.1
20.kat Toplamı	6164.4	5678.7	3728.3	2762.2	27898.0	46231.7

21.kat Döşeme	0.0	5266.3	774.8	0.0	0.0	6041.0
21.kat Kiriş	4209.6	0.0	2992.0	2773.7	10666.6	20642.0
21.kat Kolon	1999.7	412.5	0.0	0.0	17058.9	19471.1
21.kat Toplamı	6209.3	5678.7	3766.8	2773.7	27725.6	46154.1
22.kat Döşeme	0.0	5266.3	774.8	0.0	0.0	6041.0
22.kat Kiriş	4230.3	0.0	3048.6	3047.9	10118.1	20444.9
22.kat Kolon	1999.7	412.5	0.0	0.0	17058.9	19471.1
22.kat Toplamı	6230.0	5678.7	3823.4	3047.9	27177.0	45957.0
23.kat Döşeme	0.0	5266.3	774.8	0.0	0.0	6041.0
23.kat Kiriş	4230.3	0.0	3251.6	3041.6	9720.4	20244.0
23.kat Kolon	1999.7	412.5	0.0	0.0	17058.9	19471.1
23.kat Toplamı	6230.0	5678.7	4026.4	3041.6	26779.4	45756.1
24.kat Döşeme	0.0	5266.3	774.8	0.0	0.0	6041.0
24.kat Kiriş	4216.5	0.0	3054.4	3429.8	9348.2	20048.9
24.kat Kolon	1999.7	412.5	0.0	0.0	17058.9	19471.1
24.kat Toplamı	6216.2	5678.7	3829.2	3429.8	26407.1	45561.0
25.kat Döşeme	0.0	5266.3	774.8	0.0	0.0	6041.0
25.kat Kiriş	4344.3	0.0	3197.8	3079.4	9251.3	19872.8
25.kat Kolon	1999.7	412.5	0.0	0.0	17058.9	19471.1
25.kat Toplamı	6343.9	5678.7	3972.6	3079.4	26310.3	45384.9
26.kat Döşeme	0.0	5266.3	774.8	0.0	0.0	6041.0
26.kat Kiriş	4344.3	0.0	3197.8	3071.6	9064.0	19677.6
26.kat Kolon	2265.1	0.0	0.0	0.0	17058.9	19324.1
26.kat Toplamı	6609.4	5266.3	3972.6	3071.6	26123.0	45042.7
27.kat Döşeme	0.0	5266.3	774.8	0.0	0.0	6041.0
27.kat Kiriş	4823.7	0.0	2564.5	3058.4	8755.8	19202.3
27.kat Kolon	2265.1	0.0	0.0	0.0	17058.9	19324.1
27.kat Toplamı	7088.8	5266.3	3339.3	3058.4	25814.7	44567.4
28.kat Döşeme	0.0	5266.3	774.8	0.0	0.0	6041.0
28.kat Kiriş	4782.7	0.0	2590.9	3130.6	8541.4	19045.7
28.kat Kolon	2265.1	0.0	0.0	0.0	17058.9	19324.1
28.kat Toplamı	7047.9	5266.3	3365.7	3130.6	25600.4	44410.8
29.kat Döşeme	0.0	5266.3	774.8	0.0	0.0	6041.0
29.kat Kiriş	5285.8	0.0	1983.5	2823.0	8479.8	18572.1
29.kat Kolon	2265.1	0.0	0.0	0.0	17058.9	19324.1
29.kat Toplamı	7550.9	5266.3	2758.3	2823.0	25538.8	43937.2
30.kat Döşeme	0.0	5266.3	774.8	0.0	0.0	6041.0
30.kat Kiriş	5377.1	0.0	1993.0	3041.4	7831.1	18242.5
30.kat Kolon	2265.1	0.0	0.0	0.0	17058.9	19324.1
30.kat Toplamı	7642.2	5266.3	2767.8	3041.4	24890.0	43607.6
31.kat Döşeme	0.0	5266.3	774.8	0.0	0.0	6041.0
31.kat Kiriş	5401.2	0.0	2146.7	2858.4	7550.6	17957.0
31.kat Kolon	2265.1	0.0	0.0	0.0	17058.9	19324.1
31.kat Toplamı	7666.4	5266.3	2921.5	2858.4	24609.6	43322.1
32.kat Döşeme	0.0	5266.3	774.8	0.0	0.0	6041.0
32.kat Kiriş	5618.7	0.0	1982.1	2676.1	7299.6	17576.5
32.kat Kolon	2265.1	0.0	0.0	0.0	17058.9	19324.1
32.kat Toplamı	7883.9	5266.3	2756.8	2676.1	24358.6	42941.6
33.kat Döşeme	0.0	5266.3	774.8	0.0	0.0	6041.0
33.kat Kiriş	5618.7	0.0	2056.1	2773.1	6788.0	17236.0
33.kat Kolon	2265.1	0.0	0.0	0.0	17058.9	19324.1
33.kat Toplamı	7883.9	5266.3	2830.9	2773.1	23847.0	42601.1
34.kat Döşeme	0.0	5266.3	774.8	0.0	0.0	6041.0
34.kat Kiriş	5819.0	0.0	1705.6	2766.2	6405.2	16695.9
34.kat Kolon	2265.1	0.0	0.0	0.0	17058.9	19324.1
34.kat Toplamı	8084.1	5266.3	2480.4	2766.2	23464.1	42061.0
35.kat Döşeme	0.0	5266.3	774.8	0.0	0.0	6041.0
35.kat Kiriş	5819.0	0.0	1655.5	2786.5	6091.5	16352.5
35.kat Kolon	2265.1	0.0	0.0	0.0	17058.9	19324.1
35.kat Toplamı	8084.1	5266.3	2430.3	2786.5	23150.4	41717.6
36.kat Döşeme	0.0	5266.3	774.8	0.0	0.0	6041.0
36.kat Kiriş	5625.6	0.0	1607.4	2526.4	5989.2	15748.6
36.kat Kolon	2265.1	0.0	0.0	0.0	17058.9	19324.1

36.kat Toplamı	7890.9	5266.3	2382.1	2526.4	23048.1	41113.7
37.kat Döşeme	0.0	5266.3	774.8	0.0	0.0	6041.0
37.kat Kiriş	5598.0	0.0	1609.4	3152.2	4906.1	15265.8
37.kat Kolon	2265.1	0.0	0.0	0.0	17058.9	19324.1
37.kat Toplamı	7863.1	5266.3	2384.2	3152.2	21965.1	40630.9
38.kat Döşeme	0.0	5266.3	774.8	0.0	0.0	6041.0
38.kat Kiriş	5632.6	0.0	1785.2	3063.2	4452.6	14933.5
38.kat Kolon	2265.1	0.0	0.0	0.0	17058.9	19324.1
38.kat Toplamı	7897.7	5266.3	2560.0	3063.2	21511.5	40298.6
39.kat Döşeme	0.0	5266.3	774.8	0.0	0.0	6041.0
39.kat Kiriş	5819.0	0.0	1537.5	2759.1	4685.1	14800.7
39.kat Kolon	2265.1	0.0	0.0	0.0	17058.9	19324.1
39.kat Toplamı	8084.1	5266.3	2312.3	2759.1	21744.0	40165.8
40.kat Döşeme	0.0	5266.3	774.8	0.0	0.0	6041.0
40.kat Kiriş	6122.8	0.0	1808.0	2466.8	4209.3	14606.9
40.kat Kolon	2265.1	0.0	0.0	0.0	17058.9	19324.1
40.kat Toplamı	8387.9	5266.3	2582.8	2466.8	21268.2	39972.0
TOPLAM	269021.6	220962.0	133171.7	119455.4		

4. Perdeli Taşıyıcı Sistem ile Kolon-Kiriş Taşıyıcılı Sistemin Sonuçlarının Karşılaştırılması:

1- Her iki sistemde tasarımı sırasında aynı zemin koşullarında olmasından yola çıkılarak analiz yapıldığı için deprem spektrum grafiği aynıdır. Bir deprem anında her modun periyodu vardır. Bu periyotlar deprem spektrum grafiğini kestiği noktalara bakılarak, hangisi daha büyük ivmeye neden oluyorsa, o mod yapı için önemlidir. Her iki sistem içinde 9 moddan en önemlisi 1.mod görülmüştür.

T (s)	Sa (m/s²) Ao.I.S(t)
0.00	4.000
0.10	10.000
0.30	10.000
0.40	7.944
0.50	6.644
0.60	5.744
0.70	5.076
0.80	4.564
0.90	4.152
1.00	3.816
1.10	3.536
1.20	3.300
1.30	3.096
1.40	2.916
1.50	2.800
5.00	2.800

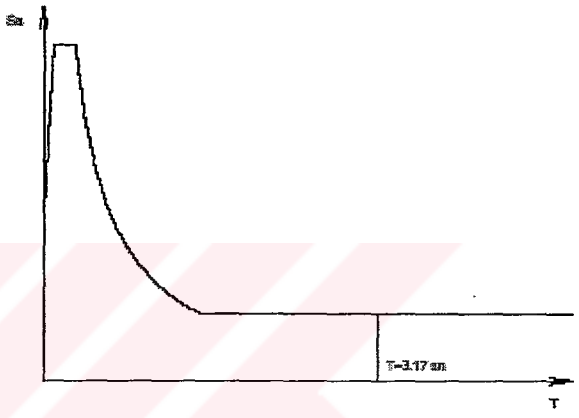

Şekil 4.1 Kolon kiriş sistemine ait doğal titreşim periyodu

T (s)	Sa (m/s²) Ao.I.S(t)
0.00	4.000
0.10	10.000
0.30	10.000
0.40	7.944
0.50	6.644
0.60	5.744
0.70	5.076
0.80	4.564
0.90	4.152
1.00	3.816
1.10	3.536
1.20	3.300
1.30	3.096
1.40	2.916
1.50	2.800
5.00	2.800

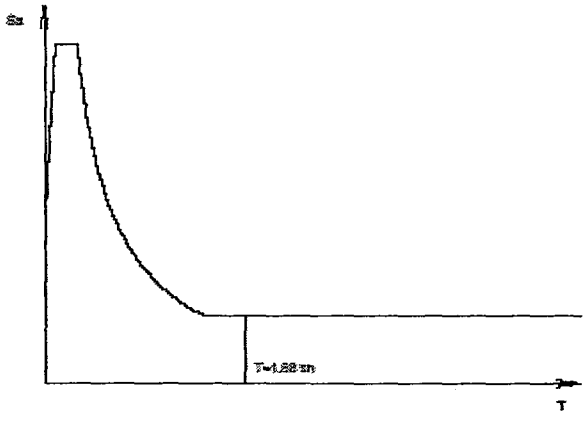

Şekil 4.2 Perdeli sistemine ait doğal titreşim periyodu

Şekil 4.1 ve 4.2 de Kolonlu kirişli sistem için T = 3.17 sn ise Perdeli sistem için T = 1.89 sn olduğu görülmektedir. Buna göre perdeli sistemin T değeri daha düşük olması Mod

şekilleri ve doğal frekansları yapının rijitliği ile ilgili olduğundan perdeli sistemin çok daha rijit olduğu sonucuna varırız.

2- 1. mod için elde edilen yön doğrultularındaki etkin kütle oranlarına bakıldığı zaman perdeli sistem için elde edilen etkin kütle oranının çok daha düşük olduğu görülmektedir. Aynı şekilde toplam kütle oranı açısından baktığımızda da aynı sonuca ulaşmaktayız.

	Kolonlu kirişli sistem	Perdeli sistem
M_{xr} %	0.070	0.000
M_{yr} %	72.755	65.214
M_{br} %	0.004	0.000

Çizelge 4.1 Birinci mod doğrultulardaki etkin kütle oranı

	Kolonlu kirişli sistem	Perdeli sistem
M_{xr} %	91.97	91.16
M_{yr} %	91.80	91.30

Çizelge 4.2 Dinamik kütle oranları

3- Perdeli yapının toplam kütlesi ile kolonlu kirişli olarak tasarlandığı haline ait kütlesi kıyaslandığında perdeli haldeki kütlesinin daha fazla olduğu görülmektedir. Daha ağır bir yapı daha rijittir. Bu sebepten perdeli sistemin daha rijit olduğu söylenebilir.

	Kolonlu kirişli sistem	Perdeli sistem
ΣW_t	51673.045	61113.402

Çizelge 4.3 Yapı Toplam Ağırlıkları

4- Kirişli kolonlu sisteme uygulanan 9. yükleme, 10. yükleme, 11. yükleme ve 12. yükleme sonunda oluşan x ve y yönlü deprem yapı salınım sonuçlarının perdeli sistemin verdiği yapı salınım sonuçlarından 2,5- 3 kat daha fazla olduğu görülmüştür.

	Kolonlu kirişli sistem	Perdeli sistem
X	0.00143	0.00041
Y	0.00145	0.00054

Çizelge 4.4 Deprem yapı salınımları

Kat Deprem deplasmanları

Kat	9. yükleme		10. yükleme		11. yükleme		12. yükleme	
(dyf)	δx (m)	θz (rad)	δz (m)	θz (rad)	δy (m)	θz (rad)	δy (m)	θz (rad)
40	0.1857102	0.0020464	0.1831005	0.0001879	-0.188831	-0.001104	-0.188508	0.0011119
39	0.1822562	0.0020305	0.1796677	0.0001842	-0.185180	-0.001097	-0.185256	0.0011043
38	0.1785953	0.0020112	0.1760316	0.0001805	-0.181321	-0.001087	-0.181396	0.0010946
37	0.1747148	0.0019880	0.1721807	0.0001767	-0.177238	-0.001076	-0.177312	0.0010827
36	0.1706306	0.0019611	0.1681309	0.0001726	-0.172948	-0.001062	-0.173021	0.0010687
35	0.1663664	0.0019307	0.1639054	0.0001682	-0.168474	-0.001046	-0.168546	0.0010529
34	0.1619451	0.0018971	0.1595270	0.0001635	-0.163843	-0.001029	-0.163914	0.0010353
33	0.1573872	0.0018608	0.1550156	0.0001586	-0.159078	-0.001010	-0.159147	0.0010163
32	0.1527104	0.0018220	0.1503887	0.0001535	-0.154197	-0.000990	-0.154264	0.0009960
31	0.1479300	0.0017809	0.1456611	0.0001482	-0.149217	-0.000968	-0.149283	0.0009745
30	0.1430592	0.0017378	0.1408457	0.0001428	-0.144152	-0.000946	-0.144216	0.0009518
29	0.1381055	0.0016928	0.1359541	0.0001373	-0.139014	-0.000922	-0.139077	0.0009281
28	0.1330917	0.0016460	0.1309965	0.0001317	-0.133817	-0.000898	-0.133878	0.0009034
27	0.1280158	0.0015977	0.1259829	0.0001260	-0.128571	-0.000873	-0.128630	0.0008778
26	0.1228914	0.0015479	0.1209228	0.0001203	-0.123287	-0.000846	-0.123344	0.0008513
25	0.1177276	0.0014966	0.1158250	0.0001145	-0.117974	-0.000819	-0.118029	0.0008241
24	0.1125328	0.0014441	0.1106980	0.0001088	-0.112640	-0.000792	-0.112693	0.0007961
23	0.1073148	0.0013904	0.1055492	0.0001030	-0.107293	-0.000763	-0.107344	0.0007674
22	0.1020803	0.0013356	0.1003854	0.0000973	-0.101941	-0.000734	-0.101990	0.0007380
21	0.0968357	0.0012796	0.0952129	0.0000915	-0.096590	-0.000704	-0.096637	0.0007079
20	0.0915865	0.0012226	0.0900372	0.0000857	-0.091246	-0.000674	-0.091291	0.0006772
19	0.0863381	0.0011645	0.0848637	0.0000800	-0.085915	-0.000643	-0.085958	0.0006459
18	0.0810960	0.0011054	0.0796976	0.0000742	-0.080602	-0.000611	-0.080643	0.0006140
17	0.0758657	0.0010453	0.0745447	0.0000685	-0.075313	-0.000579	-0.075351	0.0005815
16	0.0706530	0.0009842	0.0694107	0.0000627	-0.070051	-0.000546	-0.070087	0.0005485
15	0.0654635	0.0009221	0.0643012	0.0000570	-0.064824	-0.000513	-0.064857	0.0005148
14	0.0603036	0.0008590	0.0592224	0.0000513	-0.059635	-0.000479	-0.059665	0.0004806
13	0.0551799	0.0007951	0.0541811	0.0000457	-0.054490	-0.000444	-0.054519	0.0004458
12	0.0500997	0.0007302	0.0491843	0.0000401	-0.049398	-0.000409	-0.049424	0.0004105
11	0.0450708	0.0006646	0.0442399	0.0000345	-0.044365	-0.000373	-0.044388	0.0003746
10	0.0401021	0.0005981	0.0393567	0.0000290	-0.039400	-0.000337	-0.039421	0.0003383
9	0.0352035	0.0005310	0.0345445	0.0000235	-0.034514	-0.000301	-0.034532	0.0003016
8	0.0303862	0.0004632	0.0298142	0.0000182	-0.029717	-0.000264	-0.029733	0.0002645
7	0.0256619	0.0003950	0.0251777	0.0000129	-0.025023	-0.000226	-0.025036	0.0002270
6	0.0210451	0.0003265	0.0206487	0.0000077	-0.020446	-0.000189	-0.020457	0.0001893
5	0.0165551	0.0002581	0.0162463	0.0000029	-0.016010	-0.000151	-0.016018	0.0001515
4	0.0122248	0.0001906	0.0120017	-0.000001	-0.011752	-0.000114	-0.011758	0.0001138
3	0.0081205	0.0001255	0.0079786	-0.000004	-0.007746	-0.000077	-0.007750	0.0000770
2	0.0043943	0.0000664	0.0043237	-0.000005	-0.004151	-0.000042	-0.004153	0.0000425
1	0.0014192	0.0000204	0.0014000	-0.000003	-0.001323	-0.000014	-0.001324	0.0000140

Deprem yapi salinimi: x= 0.00143 y= 0.00145

Şekil 4.3 Kolon Kiriş sistemine ait kat deplasmanları

Kat Deprem deplasmanları

Kat	9. yükleme		10. yükleme		11. yükleme		12. yükleme	
(dyf)	δx (m)	θz (rad)	δx (m)	θz (rad)	δy (m)	θz (rad)	δy (m)	θz (rad)
40	0.0537971	0.0010149	0.0533423	0.0001950	-0.070364	-0.000486	-0.070363	0.0004866
39	0.0521117	0.0010002	0.0516665	0.0001899	-0.068161	-0.000481	-0.068161	0.0004808
38	0.0504075	0.0009843	0.0499716	0.0001850	-0.065933	-0.000474	-0.065933	0.0004742
37	0.0486857	0.0009673	0.0482591	0.0001801	-0.063682	-0.000467	-0.063682	0.0004670
36	0.0469488	0.0009493	0.0465312	0.0001753	-0.061411	-0.000459	-0.061411	0.0004591
35	0.0451998	0.0009301	0.0447915	0.0001704	-0.059124	-0.000450	-0.059124	0.0004505
34	0.0434425	0.0009099	0.0430436	0.0001655	-0.056828	-0.000441	-0.056827	0.0004414
33	0.0416809	0.0008888	0.0412917	0.0001605	-0.054526	-0.000432	-0.054526	0.0004318
32	0.0399194	0.0008668	0.0395402	0.0001555	-0.052225	-0.000422	-0.052225	0.0004217
31	0.0381623	0.0008441	0.0377936	0.0001503	-0.049929	-0.000411	-0.049929	0.0004112
30	0.0364134	0.0008206	0.0360557	0.0001450	-0.047645	-0.000400	-0.047645	0.0004004
29	0.0346763	0.0007964	0.0343300	0.0001396	-0.045375	-0.000389	-0.045375	0.0003893
28	0.0329543	0.0007717	0.0326198	0.0001341	-0.043125	-0.000378	-0.043125	0.0003779
27	0.0312501	0.0007464	0.0309280	0.0001285	-0.040899	-0.000366	-0.040899	0.0003662
26	0.0295667	0.0007207	0.0292574	0.0001228	-0.038699	-0.000354	-0.038699	0.0003543
25	0.0279064	0.0006945	0.0276102	0.0001169	-0.036528	-0.000342	-0.036528	0.0003422
24	0.0262710	0.0006678	0.0259885	0.0001111	-0.034390	-0.000330	-0.034390	0.0003299
23	0.0246626	0.0006407	0.0243941	0.0001051	-0.032287	-0.000317	-0.032287	0.0003173
22	0.0230828	0.0006132	0.0228288	0.0000991	-0.030221	-0.000304	-0.030221	0.0003045
21	0.0215332	0.0005851	0.0212940	0.0000930	-0.028193	-0.000291	-0.028193	0.0002915
20	0.0200152	0.0005567	0.0197911	0.0000868	-0.026207	-0.000278	-0.026207	0.0002782
19	0.0185302	0.0005277	0.0183216	0.0000806	-0.024264	-0.000264	-0.024264	0.0002647
18	0.0170796	0.0004983	0.0168868	0.0000744	-0.022366	-0.000251	-0.022366	0.0002509
17	0.0156650	0.0004684	0.0154882	0.0000681	-0.020516	-0.000237	-0.020516	0.0002368
16	0.0142880	0.0004380	0.0141275	0.0000619	-0.018715	-0.000222	-0.018715	0.0002225
15	0.0129505	0.0004071	0.0128062	0.0000556	-0.016966	-0.000208	-0.016966	0.0002079
14	0.0116544	0.0003759	0.0115265	0.0000494	-0.015272	-0.000193	-0.015272	0.0001931
13	0.0104019	0.0003443	0.0102903	0.0000433	-0.013635	-0.000178	-0.013635	0.0001780
12	0.0091956	0.0003124	0.0091000	0.0000373	-0.012060	-0.000162	-0.012060	0.0001627
11	0.0080382	0.0002804	0.0079583	0.0000314	-0.010548	-0.000147	-0.010548	0.0001472
10	0.0069330	0.0002484	0.0068682	0.0000258	-0.009105	-0.000131	-0.009105	0.0001317
9	0.0058836	0.0002166	0.0058331	0.0000205	-0.007734	-0.000116	-0.007734	0.0001160
8	0.0048942	0.0001852	0.0048569	0.0000155	-0.006442	-0.000100	-0.006442	0.0001004
7	0.0039696	0.0001546	0.0039442	0.0000111	-0.005233	-0.000085	-0.005233	0.0000849
6	0.0031154	0.0001250	0.0031003	0.0000072	-0.004115	-0.000069	-0.004115	0.0000697
5	0.0023381	0.0000968	0.0023312	0.0000040	-0.003095	-0.000055	-0.003095	0.0000550
4	0.0016456	0.0000705	0.0016447	0.0000016	-0.002185	-0.000040	-0.002185	0.0000408
3	0.0010477	0.0000467	0.0010501	0.0000001	-0.001395	-0.000027	-0.001395	0.0000277
2	0.0005575	0.0000261	0.0005608	-0.000000	-0.000745	-0.000015	-0.000745	0.0000158
1	0.0001944	0.0000095	0.0001966	-0.000000	-0.000260	-0.000006	-0.000260	0.0000060

Deprem yapi salinimi: x= 0.00041 y= 0.00054

Şekil 4.4 Perdeli taşıyıcı sistemine ait kat deplasmanları

5- %5 lik yatay kuvvet dış merkezliği altında oluşan ötelenme ve burulma sonuçları incelendiğinde kolon kirişli taşıyıcı sistemin daha büyük sonuçlar verdiği görülmüştür. Bu durumda Perdeli taşıyıcı sistemin daha rijit olduğu sonucuna varıyoruz.

Perdeli Sisteme ait Sonuçlar;

X YÖNÜ (+%5)

Kat	ΔX düst(m)	ΔX dalt(m)	ΔX ort	nbi	nki	ΔX/h	θi	kat tipi
40	0.0015209	0.0018947	0.0017078	1.11	0.00	0.00058	0.00365	Normal kat
39	0.0015266	0.0019300	0.0017283	1.12	1.01	0.00059	0.00397	Normal kat
38	0.0015325	0.0019625	0.0017475	1.12	1.01	0.00060	0.00432	Normal kat
37	0.0015353	0.0019933	0.0017643	1.13	1.01	0.00061	0.00469	Normal kat
36	0.0015354	0.0020206	0.0017780	1.14	1.01	0.00062	0.00507	Normal kat
35	0.0015323	0.0020434	0.0017879	1.14	1.01	0.00063	0.00548	Normal kat
34	0.0015260	0.0020612	0.0017936	1.15	1.00	0.00063	0.00589	Normal kat
33	0.0015162	0.0020735	0.0017949	1.16	1.00	0.00064	0.00632	Normal kat
32	0.0015029	0.0020804	0.0017916	1.16	1.00	0.00064	0.00676	Normal kat
31	0.0014866	0.0020824	0.0017845	1.17	1.00	0.00064	0.00720	Normal kat
30	0.0014676	0.0020797	0.0017737	1.17	0.99	0.00064	0.00764	Normal kat
29	0.0014461	0.0020730	0.0017596	1.18	0.99	0.00064	0.00807	Normal kat
28	0.0014222	0.0020626	0.0017424	1.18	0.99	0.00063	0.00848	Normal kat
27	0.0013960	0.0020488	0.0017224	1.19	0.99	0.00063	0.00886	Normal kat
26	0.0013679	0.0020324	0.0017001	1.20	0.99	0.00063	0.00920	Normal kat
25	0.0013379	0.0020137	0.0016758	1.20	0.99	0.00062	0.00951	Normal kat
24	0.0013060	0.0019930	0.0016495	1.21	0.98	0.00061	0.00976	Normal kat
23	0.0012724	0.0019707	0.0016216	1.22	0.98	0.00061	0.00995	Normal kat
22	0.0012371	0.0019470	0.0015921	1.22	0.98	0.00060	0.01009	Normal kat
21	0.0012003	0.0019220	0.0015612	1.23	0.98	0.00059	0.01016	Normal kat
20	0.0011620	0.0018958	0.0015289	1.24	0.98	0.00058	0.01017	Normal kat
19	0.0011221	0.0018683	0.0014952	1.25	0.98	0.00057	0.01012	Normal kat
18	0.0010807	0.0018392	0.0014599	1.26	0.98	0.00057	0.01002	Normal kat
17	0.0010378	0.0018083	0.0014230	1.27	0.97	0.00056	0.00987	Normal kat
16	0.0009933	0.0017753	0.0013843	1.28	0.97	0.00055	0.00967	Normal kat
15	0.0009473	0.0017397	0.0013435	1.29	0.97	0.00054	0.00943	Normal kat
14	0.0008998	0.0017010	0.0013004	1.31	0.97	0.00052	0.00916	Normal kat
13	0.0008508	0.0016585	0.0012546	1.32	0.96	0.00051	0.00885	Normal kat
12	0.0008002	0.0016115	0.0012059	1.34	0.96	0.00050	0.00852	Normal kat
11	0.0007482	0.0015592	0.0011537	1.35	0.96	0.00048	0.00816	Normal kat
10	0.0006946	0.0015006	0.0010976	1.37	0.95	0.00046	0.00777	Normal kat
9	0.0006394	0.0014345	0.0010370	1.38	0.94	0.00044	0.00735	Normal kat
8	0.0005825	0.0013596	0.0009711	1.40	0.94	0.00042	0.00690	Normal kat
7	0.0005238	0.0012744	0.0008991	1.42	0.93	0.00039	0.00641	Normal kat
6	0.0004629	0.0011770	0.0008200	1.44	0.91	0.00036	0.00588	Normal kat
5	0.0003993	0.0010653	0.0007323	1.45	0.89	0.00033	0.00530	Normal kat
4	0.0003321	0.0009360	0.0006341	1.48	0.87	0.00029	0.00464	Normal kat
3	0.0002597	0.0007834	0.0005215	1.50	0.82	0.00024	0.00387	Normal kat
2	0.0001789	0.0005973	0.0003881	1.54	0.74	0.00018	0.00293	Normal kat
1	0.0000875	0.0003300	0.0002089	1.58	0.54	0.00010	0.00161	Normal kat

X YÖNÜ (-%5)

Kat	ΔX düst(m)	ΔX dalt(m)	ΔX ort	nbi	nki	ΔX/h	θi	kat tipi
40	0.0016197	0.0017472	0.0016834	1.04	0.00	0.00054	0.00360	Normal kat
39	0.0016393	0.0017654	0.0017024	1.04	1.01	0.00054	0.00391	Normal kat
38	0.0016582	0.0017818	0.0017200	1.04	1.01	0.00055	0.00425	Normal kat
37	0.0016738	0.0017965	0.0017351	1.04	1.01	0.00055	0.00461	Normal kat
36	0.0016857	0.0018086	0.0017471	1.04	1.01	0.00056	0.00498	Normal kat
35	0.0016933	0.0018173	0.0017553	1.04	1.00	0.00056	0.00538	Normal kat
34	0.0016964	0.0018224	0.0017594	1.04	1.00	0.00056	0.00578	Normal kat
33	0.0016949	0.0018233	0.0017591	1.04	1.00	0.00056	0.00620	Normal kat
32	0.0016889	0.0018200	0.0017545	1.04	1.00	0.00056	0.00662	Normal kat
31	0.0016789	0.0018130	0.0017460	1.04	1.00	0.00056	0.00705	Normal kat
30	0.0016654	0.0018024	0.0017339	1.04	0.99	0.00055	0.00747	Normal kat
29	0.0016487	0.0017885	0.0017186	1.04	0.99	0.00055	0.00788	Normal kat
28	0.0016291	0.0017716	0.0017003	1.04	0.99	0.00055	0.00827	Normal kat
27	0.0016068	0.0017518	0.0016793	1.04	0.99	0.00054	0.00864	Normal kat
26	0.0015823	0.0017296	0.0016560	1.04	0.99	0.00053	0.00897	Normal kat
25	0.0015560	0.0017053	0.0016306	1.05	0.98	0.00052	0.00925	Normal kat
24	0.0015278	0.0016790	0.0016034	1.05	0.98	0.00052	0.00949	Normal kat
23	0.0014980	0.0016510	0.0015745	1.05	0.98	0.00051	0.00967	Normal kat
22	0.0014668	0.0016213	0.0015440	1.05	0.98	0.00050	0.00978	Normal kat
21	0.0014342	0.0015901	0.0015122	1.05	0.98	0.00049	0.00984	Normal kat
20	0.0014004	0.0015574	0.0014789	1.05	0.98	0.00048	0.00984	Normal kat
19	0.0013653	0.0015232	0.0014443	1.05	0.98	0.00047	0.00978	Normal kat
18	0.0013288	0.0014873	0.0014081	1.06	0.97	0.00046	0.00966	Normal kat
17	0.0012909	0.0014496	0.0013703	1.06	0.97	0.00045	0.00950	Normal kat
16	0.0012515	0.0014098	0.0013307	1.06	0.97	0.00043	0.00930	Normal kat
15	0.0012105	0.0013678	0.0012892	1.06	0.97	0.00042	0.00905	Normal kat
14	0.0011678	0.0013232	0.0012455	1.06	0.97	0.00041	0.00877	Normal kat
13	0.0011232	0.0012757	0.0011994	1.06	0.96	0.00039	0.00846	Normal kat
12	0.0010764	0.0012247	0.0011506	1.06	0.96	0.00038	0.00813	Normal kat
11	0.0010273	0.0011699	0.0010986	1.06	0.95	0.00036	0.00777	Normal kat
10	0.0009757	0.0011107	0.0010432	1.06	0.95	0.00034	0.00738	Normal kat
9	0.0009210	0.0010463	0.0009836	1.06	0.94	0.00032	0.00697	Normal kat
8	0.0008629	0.0009761	0.0009195	1.06	0.93	0.00030	0.00653	Normal kat
7	0.0008006	0.0008991	0.0008498	1.06	0.92	0.00028	0.00606	Normal kat
6	0.0007334	0.0008143	0.0007739	1.05	0.91	0.00025	0.00555	Normal kat
5	0.0006598	0.0007206	0.0006902	1.04	0.89	0.00022	0.00499	Normal kat
4	0.0005774	0.0006163	0.0005969	1.03	0.86	0.00019	0.00436	Normal kat
3	0.0004819	0.0004987	0.0004903	1.02	0.82	0.00015	0.00363	Normal kat
2	0.0003650	0.0003632	0.0003641	1.00	0.74	0.00011	0.00274	Normal kat
1	0.0002025	0.0001891	0.0001958	1.03	0.54	0.00006	0.00151	Normal kat

Y YÖNÜ (+%5)

Kat	ΔY dsol(m)	ΔY dsağ(m)	ΔY ort	nbi	nki	ΔY/h	θi	kat tipi
40	0.0021149	0.0022902	0.0022026	1.04	0.00	0.00070	0.00461	Normal kat
39	0.0021291	0.0023264	0.0022278	1.04	1.01	0.00072	0.00502	Normal kat
38	0.0021423	0.0023604	0.0022514	1.05	1.01	0.00073	0.00547	Normal kat
37	0.0021520	0.0023905	0.0022712	1.05	1.01	0.00074	0.00595	Normal kat
36	0.0021578	0.0024152	0.0022865	1.06	1.01	0.00074	0.00645	Normal kat
35	0.0021595	0.0024341	0.0022968	1.06	1.00	0.00075	0.00698	Normal kat
34	0.0021567	0.0024466	0.0023017	1.06	1.00	0.00075	0.00752	Normal kat
33	0.0021495	0.0024528	0.0023011	1.07	1.00	0.00075	0.00809	Normal kat
32	0.0021378	0.0024530	0.0022954	1.07	1.00	0.00075	0.00866	Normal kat
31	0.0021219	0.0024476	0.0022847	1.07	1.00	0.00075	0.00923	Normal kat
30	0.0021020	0.0024370	0.0022695	1.07	0.99	0.00075	0.00980	Normal kat
29	0.0020783	0.0024216	0.0022499	1.08	0.99	0.00075	0.01034	Normal kat
28	0.0020511	0.0024020	0.0022265	1.08	0.99	0.00074	0.01086	Normal kat
27	0.0020210	0.0023790	0.0022000	1.08	0.99	0.00073	0.01134	Normal kat
26	0.0019879	0.0023528	0.0021704	1.08	0.99	0.00072	0.01176	Normal kat
25	0.0019523	0.0023239	0.0021381	1.09	0.99	0.00072	0.01212	Normal kat
24	0.0019141	0.0022925	0.0021033	1.09	0.98	0.00071	0.01242	Normal kat
23	0.0018737	0.0022590	0.0020663	1.09	0.98	0.00070	0.01264	Normal kat
22	0.0018310	0.0022235	0.0020273	1.10	0.98	0.00068	0.01279	Normal kat
21	0.0017862	0.0021862	0.0019862	1.10	0.98	0.00067	0.01287	Normal kat
20	0.0017393	0.0021469	0.0019431	1.10	0.98	0.00066	0.01287	Normal kat
19	0.0016901	0.0021056	0.0018979	1.11	0.98	0.00065	0.01280	Normal kat
18	0.0016387	0.0020623	0.0018505	1.11	0.98	0.00063	0.01267	Normal kat
17	0.0015850	0.0020167	0.0018009	1.12	0.97	0.00062	0.01247	Normal kat
16	0.0015290	0.0019686	0.0017488	1.13	0.97	0.00061	0.01222	Normal kat
15	0.0014706	0.0019178	0.0016942	1.13	0.97	0.00059	0.01191	Normal kat
14	0.0014094	0.0018637	0.0016366	1.14	0.97	0.00057	0.01156	Normal kat
13	0.0013455	0.0018061	0.0015758	1.15	0.96	0.00056	0.01117	Normal kat
12	0.0012786	0.0017443	0.0015115	1.15	0.96	0.00054	0.01073	Normal kat
11	0.0012086	0.0016779	0.0014432	1.16	0.95	0.00052	0.01026	Normal kat
10	0.0011350	0.0016060	0.0013705	1.17	0.95	0.00049	0.00976	Normal kat
9	0.0010575	0.0015276	0.0012926	1.18	0.94	0.00047	0.00921	Normal kat
8	0.0009758	0.0014418	0.0012088	1.19	0.94	0.00044	0.00863	Normal kat
7	0.0008892	0.0013472	0.0011182	1.20	0.93	0.00041	0.00801	Normal kat
6	0.0007970	0.0012419	0.0010195	1.22	0.91	0.00038	0.00734	Normal kat
5	0.0006980	0.0011234	0.0009107	1.23	0.89	0.00035	0.00661	Normal kat
4	0.0005907	0.0009881	0.0007894	1.25	0.87	0.00030	0.00578	Normal kat
3	0.0004720	0.0008288	0.0006504	1.27	0.82	0.00026	0.00483	Normal kat
2	0.0003371	0.0006331	0.0004851	1.31	0.75	0.00019	0.00366	Normal kat
1	0.0001701	0.0003501	0.0002601	1.35	0.54	0.00011	0.00200	Normal kat

Y YÖNÜ (-%5)

Kat	ΔY dsol(m)	ΔY dsağ(m)	ΔY ort	nbi	nki	ΔY/h	θi	kat tipi
40	0.0022901	0.0021150	0.0022025	1.04	0.00	0.00070	0.00461	Normal kat
39	0.0023263	0.0021292	0.0022277	1.04	1.01	0.00072	0.00502	Normal kat
38	0.0023603	0.0021424	0.0022514	1.05	1.01	0.00073	0.00547	Normal kat
37	0.0023904	0.0021520	0.0022712	1.05	1.01	0.00074	0.00595	Normal kat
36	0.0024151	0.0021579	0.0022865	1.06	1.01	0.00074	0.00645	Normal kat
35	0.0024340	0.0021596	0.0022968	1.06	1.00	0.00075	0.00698	Normal kat
34	0.0024465	0.0021568	0.0023016	1.06	1.00	0.00075	0.00752	Normal kat
33	0.0024527	0.0021495	0.0023011	1.07	1.00	0.00075	0.00809	Normal kat
32	0.0024529	0.0021378	0.0022954	1.07	1.00	0.00075	0.00866	Normal kat
31	0.0024475	0.0021219	0.0022847	1.07	1.00	0.00075	0.00923	Normal kat
30	0.0024369	0.0021020	0.0022694	1.07	0.99	0.00075	0.00980	Normal kat
29	0.0024215	0.0020783	0.0022499	1.08	0.99	0.00075	0.01034	Normal kat
28	0.0024019	0.0020511	0.0022265	1.08	0.99	0.00074	0.01086	Normal kat
27	0.0023789	0.0020210	0.0021999	1.08	0.99	0.00073	0.01134	Normal kat
26	0.0023527	0.0019880	0.0021703	1.08	0.99	0.00072	0.01176	Normal kat
25	0.0023238	0.0019524	0.0021381	1.09	0.99	0.00072	0.01212	Normal kat
24	0.0022924	0.0019142	0.0021033	1.09	0.98	0.00071	0.01242	Normal kat
23	0.0022588	0.0018738	0.0020663	1.09	0.98	0.00070	0.01264	Normal kat
22	0.0022234	0.0018311	0.0020272	1.10	0.98	0.00068	0.01279	Normal kat
21	0.0021860	0.0017864	0.0019862	1.10	0.98	0.00067	0.01287	Normal kat
20	0.0021468	0.0017394	0.0019431	1.10	0.98	0.00066	0.01287	Normal kat
19	0.0021055	0.0016902	0.0018979	1.11	0.98	0.00065	0.01280	Normal kat
18	0.0020621	0.0016389	0.0018505	1.11	0.98	0.00063	0.01267	Normal kat
17	0.0020165	0.0015852	0.0018009	1.12	0.97	0.00062	0.01247	Normal kat
16	0.0019685	0.0015292	0.0017488	1.13	0.97	0.00061	0.01222	Normal kat
15	0.0019176	0.0014707	0.0016942	1.13	0.97	0.00059	0.01191	Normal kat
14	0.0018635	0.0014096	0.0016366	1.14	0.97	0.00057	0.01156	Normal kat
13	0.0018059	0.0013457	0.0015758	1.15	0.96	0.00056	0.01117	Normal kat
12	0.0017441	0.0012788	0.0015115	1.15	0.96	0.00054	0.01073	Normal kat
11	0.0016777	0.0012088	0.0014432	1.16	0.95	0.00052	0.01026	Normal kat
10	0.0016058	0.0011352	0.0013705	1.17	0.95	0.00049	0.00976	Normal kat
9	0.0015275	0.0010577	0.0012926	1.18	0.94	0.00047	0.00921	Normal kat
8	0.0014417	0.0009760	0.0012088	1.19	0.94	0.00044	0.00863	Normal kat
7	0.0013470	0.0008894	0.0011182	1.20	0.93	0.00041	0.00801	Normal kat
6	0.0012417	0.0007972	0.0010195	1.22	0.91	0.00038	0.00734	Normal kat
5	0.0011233	0.0006982	0.0009107	1.23	0.89	0.00035	0.00661	Normal kat
4	0.0009880	0.0005908	0.0007894	1.25	0.87	0.00030	0.00578	Normal kat
3	0.0008287	0.0004721	0.0006504	1.27	0.82	0.00025	0.00483	Normal kat
2	0.0006330	0.0003372	0.0004851	1.30	0.75	0.00019	0.00366	Normal kat
1	0.0003501	0.0001701	0.0002601	1.35	0.54	0.00011	0.00200	Normal kat

Kolon Kiriş sistemine ait sonuçlar;

X YÖNÜ (+%5)

Kat	ΔX üst(m)	ΔX alt(m)	ΔX ort	nbi	nki	ΔX/h	θi	kat tipi
40	0.0032578	0.0036547	0.0034562	1.06	0.00	0.00112	0.00781	Normal kat
39	0.0034230	0.0039042	0.0036636	1.07	1.06	0.00120	0.00900	Normal kat
38	0.0035948	0.0041727	0.0038837	1.07	1.06	0.00128	0.01027	Normal kat
37	0.0037518	0.0044242	0.0040880	1.08	1.05	0.00136	0.01159	Normal kat
36	0.0038890	0.0046479	0.0042685	1.09	1.04	0.00143	0.01294	Normal kat
35	0.0040077	0.0048443	0.0044260	1.09	1.04	0.00149	0.01429	Normal kat
34	0.0041100	0.0050160	0.0045630	1.10	1.03	0.00154	0.01563	Normal kat
33	0.0041980	0.0051664	0.0046822	1.10	1.03	0.00159	0.01695	Normal kat
32	0.0042738	0.0052986	0.0047862	1.11	1.02	0.00163	0.01822	Normal kat
31	0.0043388	0.0054149	0.0048768	1.11	1.02	0.00167	0.01946	Normal kat
30	0.0043944	0.0055176	0.0049560	1.11	1.02	0.00170	0.02066	Normal kat
29	0.0044411	0.0056076	0.0050244	1.12	1.01	0.00173	0.02182	Normal kat
28	0.0044795	0.0056859	0.0050827	1.12	1.01	0.00175	0.02295	Normal kat
27	0.0045097	0.0057531	0.0051314	1.12	1.01	0.00177	0.02404	Normal kat
26	0.0045321	0.0058098	0.0051710	1.12	1.01	0.00179	0.02508	Normal kat
25	0.0045473	0.0058571	0.0052022	1.13	1.01	0.00180	0.02608	Normal kat
24	0.0045555	0.0058955	0.0052255	1.13	1.00	0.00181	0.02703	Normal kat
23	0.0045578	0.0059266	0.0052422	1.13	1.00	0.00182	0.02793	Normal kat
22	0.0045543	0.0059506	0.0052525	1.13	1.00	0.00183	0.02878	Normal kat
21	0.0045457	0.0059687	0.0052572	1.14	1.00	0.00184	0.02956	Normal kat
20	0.0045320	0.0059811	0.0052565	1.14	1.00	0.00184	0.03029	Normal kat
19	0.0045131	0.0059878	0.0052505	1.14	1.00	0.00184	0.03095	Normal kat
18	0.0044888	0.0059886	0.0052387	1.14	1.00	0.00184	0.03154	Normal kat
17	0.0044590	0.0059836	0.0052213	1.15	1.00	0.00184	0.03205	Normal kat
16	0.0044236	0.0059726	0.0051981	1.15	1.00	0.00184	0.03250	Normal kat
15	0.0043824	0.0059552	0.0051688	1.15	0.99	0.00183	0.03287	Normal kat
14	0.0043348	0.0059305	0.0051326	1.16	0.99	0.00182	0.03316	Normal kat
13	0.0042804	0.0058982	0.0050893	1.16	0.99	0.00181	0.03337	Normal kat
12	0.0042188	0.0058574	0.0050381	1.16	0.99	0.00180	0.03350	Normal kat
11	0.0041490	0.0058071	0.0049781	1.17	0.99	0.00179	0.03356	Normal kat
10	0.0040702	0.0057457	0.0049079	1.17	0.99	0.00177	0.03353	Normal kat
9	0.0039816	0.0056721	0.0048269	1.18	0.98	0.00175	0.03341	Normal kat
8	0.0038826	0.0055849	0.0047338	1.18	0.98	0.00172	0.03319	Normal kat
7	0.0037720	0.0054809	0.0046265	1.18	0.98	0.00169	0.03284	Normal kat
6	0.0036464	0.0053527	0.0044996	1.19	0.97	0.00165	0.03232	Normal kat
5	0.0034974	0.0051822	0.0043398	1.19	0.96	0.00159	0.03153	Normal kat
4	0.0033019	0.0049249	0.0041134	1.20	0.95	0.00152	0.03023	Normal kat
3	0.0029969	0.0044721	0.0037345	1.20	0.91	0.00138	0.02779	Normal kat
2	0.0024076	0.0035554	0.0029815	1.19	0.80	0.00109	0.02252	Normal kat
1	0.0011679	0.0016763	0.0014221	1.18	0.48	0.00052	0.01094	Normal kat

X YÖNÜ (-%5)

Kat	ΔX düst(m)	ΔX dalt(m)	ΔX ort	nbi	nki	ΔX/h	θi	kat tipi
40	0.0033866	0.0034801	0.0034333	1.01	0.00	0.00107	0.00775	Normal kat
39	0.0035910	0.0036822	0.0036366	1.01	1.06	0.00113	0.00893	Normal kat
38	0.0038038	0.0038990	0.0038514	1.01	1.06	0.00120	0.01019	Normal kat
37	0.0039994	0.0041014	0.0040504	1.01	1.05	0.00126	0.01149	Normal kat
36	0.0041714	0.0042808	0.0042261	1.01	1.04	0.00132	0.01281	Normal kat
35	0.0043209	0.0044372	0.0043791	1.01	1.04	0.00137	0.01414	Normal kat
34	0.0044508	0.0045734	0.0045121	1.01	1.03	0.00141	0.01546	Normal kat
33	0.0045637	0.0046915	0.0046276	1.01	1.03	0.00144	0.01675	Normal kat
32	0.0046623	0.0047943	0.0047283	1.01	1.02	0.00148	0.01800	Normal kat
31	0.0047485	0.0048838	0.0048162	1.01	1.02	0.00150	0.01922	Normal kat
30	0.0048235	0.0049613	0.0048924	1.01	1.02	0.00153	0.02040	Normal kat
29	0.0048885	0.0050283	0.0049584	1.01	1.01	0.00155	0.02154	Normal kat
28	0.0049437	0.0050851	0.0050144	1.01	1.01	0.00156	0.02264	Normal kat
27	0.0049896	0.0051322	0.0050609	1.01	1.01	0.00158	0.02371	Normal kat
26	0.0050270	0.0051702	0.0050986	1.01	1.01	0.00159	0.02473	Normal kat
25	0.0050560	0.0051997	0.0051278	1.01	1.01	0.00160	0.02571	Normal kat
24	0.0050777	0.0052215	0.0051496	1.01	1.00	0.00161	0.02664	Normal kat
23	0.0050926	0.0052366	0.0051646	1.01	1.00	0.00161	0.02752	Normal kat
22	0.0051014	0.0052453	0.0051734	1.01	1.00	0.00161	0.02834	Normal kat
21	0.0051046	0.0052484	0.0051765	1.01	1.00	0.00161	0.02911	Normal kat
20	0.0051025	0.0052462	0.0051743	1.01	1.00	0.00161	0.02981	Normal kat
19	0.0050950	0.0052386	0.0051668	1.01	1.00	0.00161	0.03045	Normal kat
18	0.0050820	0.0052254	0.0051537	1.01	1.00	0.00161	0.03102	Normal kat
17	0.0050633	0.0052063	0.0051348	1.01	1.00	0.00160	0.03152	Normal kat
16	0.0050390	0.0051816	0.0051103	1.01	1.00	0.00159	0.03195	Normal kat
15	0.0050087	0.0051505	0.0050796	1.01	0.99	0.00158	0.03230	Normal kat
14	0.0049717	0.0051126	0.0050422	1.01	0.99	0.00157	0.03257	Normal kat
13	0.0049277	0.0050675	0.0049976	1.01	0.99	0.00156	0.03277	Normal kat
12	0.0048758	0.0050145	0.0049452	1.01	0.99	0.00154	0.03289	Normal kat
11	0.0048153	0.0049528	0.0048840	1.01	0.99	0.00152	0.03293	Normal kat
10	0.0047448	0.0048810	0.0048129	1.01	0.99	0.00150	0.03288	Normal kat
9	0.0046637	0.0047983	0.0047310	1.01	0.98	0.00148	0.03275	Normal kat
8	0.0045712	0.0047034	0.0046373	1.01	0.98	0.00145	0.03252	Normal kat
7	0.0044656	0.0045937	0.0045297	1.01	0.98	0.00141	0.03216	Normal kat
6	0.0043429	0.0044634	0.0044032	1.01	0.97	0.00137	0.03163	Normal kat
5	0.0041926	0.0042978	0.0042452	1.01	0.96	0.00132	0.03085	Normal kat
4	0.0039856	0.0040614	0.0040235	1.01	0.95	0.00125	0.02957	Normal kat
3	0.0036435	0.0036667	0.0036551	1.00	0.91	0.00113	0.02720	Normal kat
2	0.0029484	0.0028983	0.0029233	1.01	0.80	0.00091	0.02208	Normal kat
1	0.0014406	0.0013585	0.0013996	1.03	0.48	0.00044	0.01077	Normal kat

Y YÖNÜ (+%5)

Kat	ΔY dsol(m)	ΔY dsağ(m)	ΔY ort	nbi	nki	ΔY/h	θi	kat tipi
40	0.0035417	0.0037602	0.0036509	1.03	0.00	0.00116	0.00772	Normal kat
39	0.0037190	0.0040002	0.0038596	1.04	1.06	0.00123	0.00897	Normal kat
38	0.0039095	0.0042567	0.0040831	1.04	1.06	0.00131	0.01034	Normal kat
37	0.0040868	0.0044950	0.0042909	1.05	1.05	0.00138	0.01177	Normal kat
36	0.0042428	0.0047051	0.0044740	1.05	1.04	0.00145	0.01324	Normal kat
35	0.0043766	0.0048866	0.0046316	1.06	1.04	0.00150	0.01469	Normal kat
34	0.0044899	0.0050426	0.0047663	1.06	1.03	0.00155	0.01611	Normal kat
33	0.0045857	0.0051771	0.0048814	1.06	1.02	0.00159	0.01749	Normal kat
32	0.0046670	0.0052941	0.0049806	1.06	1.02	0.00163	0.01881	Normal kat
31	0.0047358	0.0053955	0.0050659	1.07	1.02	0.00166	0.02007	Normal kat
30	0.0047928	0.0054836	0.0051382	1.07	1.01	0.00169	0.02129	Normal kat
29	0.0048383	0.0055576	0.0051980	1.07	1.01	0.00171	0.02245	Normal kat
28	0.0048736	0.0056194	0.0052465	1.07	1.01	0.00173	0.02357	Normal kat
27	0.0048997	0.0056701	0.0052849	1.07	1.01	0.00174	0.02464	Normal kat
26	0.0049174	0.0057109	0.0053141	1.07	1.01	0.00176	0.02566	Normal kat
25	0.0049272	0.0057425	0.0053349	1.08	1.00	0.00177	0.02664	Normal kat
24	0.0049296	0.0057658	0.0053477	1.08	1.00	0.00177	0.02756	Normal kat
23	0.0049248	0.0057810	0.0053529	1.08	1.00	0.00178	0.02842	Normal kat
22	0.0049141	0.0057896	0.0053519	1.08	1.00	0.00178	0.02922	Normal kat
21	0.0048977	0.0057919	0.0053448	1.08	1.00	0.00178	0.02995	Normal kat
20	0.0048758	0.0057883	0.0053320	1.09	1.00	0.00178	0.03062	Normal kat
19	0.0048485	0.0057791	0.0053138	1.09	1.00	0.00178	0.03122	Normal kat
18	0.0048164	0.0057647	0.0052906	1.09	1.00	0.00177	0.03175	Normal kat
17	0.0047795	0.0057453	0.0052624	1.09	0.99	0.00177	0.03222	Normal kat
16	0.0047374	0.0057206	0.0052290	1.09	0.99	0.00176	0.03261	Normal kat
15	0.0046900	0.0056902	0.0051901	1.10	0.99	0.00175	0.03293	Normal kat
14	0.0046368	0.0056536	0.0051452	1.10	0.99	0.00174	0.03318	Normal kat
13	0.0045772	0.0056100	0.0050936	1.10	0.99	0.00173	0.03335	Normal kat
12	0.0045103	0.0055582	0.0050342	1.10	0.99	0.00171	0.03344	Normal kat
11	0.0044347	0.0054969	0.0049658	1.11	0.99	0.00169	0.03345	Normal kat
10	0.0043498	0.0054250	0.0048874	1.11	0.98	0.00167	0.03337	Normal kat
9	0.0042544	0.0053412	0.0047978	1.11	0.98	0.00164	0.03320	Normal kat
8	0.0041473	0.0052439	0.0046956	1.12	0.98	0.00161	0.03291	Normal kat
7	0.0040257	0.0051299	0.0045778	1.12	0.97	0.00158	0.03249	Normal kat
6	0.0038835	0.0049914	0.0044374	1.12	0.97	0.00154	0.03187	Normal kat
5	0.0037071	0.0048110	0.0042591	1.13	0.96	0.00148	0.03094	Normal kat
4	0.0034657	0.0045478	0.0040068	1.14	0.94	0.00140	0.02944	Normal kat
3	0.0030885	0.0041049	0.0035967	1.14	0.90	0.00126	0.02676	Normal kat
2	0.0024082	0.0032478	0.0028280	1.15	0.79	0.00100	0.02135	Normal kat
1	0.0011170	0.0015316	0.0013243	1.16	0.47	0.00047	0.01019	Normal kat

Y YÖNÜ (-%5)

Kat	ΔY dsol(m)	ΔY dsağ(m)	ΔY ort	nbi	nki	ΔY/h	θi	kat tipi
40	0.0037623	0.0035401	0.0036512	1.03	0.00	0.00116	0.00772	Normal kat
39	0.0040021	0.0037175	0.0038598	1.04	1.06	0.00123	0.00897	Normal kat
38	0.0042585	0.0039080	0.0040832	1.04	1.06	0.00131	0.01034	Normal kat
37	0.0044970	0.0040853	0.0042912	1.05	1.05	0.00138	0.01177	Normal kat
36	0.0047074	0.0042410	0.0044742	1.05	1.04	0.00145	0.01324	Normal kat
35	0.0048893	0.0043744	0.0046319	1.06	1.04	0.00150	0.01469	Normal kat
34	0.0050457	0.0044874	0.0047665	1.06	1.03	0.00155	0.01611	Normal kat
33	0.0051804	0.0045829	0.0048817	1.06	1.02	0.00159	0.01749	Normal kat
32	0.0052975	0.0046640	0.0049807	1.06	1.02	0.00163	0.01881	Normal kat
31	0.0053995	0.0047329	0.0050662	1.07	1.02	0.00166	0.02008	Normal kat
30	0.0054870	0.0047897	0.0051384	1.07	1.01	0.00169	0.02129	Normal kat
29	0.0055612	0.0048353	0.0051982	1.07	1.01	0.00171	0.02245	Normal kat
28	0.0056232	0.0048705	0.0052468	1.07	1.01	0.00173	0.02357	Normal kat
27	0.0056742	0.0048964	0.0052853	1.07	1.01	0.00175	0.02464	Normal kat
26	0.0057151	0.0049138	0.0053145	1.08	1.01	0.00176	0.02567	Normal kat
25	0.0057467	0.0049233	0.0053350	1.08	1.00	0.00177	0.02664	Normal kat
24	0.0057701	0.0049259	0.0053480	1.08	1.00	0.00178	0.02756	Normal kat
23	0.0057854	0.0049212	0.0053533	1.08	1.00	0.00178	0.02842	Normal kat
22	0.0057938	0.0049104	0.0053521	1.08	1.00	0.00178	0.02922	Normal kat
21	0.0057961	0.0048940	0.0053450	1.08	1.00	0.00178	0.02995	Normal kat
20	0.0057924	0.0048722	0.0053323	1.09	1.00	0.00178	0.03062	Normal kat
19	0.0057831	0.0048452	0.0053141	1.09	1.00	0.00178	0.03122	Normal kat
18	0.0057686	0.0048132	0.0052909	1.09	1.00	0.00177	0.03176	Normal kat
17	0.0057490	0.0047764	0.0052627	1.09	0.99	0.00177	0.03222	Normal kat
16	0.0057241	0.0047345	0.0052293	1.09	0.99	0.00176	0.03262	Normal kat
15	0.0056936	0.0046872	0.0051904	1.10	0.99	0.00175	0.03294	Normal kat
14	0.0056569	0.0046341	0.0051455	1.10	0.99	0.00174	0.03318	Normal kat
13	0.0056131	0.0045746	0.0050939	1.10	0.99	0.00173	0.03335	Normal kat
12	0.0055612	0.0045077	0.0050345	1.10	0.99	0.00171	0.03344	Normal kat
11	0.0054998	0.0044323	0.0049660	1.11	0.99	0.00169	0.03345	Normal kat
10	0.0054277	0.0043475	0.0048876	1.11	0.98	0.00167	0.03337	Normal kat
9	0.0053437	0.0042522	0.0047980	1.11	0.98	0.00164	0.03320	Normal kat
8	0.0052463	0.0041452	0.0046958	1.12	0.98	0.00161	0.03292	Normal kat
7	0.0051321	0.0040238	0.0045779	1.12	0.97	0.00158	0.03249	Normal kat
6	0.0049934	0.0038818	0.0044376	1.13	0.97	0.00154	0.03187	Normal kat
5	0.0048125	0.0037057	0.0042591	1.13	0.96	0.00148	0.03094	Normal kat
4	0.0045484	0.0034650	0.0040067	1.14	0.94	0.00140	0.02944	Normal kat
3	0.0041043	0.0030887	0.0035965	1.14	0.90	0.00126	0.02675	Normal kat
2	0.0032459	0.0024095	0.0028277	1.15	0.79	0.00100	0.02135	Normal kat
1	0.0015299	0.0011183	0.0013241	1.16	0.47	0.00047	0.01019	Normal kat

6- Temellere gelen yükler açısından inceleyecek olursak kolonlu kirişli sistemin temele daha büyük noktasal sabit yük ve hareketli yük aktardığı görülmektedir.

	Kolonlu kirişli sistem	Perdeli sistem
N_g	50090.03	35704.34
N_q	3167.98	2660.36

Çizelge 4.5 Temele Gelen Yükler

5. SONUÇLAR VE ÖNERİLER:

Çok katlı yapılarda, Yapının yeterli güvenliği sağlaması, yapı stabilitesindeki kararlılık, çatlama, yer değiştirme (deformasyon) gibi koşullarının yerine getirilmesi ve malzeme tasarrufu taşıyıcı sistem seçiminde en büyük etkenlerdendir. Bu da Taşıyıcı sistem tasarımının dikkatle ve gerekli özenle yapılması ile sağlanır. Bu sebepten dolayı Yapı tasarımında şu hususlara dikkat etmek gerekmektedir;

a) Mimarisi karmaşık ve düzensiz olan yapılarda ek burulmalar meydana gelir. Bu da işlemleri daha karmaşık bir hale getirir. Diğer yandan yapılar ne kadar basit düzenli ise o denli depreme dayanıklılık göstermektedir. Bu nedenle Yapılarda Simetri sağlanmalıdır.
b) Yapının rijitliğini artırmak için taşıyıcı sistem elemanlarının sürekliliğine dikkat etmek gerekir. Kolonların, kirişlerin ve perdelerin düzgün dağılımı ve sürekliliği önemlidir.
c) Bölgenin Zemin hakim periyodu ile yapının periyodu uzak tutularak rezonans olayının önüne geçilmelidir.
d) Düşey taşıyıcılar dayanımlarını kaybetmesi halinde tüm sistemin göçmesi veya burkulması gibi ani göçmelerden uzak kalmak için göçme tahkikinin önemle göz önünde bulundurulması gerekmektedir.

e) Şiddetli depremlerde yapıların elastik sınır geçip sünerek kesit zorlarında önemli artışlar olmadan şekil değiştirmesi gerekir. Böylece deprem etkisi büyük oranda

sönümlenmiş olur. Bu da yapının sünekliliği anlamına gelmektedir. Sünek taşıyıcı bir sistemde, kontrollü hasar olup, göçmeden uzak kalması sağlanır.

Tez çalışması çerçevesinde 40 kat olarak tasarlanmış olan yapının Perdeli sistem ile düzenlenmiş halinin daha rijit ve donatı kullanımı bakımından daha ekonomik olduğu sonucuna varmaktadır. Buna ilave olarak Ülke ekonomisi açısından daha ekonomik ve gerekli dayanımları sağlayan alternatif malzemelerinde incelenmesi ve daha kapsamlı çalışmaların yapılması gerektiği kanısındayız.

KAYNAKLAR

Afet Bölgelerinde Yapılacak yapılar hakkında Yönetmelik (2002), İstanbul.

Avcı, Ç. (2001), Çok Katlı Bir Yapının Çelik ve Kompozit çözümlerinin Karşılaştırılması, Yüksek Lisans Tezi, İ.T.Ü. Fen Bilimleri Enstitüsü, İstanbul.

Aydın, O.M.(2004), Çok Katlı Tüp Sistem Çerçeveli Bir Binanın Tasarımı, İstanbul.

Birink, F.E. ve Rush, P.J. (1966), "Bamboo Reinforced Concrete Construction", U.S. Naval Civil Engineering Labaoratory port Hueneme, California

Celeb, Z. (1998), Betonarme Yapılar, İstanbul.

Celeb, Z. (2001), Yapı Dinamiği, İstanbul.

Ersoy, U. (1985), Betonarme, Ankara.

Eryıldız, D. ve Başkaya, A. (2000), "Saman Balyası ile Yapılanma; Kırıkkale-Hasandede'de bir prototipin yapımı", Ankara.

Gençoğlu, M (1990), Çok Katlı Betonarme ve Kompozit Karkas Yapının Maliyet Analizi Yüksek Lisans Tezi, İ.T.Ü. Fen Bilimleri Enstitüsü, İstanbul.

Odabaşı, Y. (1997), Ahşap ve Çelik Yapı Elemanları, İstanbul.

Onaran, K. (1995), Malzeme Bilimi, İstanbul.

Özışık, G. (1997), Beton, İstanbul.

Özgen, A. Ve Sev, A. (2000), Çok Katlı Yüksek Yapılarda Taşıyıcı Sistemler, İstanbul.

Taşdemir, M.A. (2003), Betonarme Yapılarda Onarım ve Güçlendirme Malzemeleri, İnşaat mühendisleri odası, İstanbul.

TS498 (1987), Yapı Elemanlarının Boyutlandırılmasında Alınacak Yüklerin Hesap Değerleri, Ankara

TS500 (2000), Betonarme Yapıların Tasarımı ve Yapım Kuralları, Ankara

Vıest, I.M – Colaco, J.P – Furlong, R.W – Griffis, L.G – Leon, R.T – Wyllie, L.A,Jr, Composite Construction Design for Buildings, Newyork.

EKLER

EK 1 Yapının mimari planı

EK 2 Yapının kesiti

EK 3 Perdeli Taşıyıcı sistem planı

EK 4 Kolon Kiriş Taşıyıcı sistem planı

ÖZGEÇMİŞ

Adı Soyadı	Özlem VARDAR	
Doğum tarihi	18.02.1979	
Doğum yeri	İstanbul	
Lise	1993-1996	50.Yıl Tahran Lisesi
Lisans	1997-2002	İstanbul Üniversitesi Mühendislik Fakultesi İnşaat Mühendisliği Bölümü
Yüksek Lisans	2002-2005	Yıldız Teknik Üniversitesi Fen bilimleri Enstitüsü İnşaat Müh. Anabilimdalı, Mekanik programı